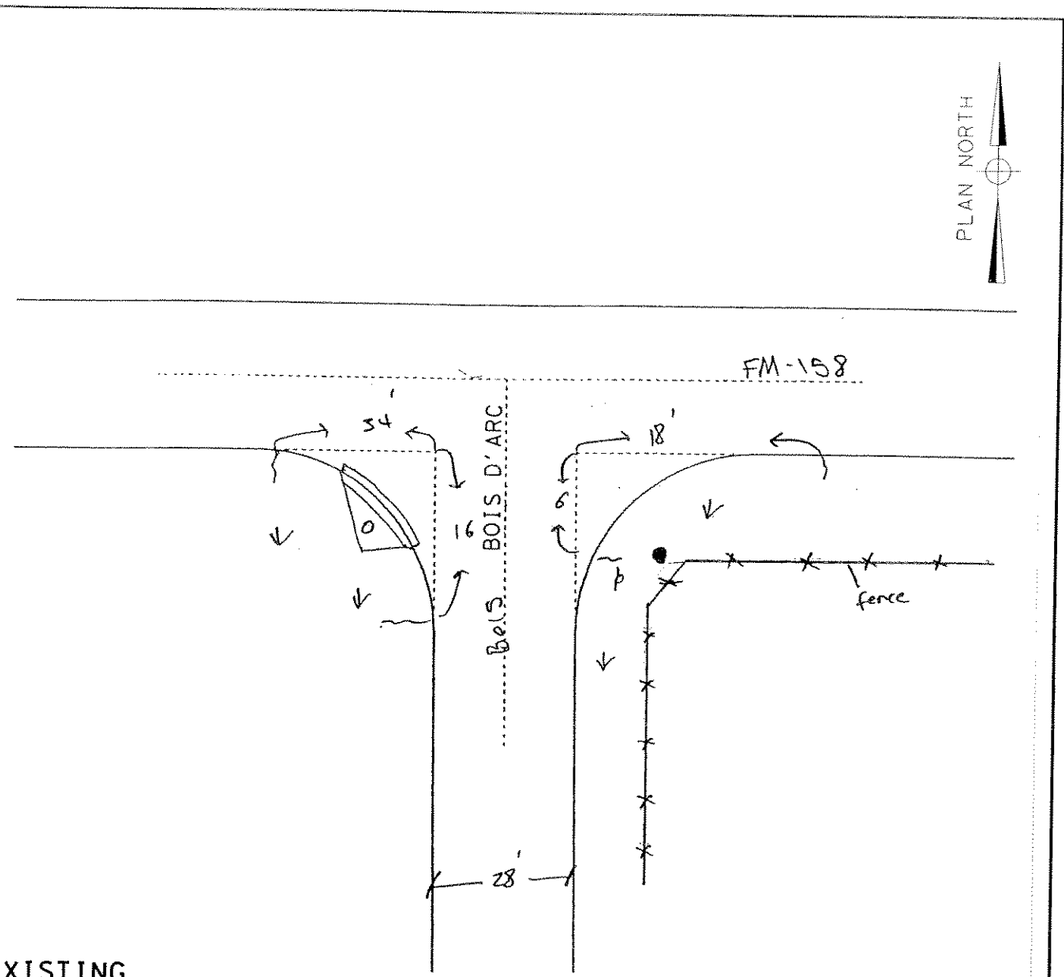

EXISTING

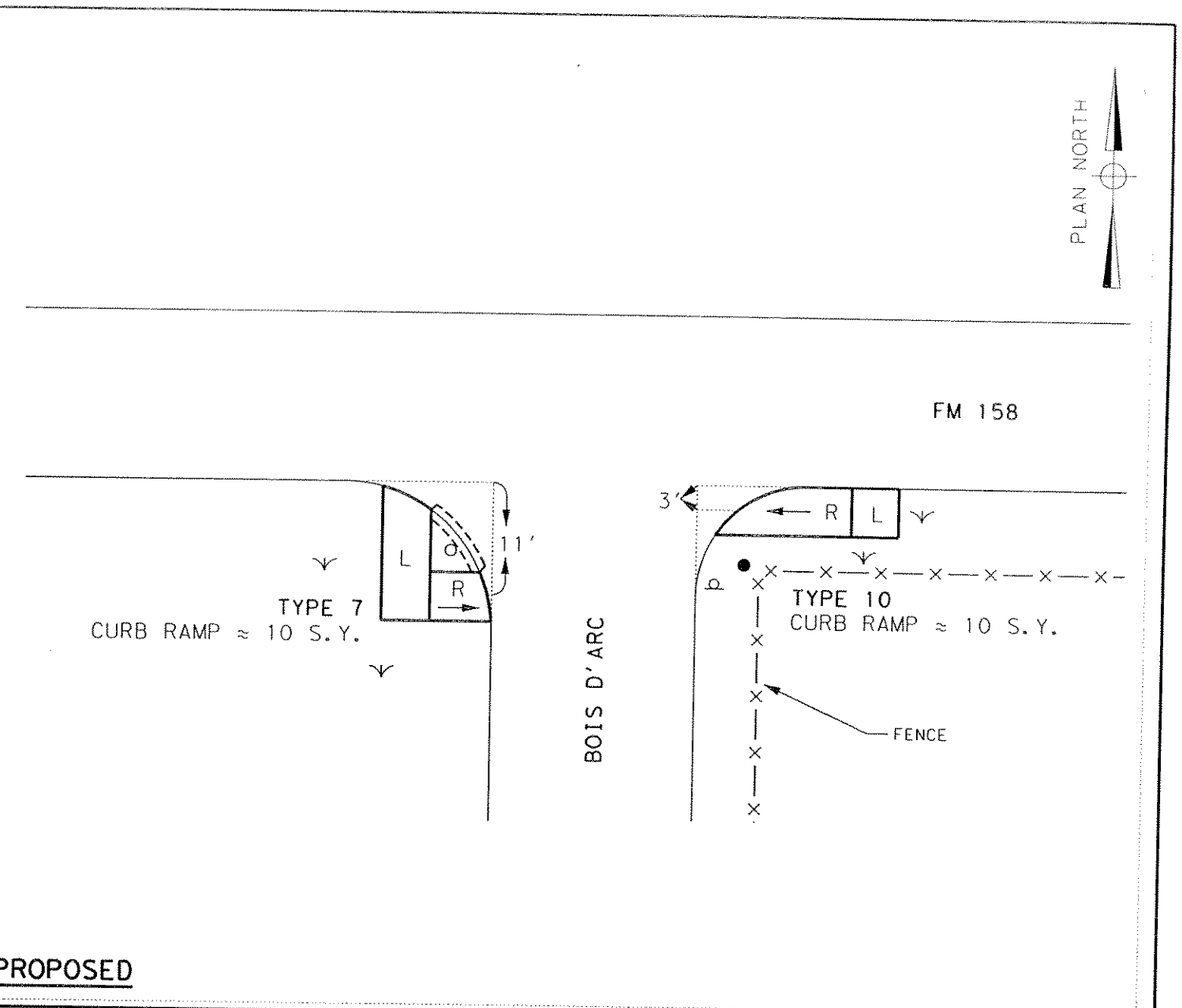

PROPOSED

LEGEND

- ● PP = POWER POLE
- GA = GUY ANCHOR
- TP = EX. TRAF. SIGNAL POLE
- PB = PED BUTTON
- Ⓟ = NEW PED POLE W/ PED BUTTON
- GB = GROUND BOX
- EL = ELECTRICAL PEDESTAL/BOX
- LP = LIGHT POLE
- FH = FIRE HYDRANT
- WV = WATER VALVE
- MH = MANHOLE
- IN = INLET
- TR = TREE
- SH = SHRUB; = GRASS
- SN = SIGN; = NEW CONDUIT
- CL = CONSTRUCTION LIMITS
- ER = EXIST RAMP; SW = SIDEWALK
- L = LANDING; R = RAMP
- F = FLARE; T = TRANSITION
- RC = REPLACE CURB/CURB & GUTTER

ITEM DESCRIPTION	UNIT	QUANT.
RETROFIT DETECTABLE WARNING SURFACE	EA	
REPLACE CONC CURB	LF	
CONC SIDEWALKS (6")	SY	
REMOVING CONC (CURB & GUTTER)	LF	
ELEC CONDR BARE	LF	
CONDT (PVC)	LF	
TRF SIG CBL	LF	
PED DETECT (2 INCH PUSH BTN)	EA	
REMOVAL OF PEDESTRIAN PUSH BUTTONS	EA	
PED POLE ASSEMBLY	EA	
RELOC SM RD SN&AM(TY 10 BWG)	EA	
REF PAV MRK TY 1(W)12"(SLD)	LF	
REF PAV MRK TY 1(W)24"(SLD)	LF	
ELIM EXT PAV MRK & MRKS 12"	LF	
ELIM EXT PAV MRK & MRKS 24"	LF	

ITEM DESCRIPTION	UNIT	QUANT.
CURB RAMPS (TY 1) *	EA	
CURB RAMPS (TY 2) *	EA	
CURB RAMPS (TY 3) *	EA	
CURB RAMPS (TY 4) *	EA	
CURB RAMPS (TY 5) *	EA	
CURB RAMPS (TY 6) *	EA	
CURB RAMPS (TY 7) *	EA	1
CURB RAMPS (TY 9) *	EA	
CURB RAMPS (TY 10) *	EA	1
CURB RAMPS (TY 20) *	EA	
CURB RAMPS (TY 21) *	EA	
CURB RAMPS (TY 22) *	EA	
CURB RAMPS	SY	20
ADJ MANHS	EA	
REPLACE GROUND BOX	EA	
RAIL (HANDRAIL)	LF	
DRIVEWAYS (CONC)	SY	
ADJUST METER BOX TO GRADE	EA	

ITEM DESCRIPTION	UNIT	QUANT.
COMPOST MANUF TOPSOIL	SY	4
EXCAVATION (SPECIAL)	CY	
BLOCK SODDING	SY	4

* = FOR CONTRACTOR'S INFORMATION "ONLY" NON-PAY ITEM

STATE OF TEXAS
SCOTT E DUKETTE
83615
LICENSED
PROFESSIONAL ENGINEER
11/19/07

N. T. S.

Texas Department of Transportation
©2007

H.R.Gray For Construction Success

klotz associates

ADA CURB RAMP PROGRAM
BRYAN, TEXAS
FM 158 AT
BOIS D'ARC

DN: AJS	FED. RD. DIV. NO.	STATE	STATE PROJECT NO.		HIGHWAY NO.
CK DN: SAS	6	TEXAS			VARIES
DW: GWG					
CK DW: MS/SB	STATE DIST.	COUNTY	CONTROL NO.	SECTION NO.	JOB NO. / SHEET NO.
TR:	BRY	WALKER, ETC.	0917	27	035, ETC. / 96
CK TR:					

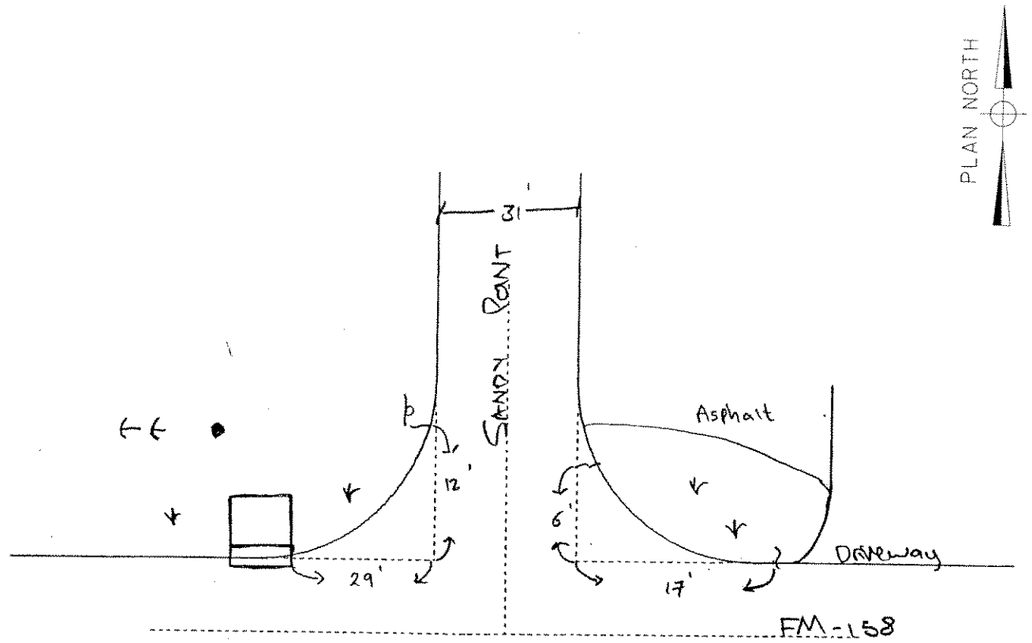

EXISTING

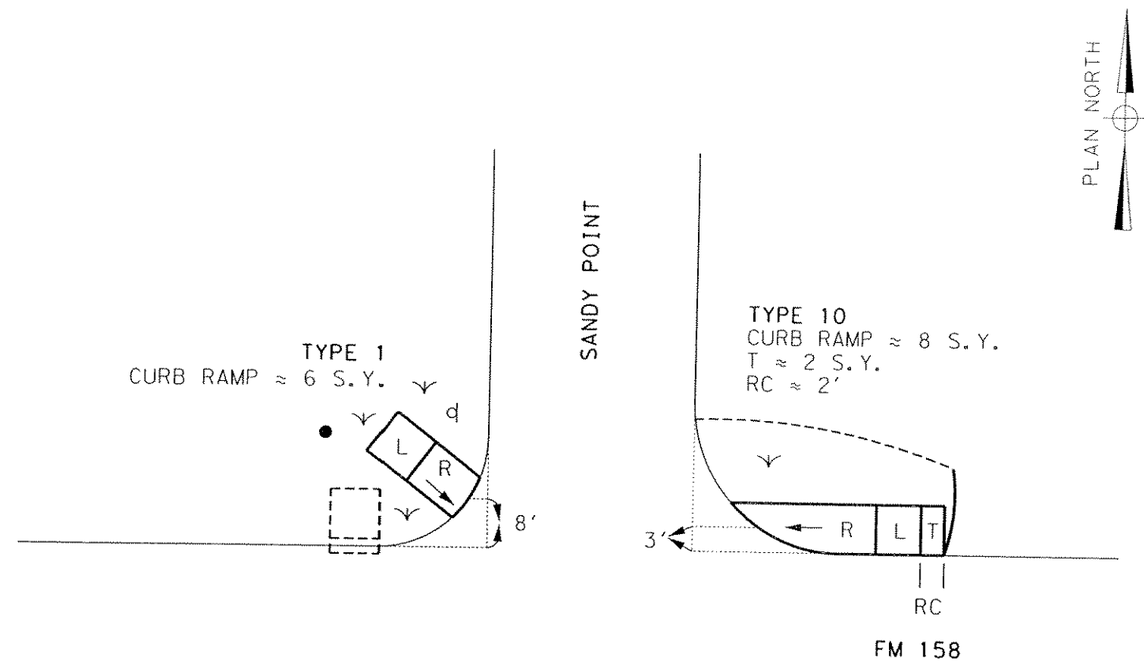

PROPOSED

LEGEND

- ● PP = POWER POLE
- GA = GUY ANCHOR
- TP = EX. TRAF. SIGNAL POLE
- PB = PED BUTTON
- Ⓟ = NEW PED POLE W/ PED BUTTON
- GB = GROUND BOX
- EL = ELECTRICAL PEDESTAL/BOX
- LP = LIGHT POLE
- FH = FIRE HYDRANT
- WV = WATER VALVE
- MH = MANHOLE
- IN = INLET
- TR = TREE
- SH = SHRUB; = GRASS
- SN = SIGN; = NEW CONDUIT
- CL = CONSTRUCTION LIMITS
- ER = EXIST RAMP; SW = SIDEWALK
- L = LANDING; R = RAMP
- F = FLARE; T = TRANSITION
- RC = REPLACE CURB/CURB & GUTTER

ITEM DESCRIPTION	UNIT	QUANT.
RETROFIT DETECTABLE WARNING SURFACE	EA	
REPLACE CONC CURB	LF	2
CONC SIDEWALKS (6")	SY	2
REMOVING CONC (CURB & GUTTER)	LF	2
ELEC CONDR BARE	LF	
CONDT (PVC)	LF	
TRF SIG CBL	LF	
PED DETECT (2 INCH PUSH BTN)	EA	
REMOVAL OF PEDESTRIAN PUSH BUTTONS	EA	
PED POLE ASSEMBLY	EA	
RELOC SM RD SN&AM(TY 10 BWG)	EA	
REF PAV MRK TY 1(W)12"(SLD)	LF	
REF PAV MRK TY 1(W)24"(SLD)	LF	
ELIM EXT PAV MRK & MRKS 12"	LF	
ELIM EXT PAV MRK & MRKS 24"	LF	

ITEM DESCRIPTION	UNIT	QUANT.
CURB RAMPS (TY 1) *	EA	1
CURB RAMPS (TY 2) *	EA	
CURB RAMPS (TY 3) *	EA	
CURB RAMPS (TY 4) *	EA	
CURB RAMPS (TY 5) *	EA	
CURB RAMPS (TY 6) *	EA	
CURB RAMPS (TY 7) *	EA	
CURB RAMPS (TY 9) *	EA	
CURB RAMPS (TY 10) *	EA	1
CURB RAMPS (TY 20) *	EA	
CURB RAMPS (TY 21) *	EA	
CURB RAMPS (TY 22) *	EA	
CURB RAMPS	SY	14
ADJ MANHS	EA	
REPLACE GROUND BOX	EA	
RAIL (HANDRAIL)	LF	
DRIVEWAYS (CONC)	SY	
ADJUST METER BOX TO GRADE	EA	

ITEM DESCRIPTION	UNIT	QUANT.
COMPOST MANUF TOPSOIL	SY	5
EXCAVATION (SPECIAL)	CY	
BLOCK SODDING	SY	5

* = FOR CONTRACTOR'S INFORMATION "ONLY" NON-PAY ITEM

STATE OF TEXAS
SCOTT E DUKETTE
83615
LICENSED
PROFESSIONAL ENGINEER
12/6/07

N. T. S.

Texas Department of Transportation
©2007

H.R.Gray For Construction Success

klotz associates

ADA CURB RAMP PROGRAM
BRYAN, TEXAS
FM 158 AT
SANDY POINT

DN: AJS	FED. RD. DIV. NO.	STATE	STATE PROJECT NO.		HIGHWAY NO.
CK DN: SAS	6	TEXAS			VARIES
DW: GWG	STATE DIST.	COUNTY	CONTROL NO.	SECTION NO.	JOB NO. / SHEET NO.
CK DW: MS/SD	BRY	WALKER, ETC.	0917	27	035, ETC. / 97

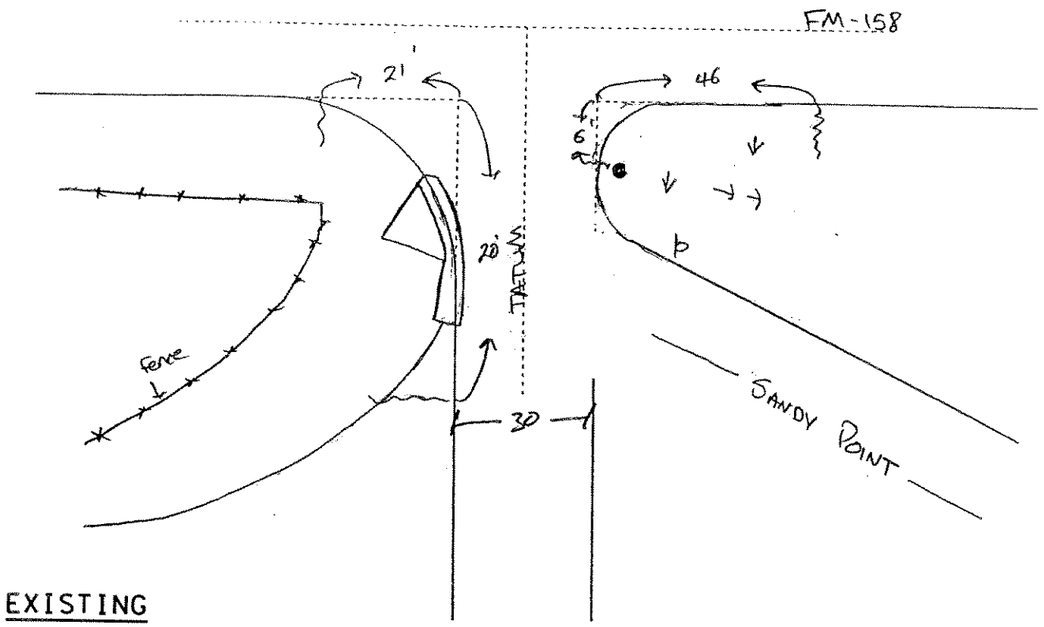

EXISTING

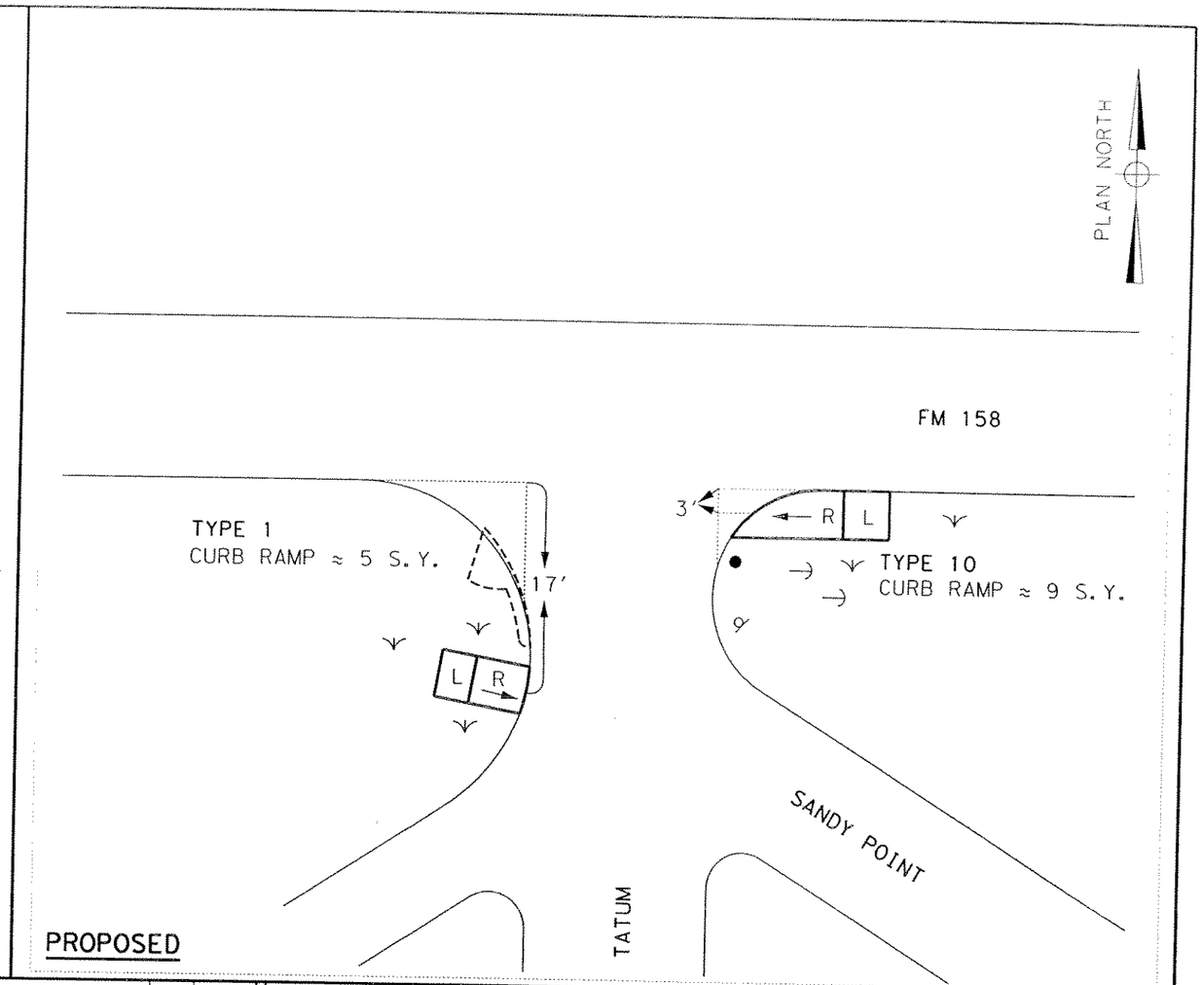

PROPOSED

LEGEND

- ● PP = POWER POLE
- GA = GUY ANCHOR
- TP = EX. TRAF. SIGNAL POLE
- PB = PED BUTTON
- Ⓟ = NEW PED POLE W/ PED BUTTON
- GB = GROUND BOX
- EL = ELECTRICAL PEDESTAL/BOX
- LP = LIGHT POLE
- FH = FIRE HYDRANT
- WV = WATER VALVE
- MH = MANHOLE
- IN = INLET
- TR = TREE
- SH = SHRUB; = GRASS
- SN = SIGN; = NEW CONDUIT
- CL = CONSTRUCTION LIMITS
- ER = EXIST RAMP; SW = SIDEWALK
- L = LANDING; R = RAMP
- F = FLARE; T = TRANSITION
- RC = REPLACE CURB/CURB & GUTTER

ITEM DESCRIPTION	UNIT	QUANT.
RETROFIT DETECTABLE WARNING SURFACE	EA	
REPLACE CONC CURB	LF	
CONC SIDEWALKS (6")	SY	
REMOVING CONC (CURB & GUTTER)	LF	
ELEC CONDR BARE	LF	
CONDT (PVC)	LF	
TRF SIG CBL	LF	
PED DETECT (2 INCH PUSH BTN)	EA	
REMOVAL OF PEDESTRIAN PUSH BUTTONS	EA	
PED POLE ASSEMBLY	EA	
RELOC SM RD SN&AM(TY 10 BWG)	EA	
REF PAV MRK TY 1(W)12"(SLD)	LF	
REF PAV MRK TY 1(W)24"(SLD)	LF	
ELIM EXT PAV MRK & MRKS 12"	LF	
ELIM EXT PAV MRK & MRKS 24"	LF	

ITEM DESCRIPTION	UNIT	QUANT.
CURB RAMPS (TY 1) *	EA	1
CURB RAMPS (TY 2) *	EA	
CURB RAMPS (TY 3) *	EA	
CURB RAMPS (TY 4) *	EA	
CURB RAMPS (TY 5) *	EA	
CURB RAMPS (TY 6) *	EA	
CURB RAMPS (TY 7) *	EA	
CURB RAMPS (TY 9) *	EA	
CURB RAMPS (TY 10) *	EA	1
CURB RAMPS (TY 20) *	EA	
CURB RAMPS (TY 21) *	EA	
CURB RAMPS (TY 22) *	EA	
CURB RAMPS	SY	14
ADJ MANHS	EA	
REPLACE GROUND BOX	EA	
RAIL (HANDRAIL)	LF	
DRIVEWAYS (CONC)	SY	
ADJUST METER BOX TO GRADE	EA	

ITEM DESCRIPTION	UNIT	QUANT.
COMPOST MANUF TOPSOIL	SY	5
EXCAVATION (SPECIAL)	CY	
BLOCK SODDING	SY	5

* = FOR CONTRACTOR'S INFORMATION "ONLY" NON-PAY ITEM

STATE OF TEXAS
SCOTT E DUKETTE
83615
LICENSED
PROFESSIONAL ENGINEER
11/19/07

N. T. S.

Texas Department of Transportation
©2007

H.R.Gray For Construction Success

klotz associates

ADA CURB RAMP PROGRAM
BRYAN, TEXAS
FM 158 AT
TATUM/SANDY POINT

DN: AJG	FED. RD. DIV. NO.	STATE	STATE PROJECT NO.		HIGHWAY NO.
CK DN: SAS	6	TEXAS			VARIES
DN: DWC	STATE DIST.	COUNTY	CONTROL NO.	SECTION NO.	JOB NO. / SHEET NO.
CK DN: MS/SD	BRY	WALKER, ETC.	0917	27	035, ETC. / 98
TR:					
CK TR:					

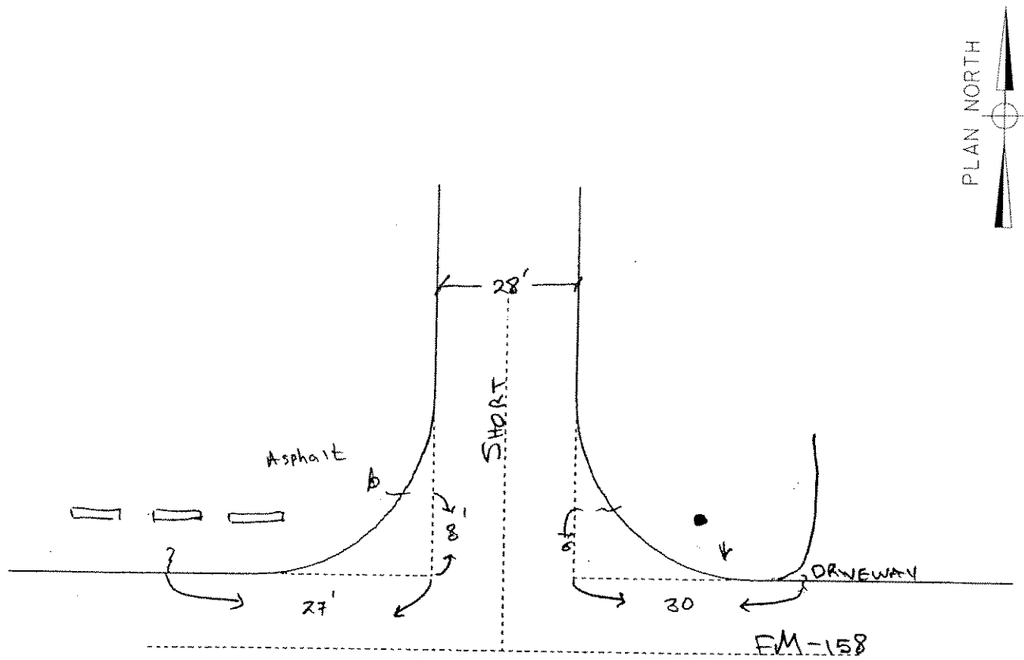

EXISTING

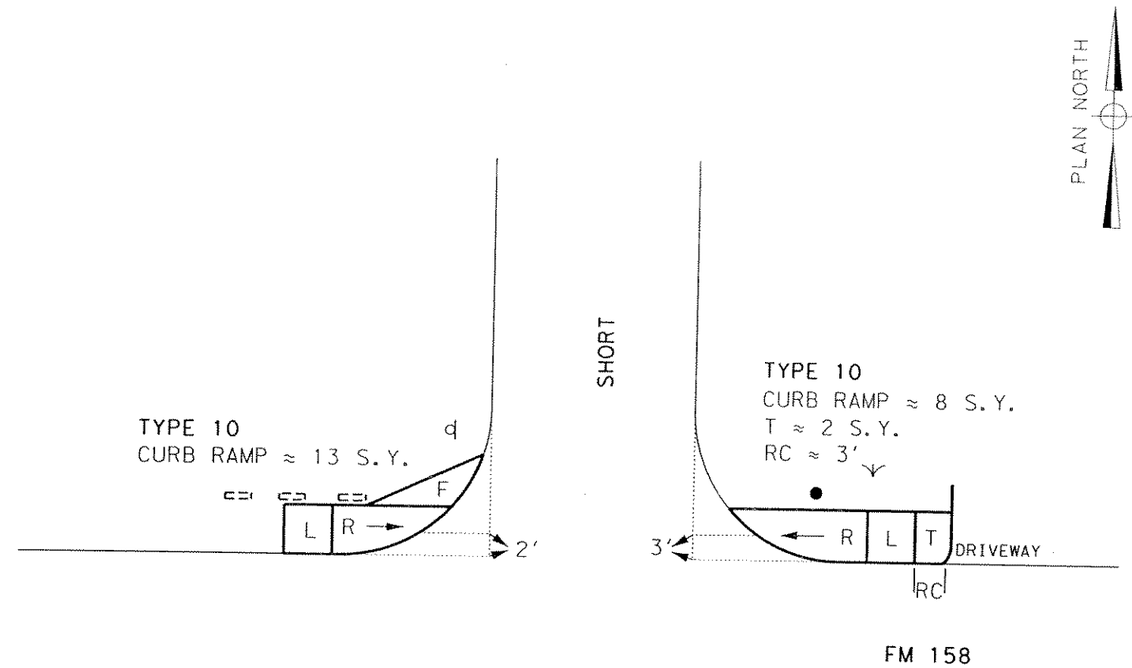

PROPOSED

LEGEND

- PP = POWER POLE
- GA = GUY ANCHOR
- TP = EX. TRAF. SIGNAL POLE
- PB = PED BUTTON
- (P) = NEW PED POLE W/ PED BUTTON
- GB = GROUND BOX
- EL = ELECTRICAL PEDESTAL/BOX
- LP = LIGHT POLE
- FH = FIRE HYDRANT
- WV = WATER VALVE
- MH = MANHOLE
- IN = INLET
- TR = TREE
- SH = SHRUB; = GRASS
- SN = SIGN; = NEW CONDUIT
- CL = CONSTRUCTION LIMITS
- ER = EXIST RAMP; SW = SIDEWALK
- L = LANDING; R = RAMP
- F = FLARE; T = TRANSITION
- RC = REPLACE CURB/CURB & GUTTER

ITEM DESCRIPTION	UNIT	QUANT.
RETROFIT DETECTABLE WARNING SURFACE	EA	
REPLACE CONC CURB	LF	3
CONC SIDEWALKS (6")	SY	2
REMOVING CONC (CURB & GUTTER)	LF	3
ELEC CONDR BARE	LF	
CONDT (PVC)	LF	
TRF SIG CBL	LF	
PED DETECT (2 INCH PUSH BTN)	EA	
REMOVAL OF PEDESTRIAN PUSH BUTTONS	EA	
PED POLE ASSEMBLY	EA	
RELOC SM RD SN&AM(TY 10 BWG)	EA	
REF PAV MRK TY 1(W)12"(SLD)	LF	
REF PAV MRK TY 1(W)24"(SLD)	LF	
ELIM EXT PAV MRK & MRKS 12"	LF	
ELIM EXT PAV MRK & MRKS 24"	LF	

ITEM DESCRIPTION	UNIT	QUANT.
CURB RAMPS (TY 1) *	EA	
CURB RAMPS (TY 2) *	EA	
CURB RAMPS (TY 3) *	EA	
CURB RAMPS (TY 4) *	EA	
CURB RAMPS (TY 5) *	EA	
CURB RAMPS (TY 6) *	EA	
CURB RAMPS (TY 7) *	EA	
CURB RAMPS (TY 9) *	EA	
CURB RAMPS (TY 10) *	EA	2
CURB RAMPS (TY 20) *	EA	
CURB RAMPS (TY 21) *	EA	
CURB RAMPS (TY 22) *	EA	
CURB RAMPS	SY	21
ADJ MANHS	EA	
REPLACE GROUND BOX	EA	
RAIL (HANDRAIL)	LF	
DRIVEWAYS (CONC)	SY	
ADJUST METER BOX TO GRADE	EA	

ITEM DESCRIPTION	UNIT	QUANT.
COMPOST MANUF TOPSOIL	SY	2
EXCAVATION (SPECIAL)	CY	
BLOCK SODDING	SY	2

* = FOR CONTRACTOR'S INFORMATION "ONLY" NON-PAY ITEM

STATE OF TEXAS
SCOTT E DUKETTE
83615
LICENSED
PROFESSIONAL ENGINEER
12/6/07

N. T. S.

Texas Department of Transportation
©2007

H.R.Gray For Construction Success

klotz associates

ADA CURB RAMP PROGRAM
BRYAN, TEXAS
FM 158 AT
SHORT

DN: AJS	FED. RD. DIV. NO.	STATE	STATE PROJECT NO.		HIGHWAY NO.
CK DN: SAS	6	TEXAS			VARIES
DW: GWG	STATE DIST.	COUNTY	CONTROL NO.	SECTION NO.	JOB NO. / SHEET NO.
CK DW: MS/SD	BRY	WALKER, ETC.	0917	27	035, ETC. / 99
TR:					
CK TR:					

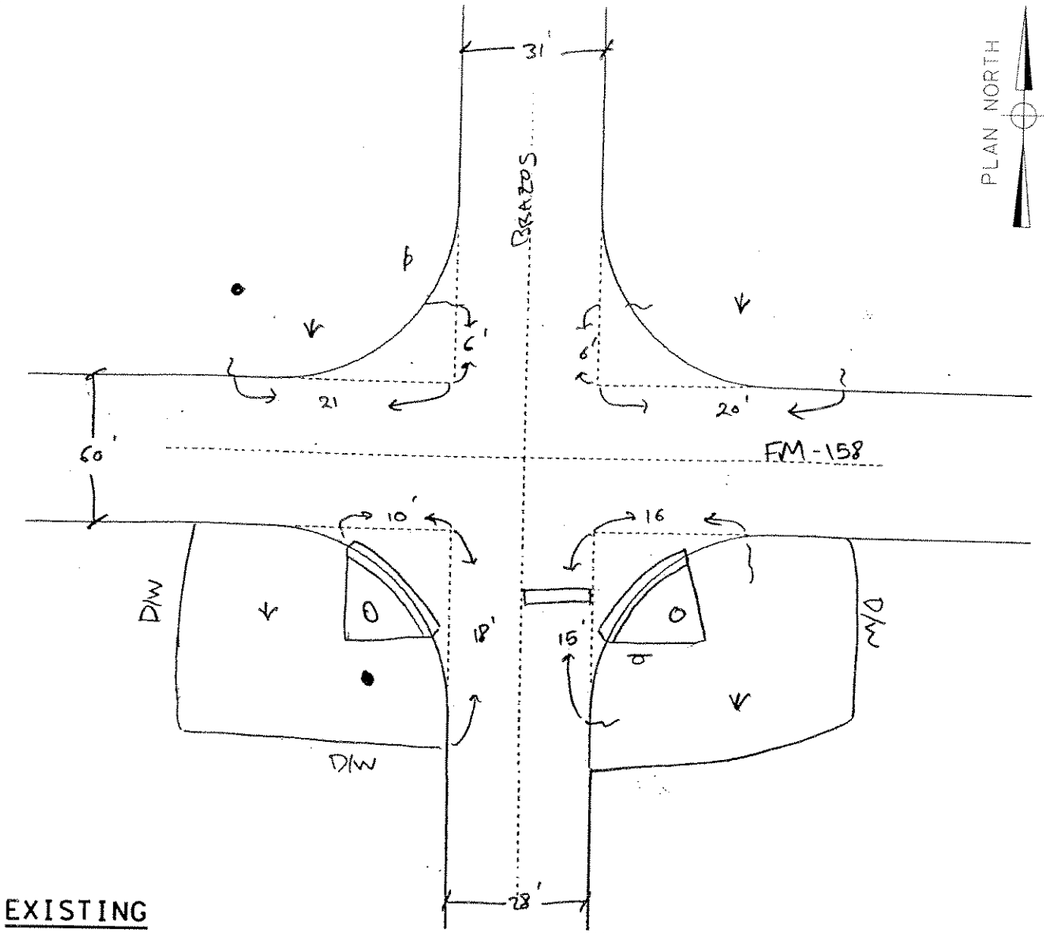

EXISTING

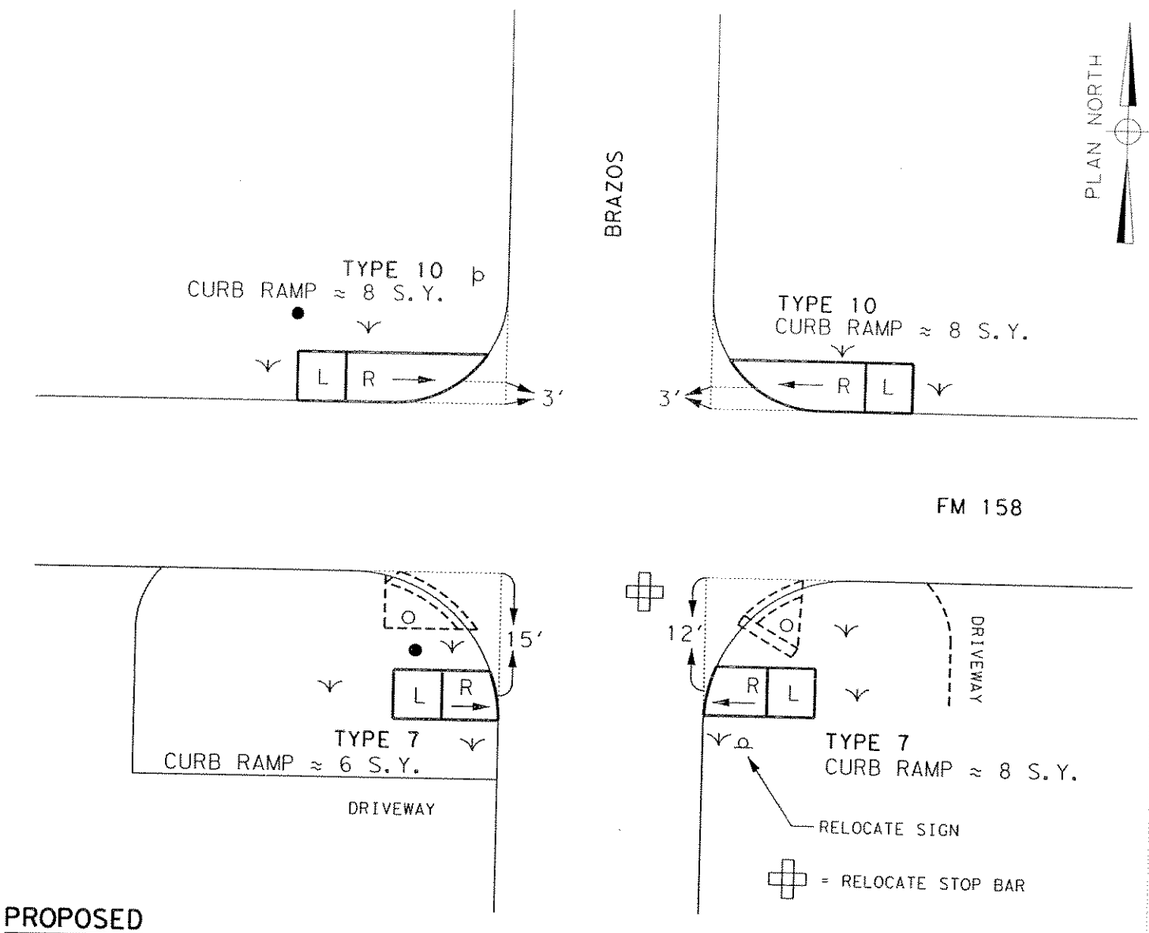

PROPOSED

LEGEND

- ● PP = POWER POLE
- GA = GUY ANCHOR
- TP = EX. TRAF.. SIGNAL POLE
- PB = PED BUTTON
- Ⓟ = NEW PED POLE W/ PED BUTTON
- GB = GROUND BOX
- EL = ELECTRICAL PEDESTAL/BOX
- LP = LIGHT POLE
- FH = FIRE HYDRANT
- WV = WATER VALVE
- MH = MANHOLE
- IN = INLET
- TR = TREE
- SH = SHRUB; = GRASS
- SN = SIGN; = NEW CONDUIT
- CL = CONSTRUCTION LIMITS
- ER = EXIST RAMP; SW = SIDEWALK
- L = LANDING; R = RAMP
- F = FLARE; T = TRANSITION
- RC = REPLACE CURB/CURB & GUTTER

ITEM DESCRIPTION	UNIT	QUANT.
RETROFIT DETECTABLE WARNING SURFACE	EA	
REPLACE CONC CURB	LF	
CONC SIDEWALKS (6")	SY	
REMOVING CONC (CURB & GUTTER)	LF	
ELEC CONDR BARE	LF	
CONDT (PVC)	LF	
TRF SIG CBL	LF	
PED DETECT (2 INCH PUSH BTN)	EA	
REMOVAL OF PEDESTRIAN PUSH BUTTONS	EA	
PED POLE ASSEMBLY	EA	
RELOC SM RD SN&AM(TY 10 BWG)	EA	1
REF PAV MRK TY 1(W)12"(SLD)	LF	
REF PAV MRK TY 1(W)24"(SLD)	LF	14
ELIM EXT PAV MRK & MRKS 12"	LF	
ELIM EXT PAV MRK & MRKS 24"	LF	14

ITEM DESCRIPTION	UNIT	QUANT.
CURB RAMPS (TY 1) *	EA	
CURB RAMPS (TY 2) *	EA	
CURB RAMPS (TY 3) *	EA	
CURB RAMPS (TY 4) *	EA	
CURB RAMPS (TY 5) *	EA	
CURB RAMPS (TY 6) *	EA	
CURB RAMPS (TY 7) *	EA	2
CURB RAMPS (TY 9) *	EA	
CURB RAMPS (TY 10) *	EA	2
CURB RAMPS (TY 20) *	EA	
CURB RAMPS (TY 21) *	EA	
CURB RAMPS (TY 22) *	EA	
CURB RAMPS	SY	30
ADJ MANHS	EA	
REPLACE GROUND BOX	EA	
RAIL (HANDRAIL)	LF	
DRIVEWAYS (CONC)	SY	
ADJUST METER BOX TO GRADE	EA	

ITEM DESCRIPTION	UNIT	QUANT.
COMPOST MANUF TOPSOIL	SY	11
EXCAVATION (SPECIAL)	CY	
BLOCK SODDING	SY	11

* = FOR CONTRACTOR'S INFORMATION "ONLY" NON-PAY ITEM

STATE OF TEXAS
SCOTT E DUKETTE
83615
LICENSED
PROFESSIONAL ENGINEER
11/19/07

N. T. S.

Texas Department of Transportation
©2007

H.R.Gray For Construction Success

klotz associates

ADA CURB RAMP PROGRAM
BRYAN, TEXAS
FM 158 AT
BRAZOS

DN: AJS	FED. RD. DIV. NO.	STATE	STATE PROJECT NO.			HIGHWAY NO.
CK DN: SAS	6	TEXAS				VARIES
DW: GWG	STATE DIST.	COUNTY	CONTROL NO.	SECTION NO.	JOB NO.	SHEET NO.
CK DW: WS/SD	BRY	WALKER, ETC.	0917	27	035, ETC.	100
TR:						
CK TR:						

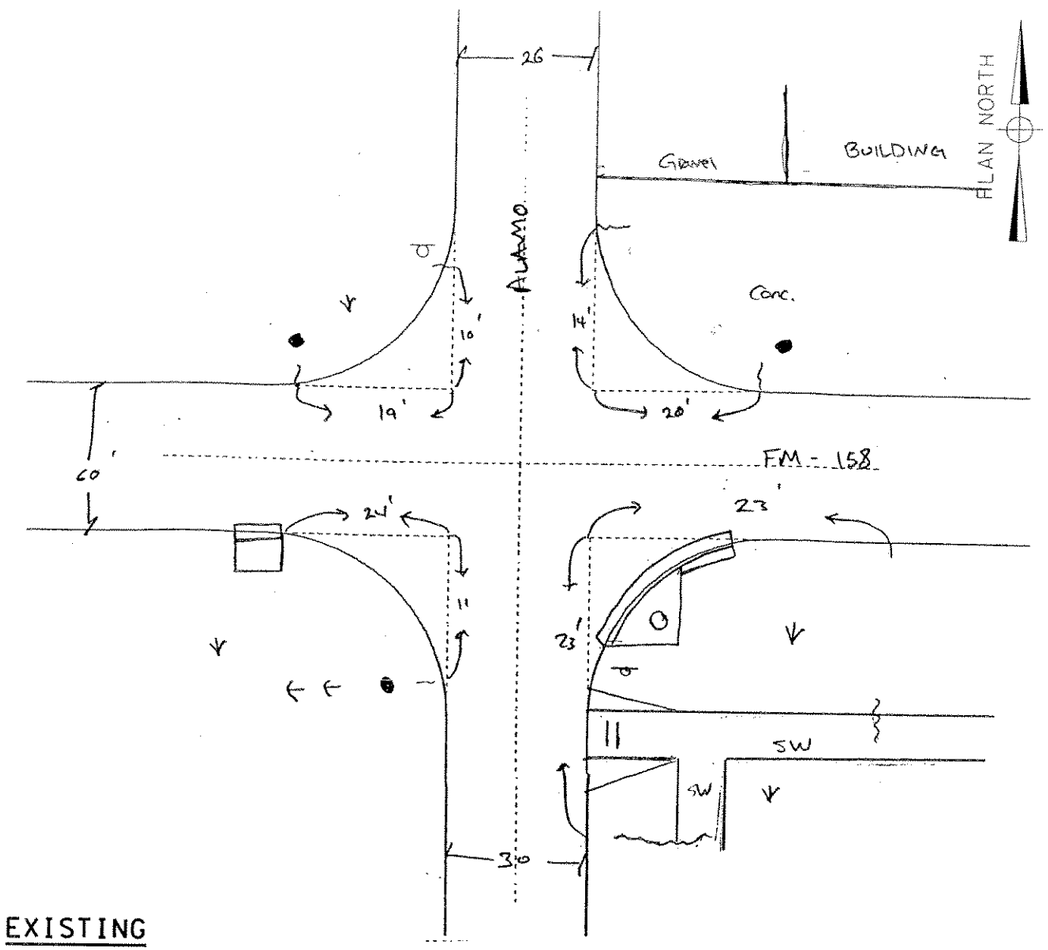

EXISTING

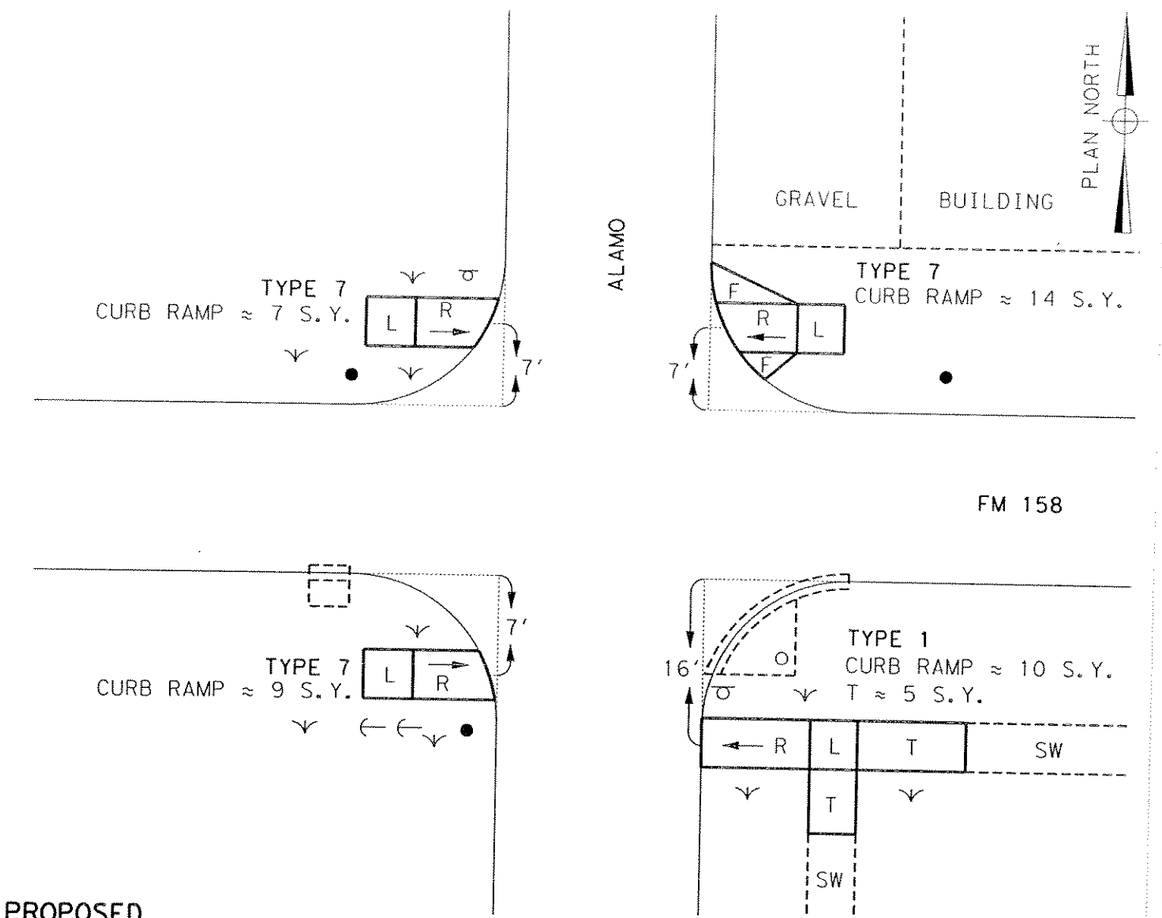

PROPOSED

LEGEND

- ● PP = POWER POLE
- GA = GUY ANCHOR
- TP = EX. TRAF. SIGNAL POLE
- PB = PED BUTTON
- Ⓟ = NEW PED POLE W/ PED BUTTON
- GB = GROUND BOX
- EL = ELECTRICAL PEDESTAL/BOX
- LP = LIGHT POLE
- FH = FIRE HYDRANT
- WV = WATER VALVE
- MH = MANHOLE
- IN = INLET
- TR = TREE
- SH = SHRUB; = GRASS
- SN = SIGN; ····· = NEW CONDUIT
- CL = CONSTRUCTION LIMITS
- ER = EXIST RAMP; SW = SIDEWALK
- L = LANDING; R = RAMP
- F = FLARE; T = TRANSITION
- RC = REPLACE CURB/CURB & GUTTER

ITEM DESCRIPTION	UNIT	QUANT.
RETROFIT DETECTABLE WARNING SURFACE	EA	
REPLACE CONC CURB	LF	
CONC SIDEWALKS (6")	SY	5
REMOVING CONC (CURB & GUTTER)	LF	
ELEC CONDR BARE	LF	
CONDT (PVC)	LF	
TRF SIG CBL	LF	
PED DETECT (2 INCH PUSH BTN)	EA	
REMOVAL OF PEDESTRIAN PUSH BUTTONS	EA	
PED POLE ASSEMBLY	EA	
RELOC SM RD SN&AM(TY 10 BWG)	EA	
REF PAV MRK TY 1(W)12"(SLD)	LF	
REF PAV MRK TY 1(W)24"(SLD)	LF	
ELIM EXT PAV MRK & MRKS 12"	LF	
ELIM EXT PAV MRK & MRKS 24"	LF	

ITEM DESCRIPTION	UNIT	QUANT.
CURB RAMPS (TY 1) *	EA	1
CURB RAMPS (TY 2) *	EA	
CURB RAMPS (TY 3) *	EA	
CURB RAMPS (TY 4) *	EA	
CURB RAMPS (TY 5) *	EA	
CURB RAMPS (TY 6) *	EA	
CURB RAMPS (TY 7) *	EA	3
CURB RAMPS (TY 9) *	EA	
CURB RAMPS (TY 10) *	EA	
CURB RAMPS (TY 20) *	EA	
CURB RAMPS (TY 21) *	EA	
CURB RAMPS (TY 22) *	EA	
CURB RAMPS	SY	40
ADJ MANHS	EA	
REPLACE GROUND BOX	EA	
RAIL (HANDRAIL)	LF	
DRIVEWAYS (CONC)	SY	
ADJUST METER BOX TO GRADE	EA	

ITEM DESCRIPTION	UNIT	QUANT.
COMPOST MANUF TOPSOIL	SY	14
EXCAVATION (SPECIAL)	CY	
BLOCK SODDING	SY	14

* = FOR CONTRACTOR'S INFORMATION "ONLY" NON-PAY ITEM

STATE OF TEXAS
SCOTT E DUKETTE
83615
LICENSED
PROFESSIONAL ENGINEER
11/19/07

N. T. S.

Texas Department of Transportation
©2007

H.R.Gray For Construction Success

klotz associates

ADA CURB RAMP PROGRAM
BRYAN, TEXAS
FM 158 AT
ALAMO

DN: AJS	FED. RD. DIV. NO.	STATE	STATE PROJECT NO.		HIGHWAY NO.
CK DN: SAS	6	TEXAS			VARIES
DW: GMG	STATE DIST.	COUNTY	CONTROL NO.	SECTION NO.	JOB NO. / SHEET NO.
CK DW: MS/SS	BRY	WALKER, ETC.	0917	27	035, ETC / 101

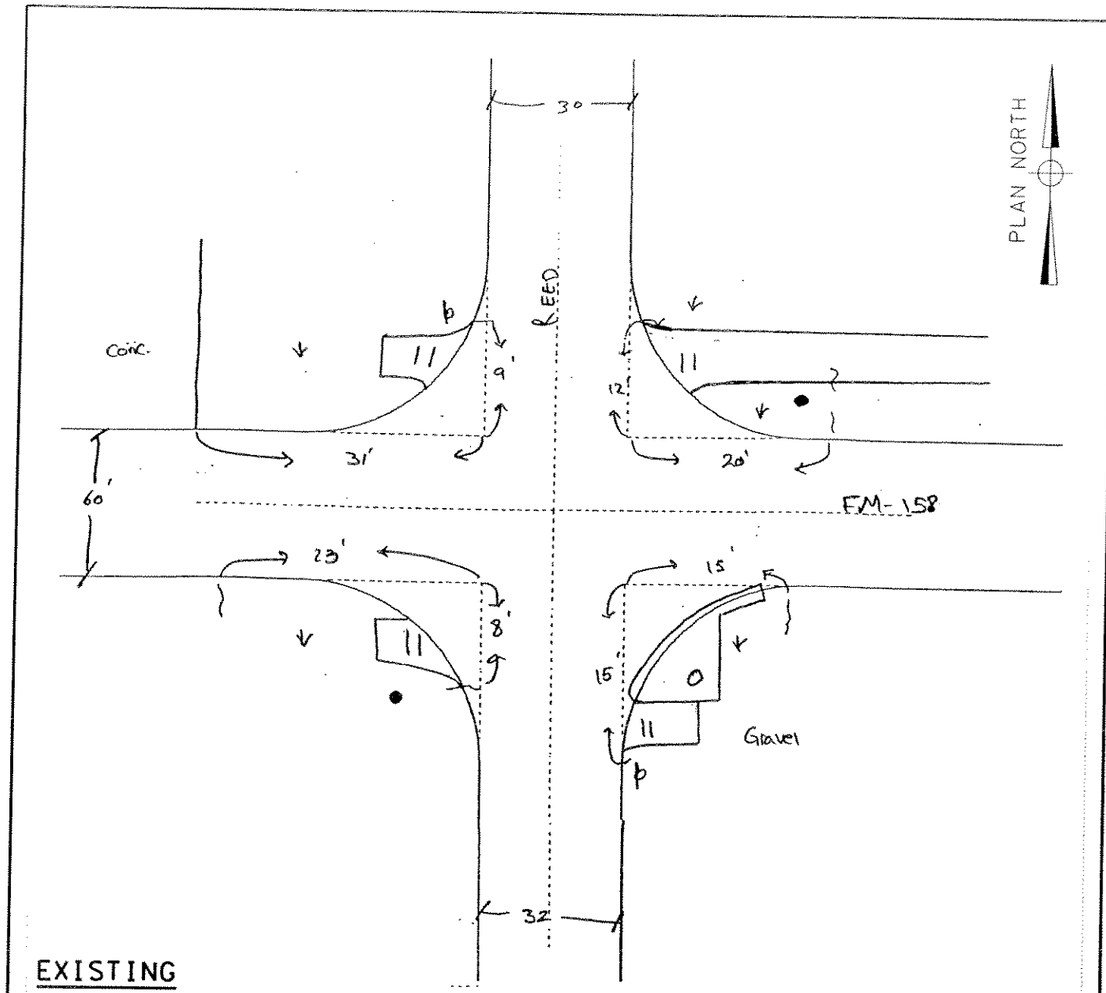

EXISTING

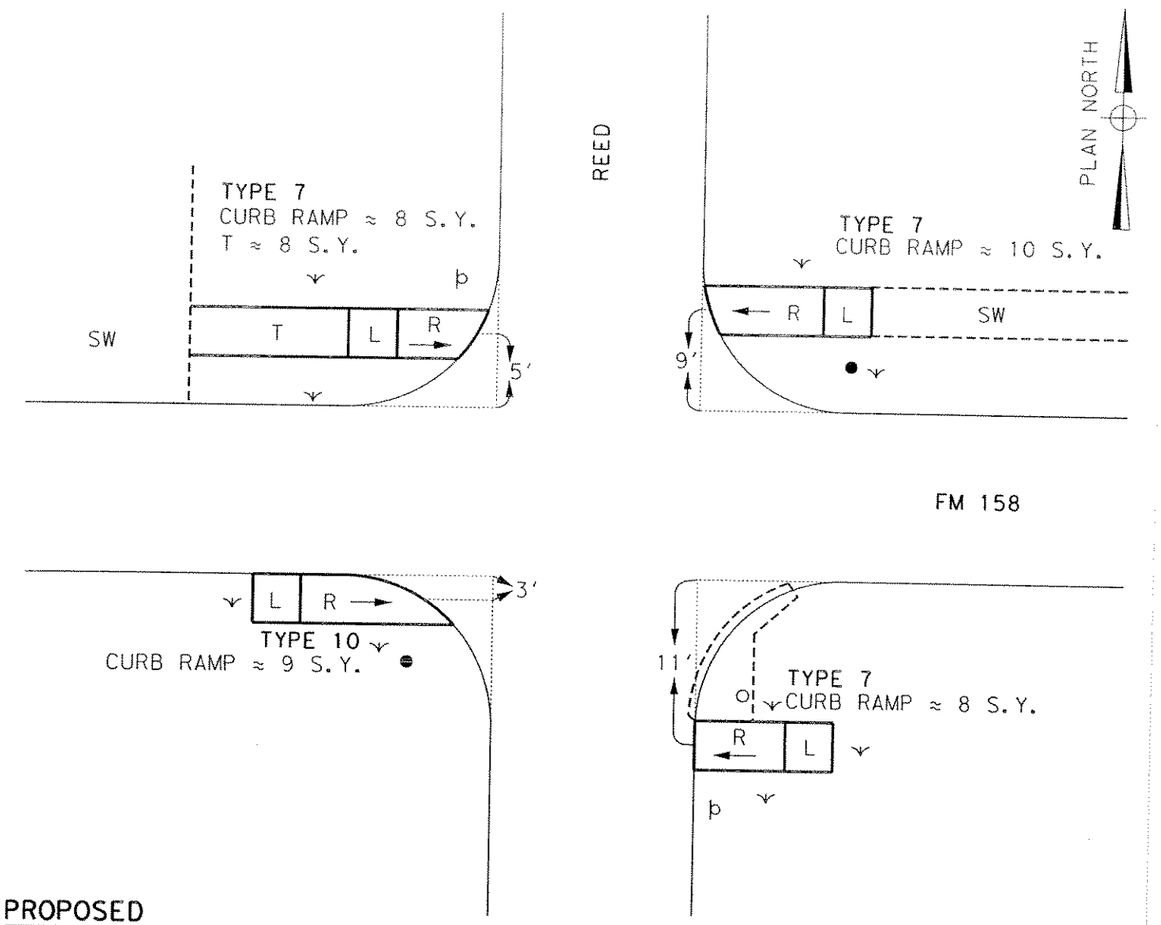

PROPOSED

LEGEND

- PP = POWER POLE
- GA = GUY ANCHOR
- TP = EX. TRAF. SIGNAL POLE
- PB = PED BUTTON
- (P) = NEW PED POLE W/ PED BUTTON
- GB = GROUND BOX
- EL = ELECTRICAL PEDESTAL/BOX
- LP = LIGHT POLE
- FH = FIRE HYDRANT
- WV = WATER VALVE
- MH = MANHOLE
- IN = INLET
- TR = TREE
- SH = SHRUB; = GRASS
- SN = SIGN; ····· = NEW CONDUIT
- CL = CONSTRUCTION LIMITS
- ER = EXIST RAMP; SW = SIDEWALK
- L = LANDING; R = RAMP
- F = FLARE; T = TRANSITION
- RC = REPLACE CURB/CURB & GUTTER

ITEM DESCRIPTION	UNIT	QUANT.
RETROFIT DETECTABLE WARNING SURFACE	EA	
REPLACE CONC CURB	LF	
CONC SIDEWALKS (6")	SY	8
REMOVING CONC (CURB & GUTTER)	LF	
ELEC CONDR BARE	LF	
CONDT (PVC)	LF	
TRF SIG CBL	LF	
PED DETECT (2 INCH PUSH BTN)	EA	
REMOVAL OF PEDESTRIAN PUSH BUTTONS	EA	
PED POLE ASSEMBLY	EA	
RELOC SM RD SN&AM(TY 10 BWG)	EA	
REF PAV MRK TY 1(W)12"(SLD)	LF	
REF PAV MRK TY 1(W)24"(SLD)	LF	
ELIM EXT PAV MRK & MRKS 12"	LF	
ELIM EXT PAV MRK & MRKS 24"	LF	

ITEM DESCRIPTION	UNIT	QUANT.
CURB RAMPS (TY 1) *	EA	
CURB RAMPS (TY 2) *	EA	
CURB RAMPS (TY 3) *	EA	
CURB RAMPS (TY 4) *	EA	
CURB RAMPS (TY 5) *	EA	
CURB RAMPS (TY 6) *	EA	
CURB RAMPS (TY 7) *	EA	3
CURB RAMPS (TY 9) *	EA	
CURB RAMPS (TY 10) *	EA	1
CURB RAMPS (TY 20) *	EA	
CURB RAMPS (TY 21) *	EA	
CURB RAMPS (TY 22) *	EA	
CURB RAMPS	SY	35
ADJ MANHS	EA	
REPLACE GROUND BOX	EA	
RAIL (HANDRAIL)	LF	
DRIVEWAYS (CONC)	SY	
ADJUST METER BOX TO GRADE	EA	

ITEM DESCRIPTION	UNIT	QUANT.
COMPOST MANUF TOPSOIL	SY	15
EXCAVATION (SPECIAL)	CY	
BLOCK SODDING	SY	15

* = FOR CONTRACTOR'S INFORMATION "ONLY" NON-PAY ITEM

STATE OF TEXAS
SCOTT E DUKETTE
83615
LICENSED
PROFESSIONAL ENGINEER
11/19/07

N. T. S.

Texas Department of Transportation
©2007

H.R.Gray For Construction Success

klotz associates

ADA CURB RAMP PROGRAM
BRYAN, TEXAS
FM 158 AT
REED

DN: AJS						
CK DN: SAS						
DW: GWG						
CK DW: MSJSD						
TRF:						
CK TRF:						

FED. RD. DIV. NO.	STATE	STATE PROJECT NO.			REGIONAL NO.
6	TEXAS				VARIES
STATE DIST.	COUNTY		CONTROL NO.	SECTION NO.	JOB NO.	SHEET NO.
BRY	WALKER, ETC.		0911	27	035, ETC.	102

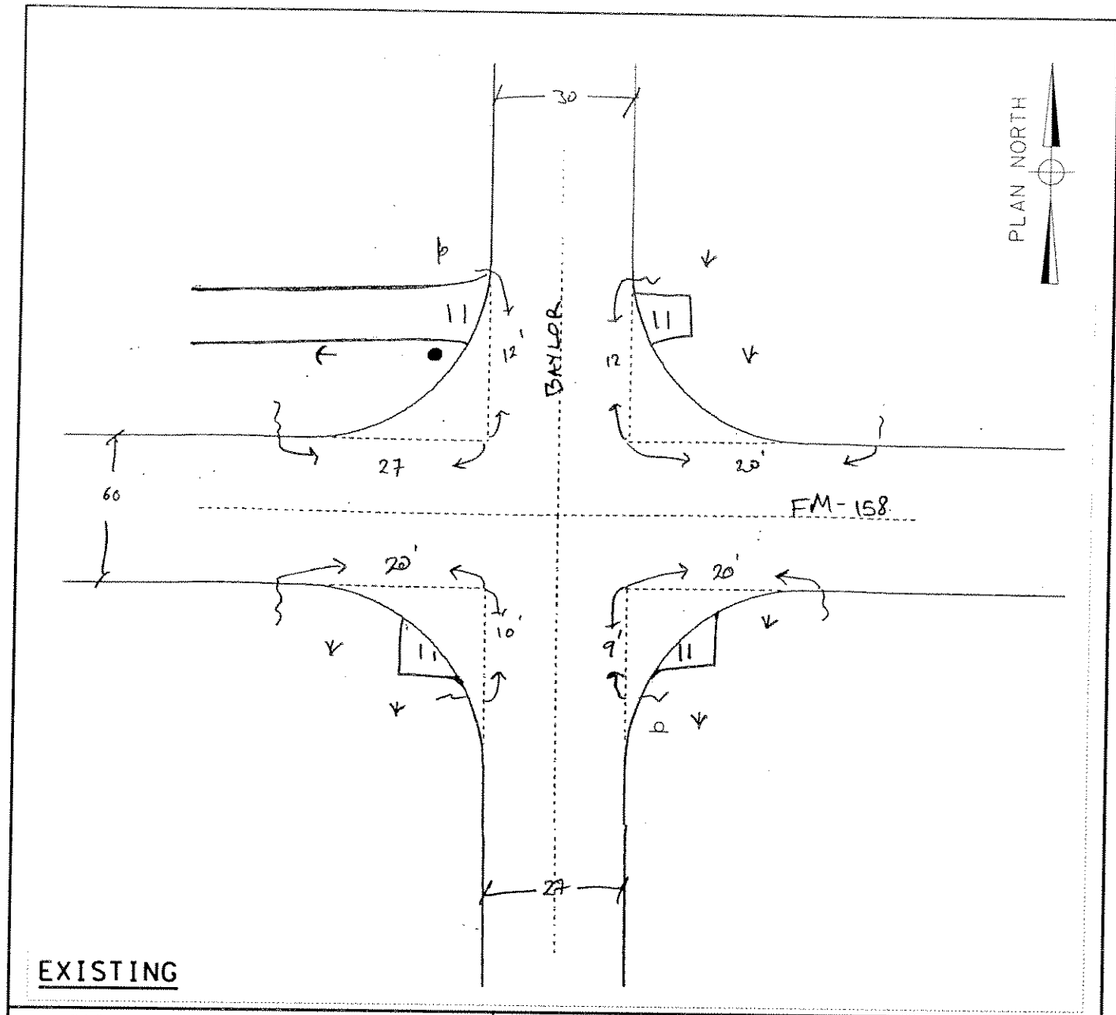

EXISTING

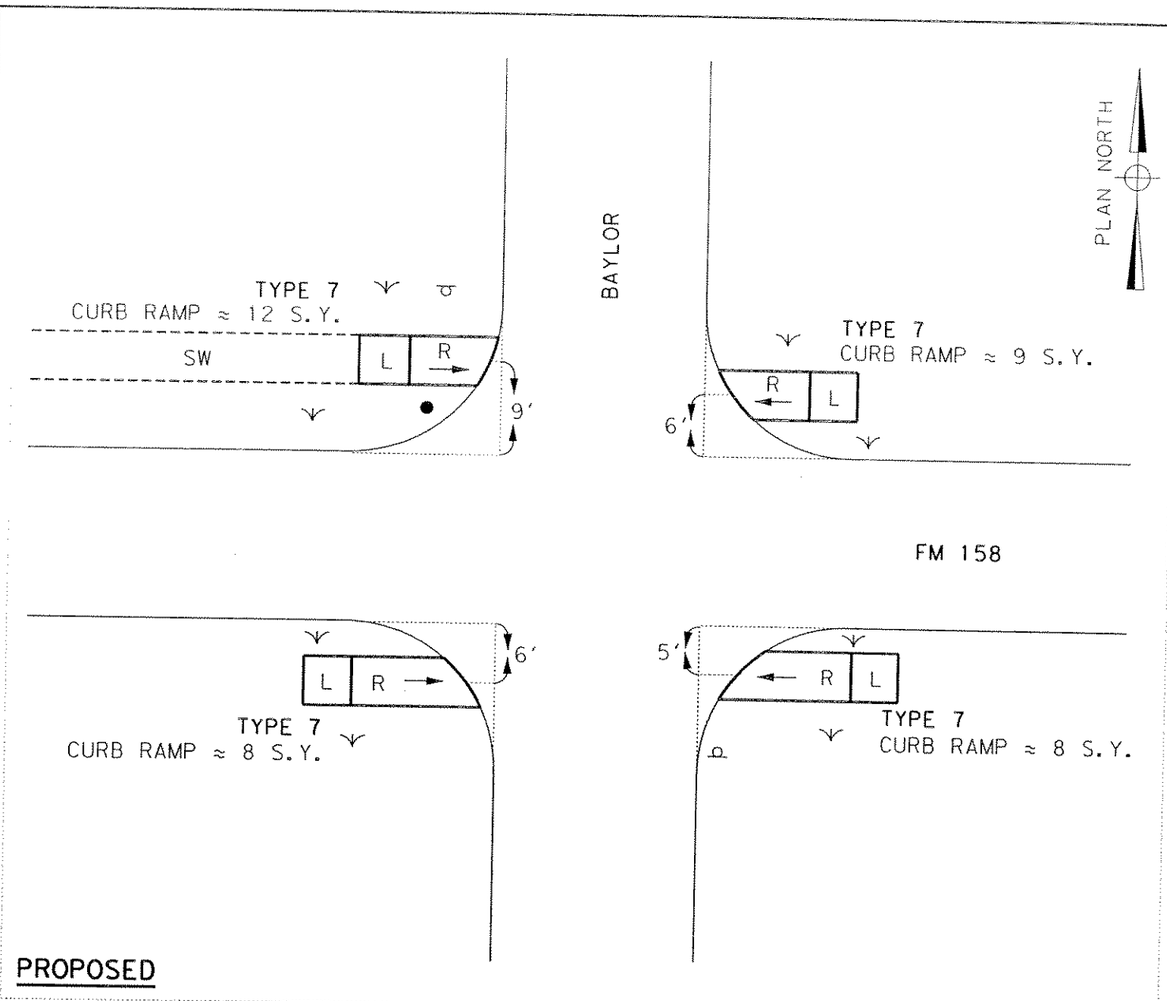

PROPOSED

LEGEND

- ● PP = POWER POLE
- GA = GUY ANCHOR
- TP = EX.TRAF. SIGNAL POLE
- PB = PED BUTTON
- Ⓟ = NEW PED POLE W/ PED BUTTON
- GB = GROUND BOX
- EL = ELECTRICAL PEDESTAL/BOX
- LP = LIGHT POLE
- FH = FIRE HYDRANT
- WV = WATER VALVE
- MH = MANHOLE
- IN = INLET
- TR = TREE
- SH = SHRUB; = GRASS
- SN = SIGN; = NEW CONDUIT
- CL = CONSTRUCTION LIMITS
- ER = EXIST RAMP; SW = SIDEWALK
- L = LANDING; R = RAMP
- F = FLARE; T = TRANSITION
- RC = REPLACE CURB/CURB & GUTTER

ITEM DESCRIPTION	UNIT	QUANT.
RETROFIT DETECTABLE WARNING SURFACE	EA	
REPLACE CONC CURB	LF	
CONC SIDEWALKS (6")	SY	
REMOVING CONC (CURB & GUTTER)	LF	
ELEC CONDR BARE	LF	
CONDT (PVC)	LF	
TRF SIG CBL	LF	
PED DETECT (2 INCH PUSH BTN)	EA	
REMOVAL OF PEDESTRIAN PUSH BUTTONS	EA	
PED POLE ASSEMBLY	EA	
RELOC SM RD SN&AM(TY 10 BWG)	EA	
REF PAV MRK TY 1(W)12"(SLD)	LF	
REF PAV MRK TY 1(W)24"(SLD)	LF	
ELIM EXT PAV MRK & MRKS 12"	LF	
ELIM EXT PAV MRK & MRKS 24"	LF	

ITEM DESCRIPTION	UNIT	QUANT.
CURB RAMPS (TY 1) *	EA	
CURB RAMPS (TY 2) *	EA	
CURB RAMPS (TY 3) *	EA	
CURB RAMPS (TY 4) *	EA	
CURB RAMPS (TY 5) *	EA	
CURB RAMPS (TY 6) *	EA	
CURB RAMPS (TY 7) *	EA	4
CURB RAMPS (TY 9) *	EA	
CURB RAMPS (TY 10) *	EA	
CURB RAMPS (TY 20) *	EA	
CURB RAMPS (TY 21) *	EA	
CURB RAMPS (TY 22) *	EA	
CURB RAMPS	SY	37
ADJ MANHS	EA	
REPLACE GROUND BOX	EA	
RAIL (HANDRAIL)	LF	
DRIVEWAYS (CONC)	SY	
ADJUST METER BOX TO GRADE	EA	

ITEM DESCRIPTION	UNIT	QUANT.
COMPOST MANUF TOPSOIL	SY	17
EXCAVATION (SPECIAL)	CY	
BLOCK SODDING	SY	17

* = FOR CONTRACTOR'S INFORMATION "ONLY" NON-PAY ITEM

STATE OF TEXAS
SCOTT E DUKETTE
83615
LICENSED
PROFESSIONAL ENGINEER
11/19/07

N. T. S.

Texas Department of Transportation
©2007

H.R.Gray For Construction Success

klotz associates

ADA CURB RAMP PROGRAM
BRYAN, TEXAS
FM 158 AT
BAYLOR

DN: AJS	FED. RD. DIV. NO.	STATE	STATE PROJECT NO.		HIGHWAY NO.
CK DN: SAS	6	TEXAS			VARIES
DW: GWG	STATE DIST.	COUNTY	CONTROL NO.	SECTION NO.	JOB NO. / SHEET NO.
CK DW: MS/SD	BRY	WALKER, ETC.	0917	27	035, ETC. / 103
TR:					
CK TR:					

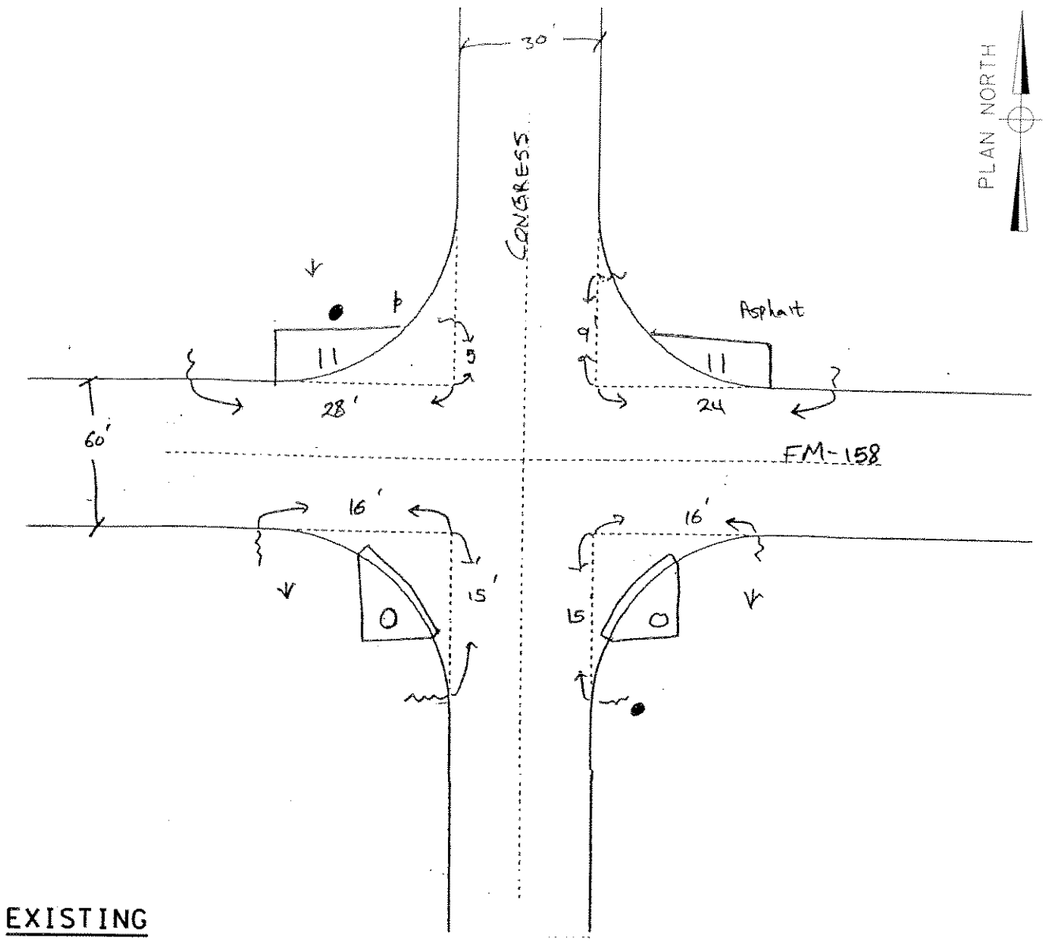

EXISTING

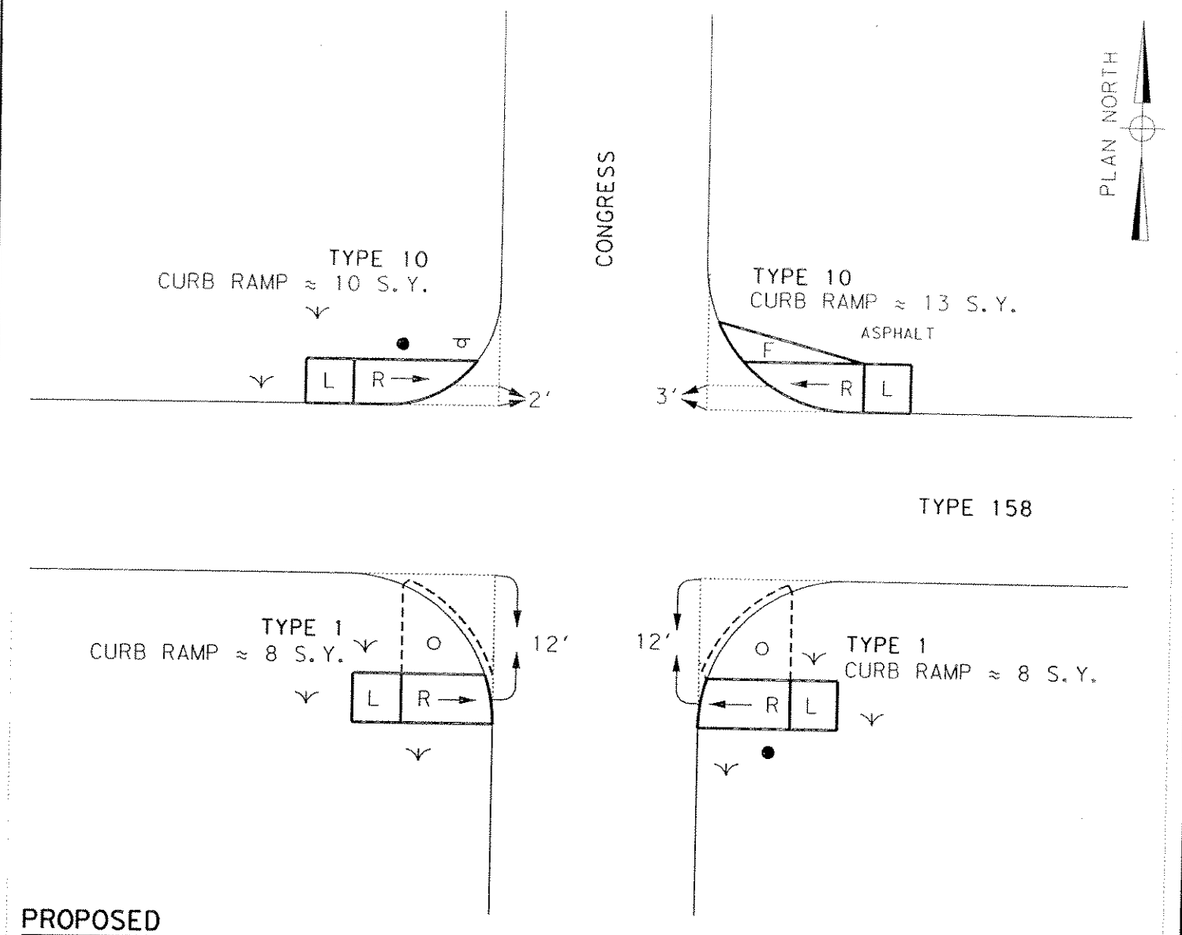

PROPOSED

LEGEND

- ● PP = POWER POLE
- GA = GUY ANCHOR
- TP = EX. TRAF. SIGNAL POLE
- PB = PED BUTTON
- Ⓟ = NEW PED POLE W/ PED BUTTON
- GB = GROUND BOX
- EL = ELECTRICAL PEDESTAL/BOX
- LP = LIGHT POLE
- FH = FIRE HYDRANT
- WV = WATER VALVE
- MH = MANHOLE
- IN = INLET
- TR = TREE
- SH = SHRUB; = GRASS
- SN = SIGN; ····· = NEW CONDUIT
- CL = CONSTRUCTION LIMITS
- ER = EXIST RAMP; SW = SIDEWALK
- L = LANDING; R = RAMP
- F = FLARE; T = TRANSITION
- RC = REPLACE CURB/CURB & GUTTER

ITEM DESCRIPTION	UNIT	QUANT.
RETROFIT DETECTABLE WARNING SURFACE	EA	
REPLACE CONC CURB	LF	
CONC SIDEWALKS (6")	SY	
REMOVING CONC (CURB & GUTTER)	LF	
ELEC CONDR BARE	LF	
CONDT (PVC)	LF	
TRF SIG CBL	LF	
PED DETECT (2 INCH PUSH BTN)	EA	
REMOVAL OF PEDESTRIAN PUSH BUTTONS	EA	
PED POLE ASSEMBLY	EA	
RELOC SM RD SN&AM(TY 10 BWG)	EA	
REF PAV MRK TY 1(W)12"(SLD)	LF	
REF PAV MRK TY 1(W)24"(SLD)	LF	
ELIM EXT PAV MRK & MRKS 12"	LF	
ELIM EXT PAV MRK & MRKS 24"	LF	

ITEM DESCRIPTION	UNIT	QUANT.
CURB RAMPS (TY 1) *	EA	2
CURB RAMPS (TY 2) *	EA	
CURB RAMPS (TY 3) *	EA	
CURB RAMPS (TY 4) *	EA	
CURB RAMPS (TY 5) *	EA	
CURB RAMPS (TY 6) *	EA	
CURB RAMPS (TY 7) *	EA	
CURB RAMPS (TY 9) *	EA	
CURB RAMPS (TY 10) *	EA	2
CURB RAMPS (TY 20) *	EA	
CURB RAMPS (TY 21) *	EA	
CURB RAMPS (TY 22) *	EA	
CURB RAMPS	SY	39
ADJ MANHS	EA	
REPLACE GROUND BOX	EA	
RAIL (HANDRAIL)	LF	
DRIVEWAYS (CONC)	SY	
ADJUST METER BOX TO GRADE	EA	

ITEM DESCRIPTION	UNIT	QUANT.
COMPOST MANUF TOPSOIL	SY	8
EXCAVATION (SPECIAL)	CY	
BLOCK SODDING	SY	8

* = FOR CONTRACTOR'S INFORMATION "ONLY" NON-PAY ITEM

STATE OF TEXAS
SCOTT E DUKETTE
83615
LICENSED
PROFESSIONAL ENGINEER
11/19/07

N. T. S.

Texas Department of Transportation
©2007

H.R.Gray For Construction Success

klotz associates

ADA CURB RAMP PROGRAM

BRYAN, TEXAS
FM 158 AT
CONGRESS

DN: AJS	FED. RD. DIV. NO.	STATE	STATE PROJECT NO.			HIGHWAY NO.
CK DN: SAS	6	TEXAS				VARIES
DR: GWG	STATE DIST.	COUNTY		CONTROL NO.	SECTION NO.	JOB NO.	SHEET NO.
CK DR: MS/SD	BRY	WALKER, ETC.		0917	27	035, ETC.	104
TR:							
CK TR:							

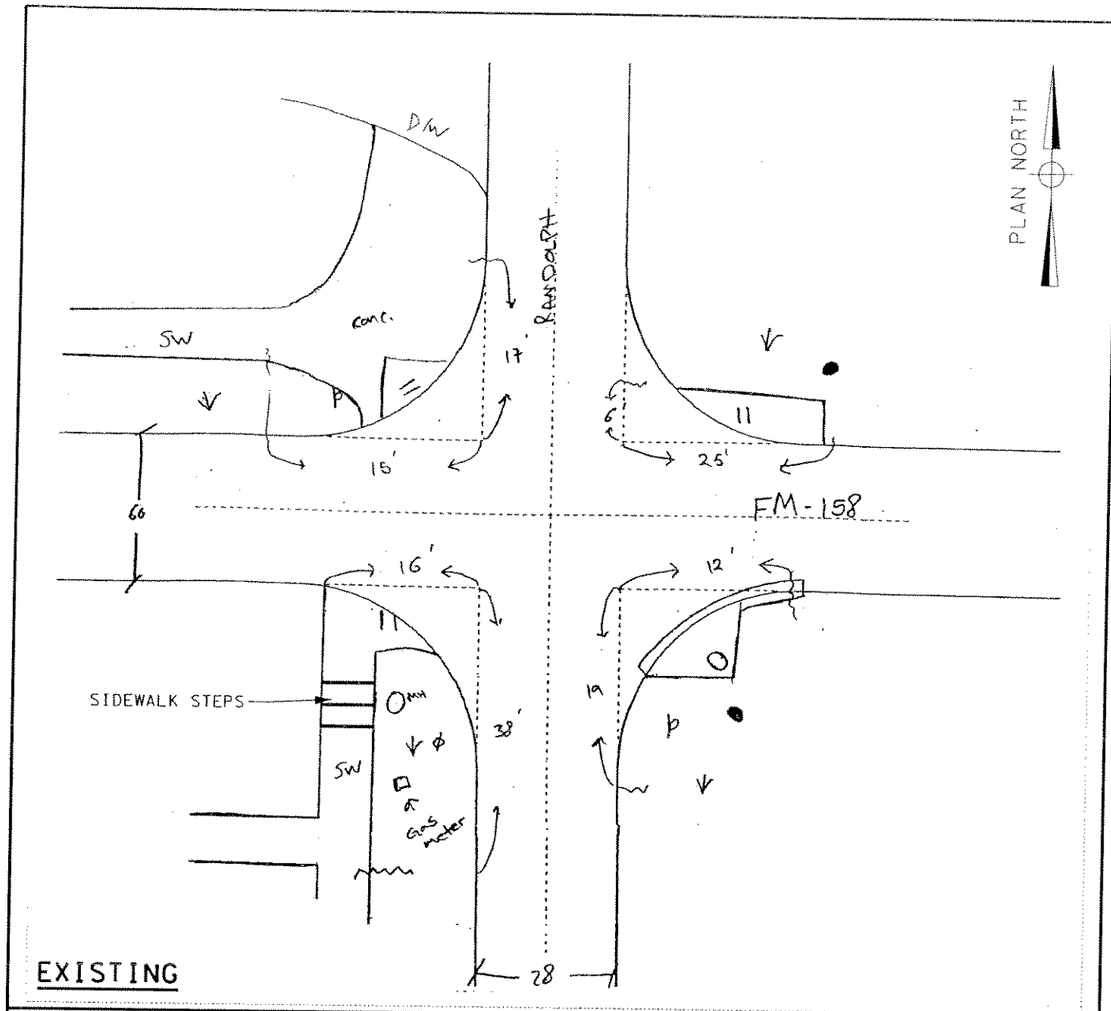

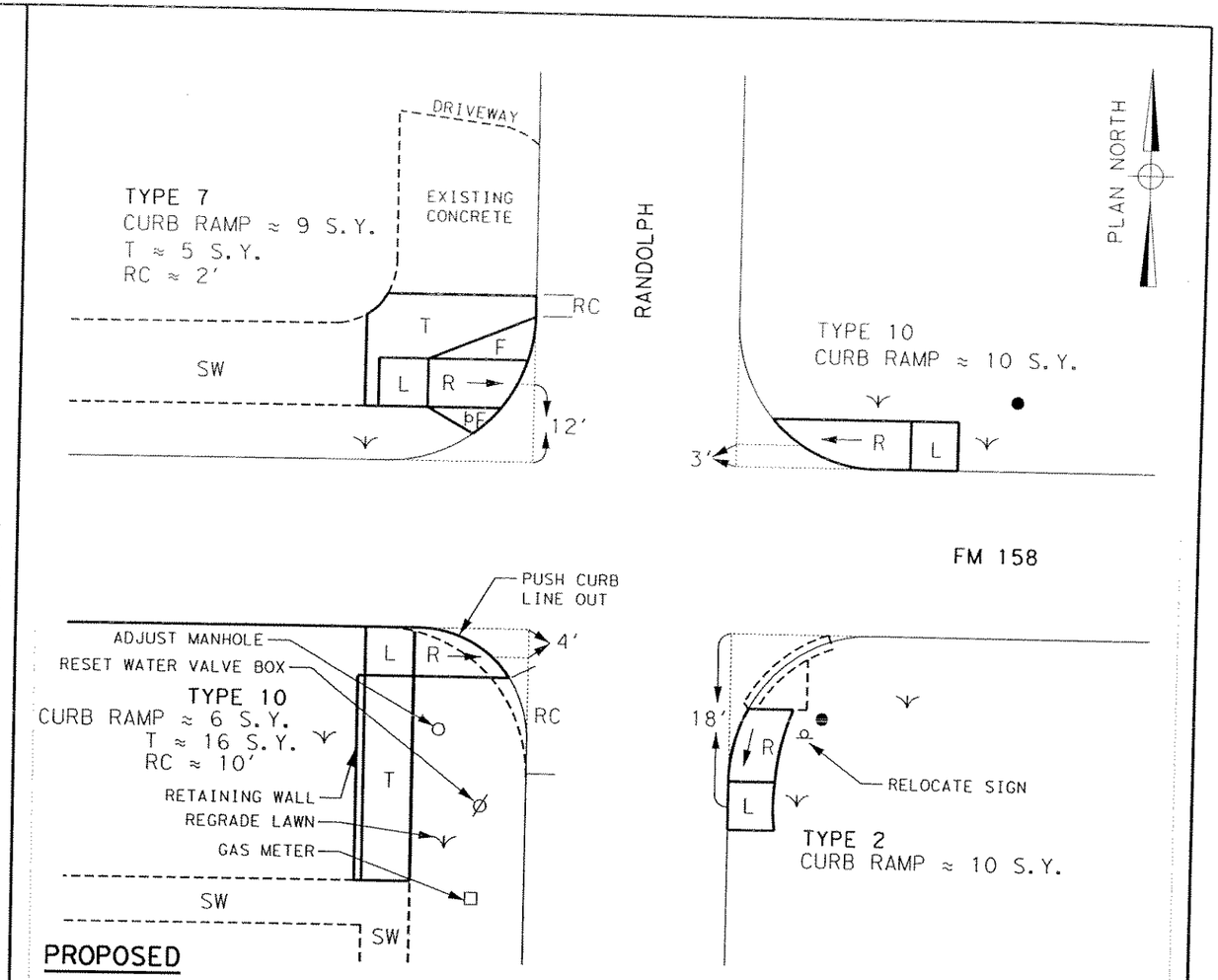

LEGEND

- ● PP = POWER POLE
- GA = GUY ANCHOR
- TP = EX. TRAF. SIGNAL POLE
- PB = PED BUTTON
- Ⓟ = NEW PED POLE W/ PED BUTTON
- GB = GROUND BOX
- EL = ELECTRICAL PEDESTAL/BOX
- LP = LIGHT POLE
- FH = FIRE HYDRANT
- WV = WATER VALVE
- MH = MANHOLE
- IN = INLET
- TR = TREE
- SH = SHRUB; = GRASS
- SN = SIGN; = NEW CONDUIT
- CL = CONSTRUCTION LIMITS
- ER = EXIST RAMP; SW = SIDEWALK
- L = LANDING; R = RAMP
- F = FLARE; T = TRANSITION
- RC = REPLACE CURB/CURB & GUTTER

ITEM DESCRIPTION	UNIT	QUANT.
RETROFIT DETECTABLE WARNING SURFACE	EA	
REPLACE CONC CURB	LF	12
CONC SIDEWALKS (6")	SY	21
REMOVING CONC (CURB & GUTTER)	LF	12
ELEC CONDR BARE	LF	
CONDT (PVC)	LF	
TRF SIG CBL	LF	
PED DETECT (2 INCH PUSH BTN)	EA	
REMOVAL OF PEDESTRIAN PUSH BUTTONS	EA	
PED POLE ASSEMBLY	EA	
RELOC SM RD SN&AM(TY 10 BWG)	EA	1
REF PAV MRK TY 1(W)12"(SLD)	LF	
REF PAV MRK TY 1(W)24"(SLD)	LF	
ELIM EXT PAV MRK & MRKS 12"	LF	
ELIM EXT PAV MRK & MRKS 24"	LF	

ITEM DESCRIPTION	UNIT	QUANT.
CURB RAMPS (TY 1) *	EA	
CURB RAMPS (TY 2) *	EA	1
CURB RAMPS (TY 3) *	EA	
CURB RAMPS (TY 4) *	EA	
CURB RAMPS (TY 5) *	EA	
CURB RAMPS (TY 6) *	EA	
CURB RAMPS (TY 7) *	EA	1
CURB RAMPS (TY 9) *	EA	
CURB RAMPS (TY 10) *	EA	2
CURB RAMPS (TY 20) *	EA	
CURB RAMPS (TY 21) *	EA	
CURB RAMPS (TY 22) *	EA	
CURB RAMPS	SY	35
ADJ MANHS	EA	1
REPLACE GROUND BOX	EA	
RAIL (HANDRAIL)	LF	
DRIVEWAYS (CONC)	SY	
ADJUST METER BOX TO GRADE	EA	
RET. WALL (CONC BLOCK)	SF	120

ITEM DESCRIPTION	UNIT	QUANT.
COMPOST MANUF TOPSOIL	SY	13
EXCAVATION (SPECIAL)	CY	
BLOCK SODDING	SY	13

* = FOR CONTRACTOR'S INFORMATION "ONLY" NON-PAY ITEM

STATE OF TEXAS
SCOTT E DUKETTE
83615
LICENSED PROFESSIONAL ENGINEER
12/6/07

N. T. S.

Texas Department of Transportation
©2007

H.R.Gray For Construction Success

klotz associates

ADA CURB RAMP PROGRAM
BRYAN, TEXAS
FM 158 AT
RANDOLPH

DN: AJS	FED. RD. DIV. NO.	STATE	STATE PROJECT NO.		HIGHWAY NO.
CK DN: SAS	6	TEXAS			VARIES
DW: DRD	STATE DIST.	COUNTY	CONTROL NO.	SECTION NO.	JOB NO.	SHEET NO.
CK DW: MS/SD	BRY	WALKER, ETC.	0917	27	035, ETC.	105
JR:						
CK TR:						

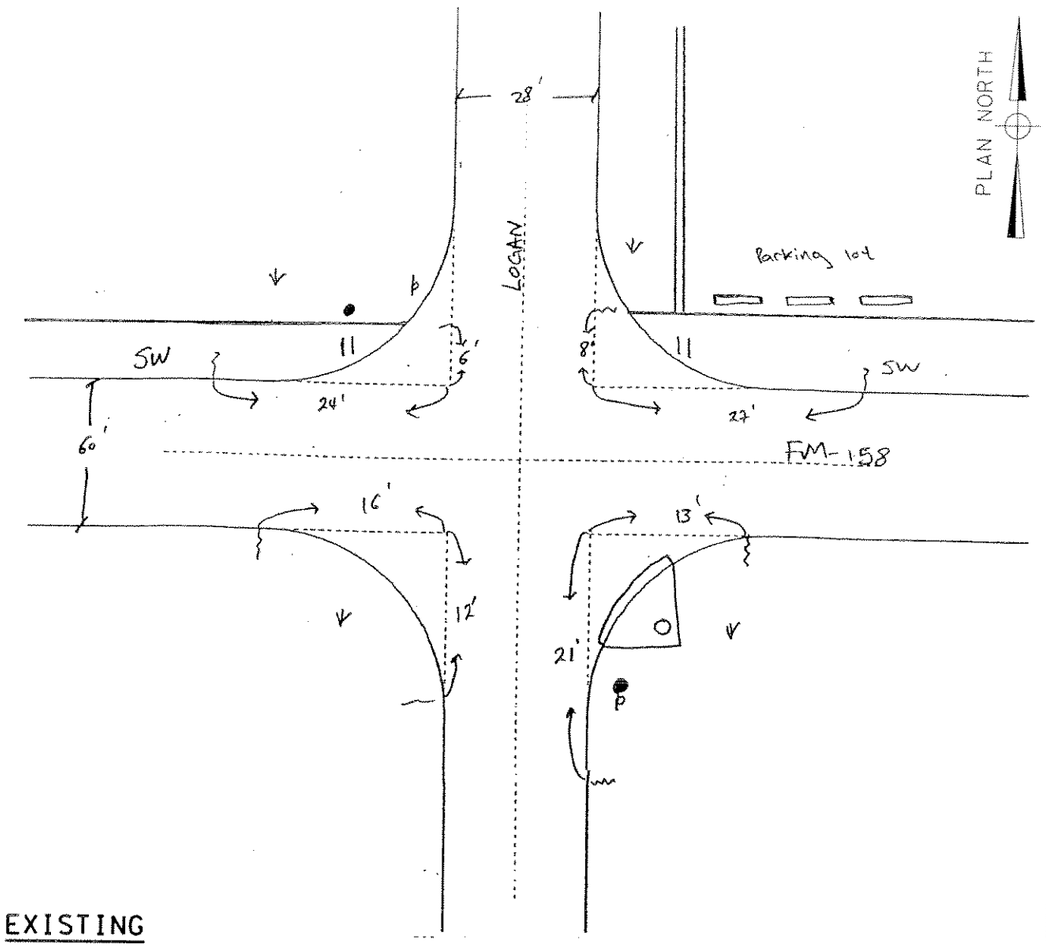

EXISTING

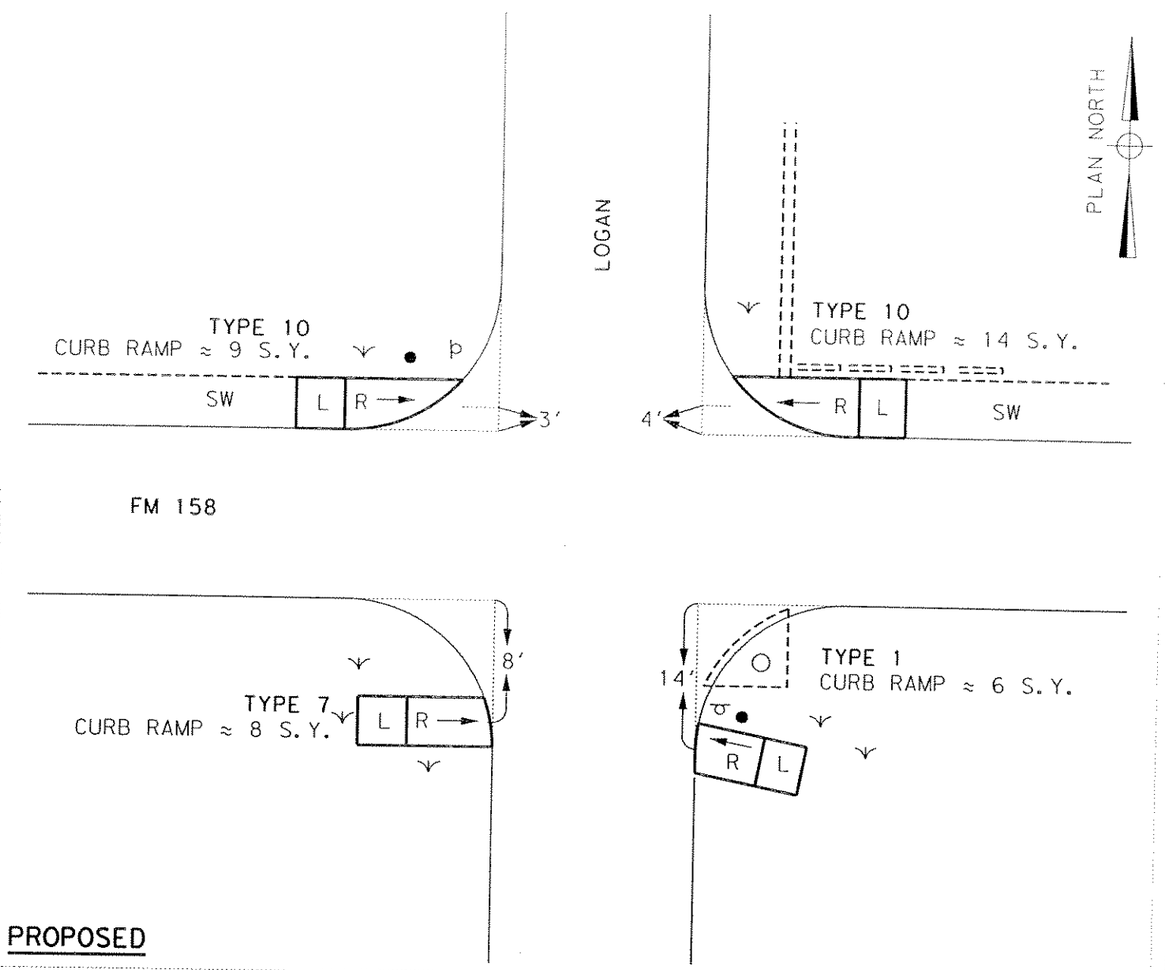

PROPOSED

LEGEND

- PP = POWER POLE
- GA = GUY ANCHOR
- TP = EX. TRAF. SIGNAL POLE
- PB = PED BUTTON
- (P) = NEW PED POLE W/ PED BUTTON
- GB = GROUND BOX
- EL = ELECTRICAL PEDESTAL/BOX
- LP = LIGHT POLE
- FH = FIRE HYDRANT
- WV = WATER VALVE
- MH = MANHOLE
- IN = INLET
- TR = TREE
- SH = SHRUB; = GRASS
- SN = SIGN; ····· = NEW CONDUIT
- CL = CONSTRUCTION LIMITS
- ER = EXIST RAMP; SW = SIDEWALK
- L = LANDING; R = RAMP
- F = FLARE; T = TRANSITION
- RC = REPLACE CURB/CURB & GUTTER

ITEM DESCRIPTION	UNIT	QUANT.
RETROFIT DETECTABLE WARNING SURFACE	EA	
REPLACE CONC CURB	LF	
CONC SIDEWALKS (6")	SY	
REMOVING CONC (CURB & GUTTER)	LF	
ELEC CONDR BARE	LF	
CONDT (PVC)	LF	
TRF SIG CBL	LF	
PED DETECT (2 INCH PUSH BTN)	EA	
REMOVAL OF PEDESTRIAN PUSH BUTTONS	EA	
PED POLE ASSEMBLY	EA	
RELOC SM RD SN&AM(TY 10 BWG)	EA	
REF PAV MRK TY 1(W)12"(SLD)	LF	
REF PAV MRK TY 1(W)24"(SLD)	LF	
ELIM EXT PAV MRK & MRKS 12"	LF	
ELIM EXT PAV MRK & MRKS 24"	LF	

ITEM DESCRIPTION	UNIT	QUANT.
CURB RAMPS (TY 1) *	EA	1
CURB RAMPS (TY 2) *	EA	
CURB RAMPS (TY 3) *	EA	
CURB RAMPS (TY 4) *	EA	
CURB RAMPS (TY 5) *	EA	
CURB RAMPS (TY 6) *	EA	
CURB RAMPS (TY 7) *	EA	1
CURB RAMPS (TY 9) *	EA	
CURB RAMPS (TY 10) *	EA	2
CURB RAMPS (TY 20) *	EA	
CURB RAMPS (TY 21) *	EA	
CURB RAMPS (TY 22) *	EA	
CURB RAMPS	SY	37
ADJ MANHS	EA	
REPLACE GROUND BOX	EA	
RAIL (HANDRAIL)	LF	
DRIVEWAYS (CONC)	SY	
ADJUST METER BOX TO GRADE	EA	

ITEM DESCRIPTION	UNIT	QUANT.
COMPOST MANUF TOPSOIL	SY	8
EXCAVATION (SPECIAL)	CY	
BLOCK SODDING	SY	8

* = FOR CONTRACTOR'S INFORMATION "ONLY" NON-PAY ITEM

STATE OF TEXAS
SCOTT E DUKETTE
83615
LICENSED
PROFESSIONAL ENGINEER
11/19/07

N. T. S.

Texas Department of Transportation
©2007

H.R.Gray For Construction Success

klotz associates

ADA CURB RAMP PROGRAM
BRYAN, TEXAS
FM 158 AT
LOGAN

DN: AJS	FED. RD. DIV. NO.	STATE	STATE PROJECT NO.			HIGHWAY NO.
CK DN: SAS	6	TEXAS				VARIES
DW: DWC	STATE DIST.	COUNTY	CONTROL NO.	SECTION NO.	JOB NO.	SHEET NO.
CK DW: MS/SD	BRY	WALKER, ETC.	0917	27	035, ETC.	106
TR:						
CK TR:						

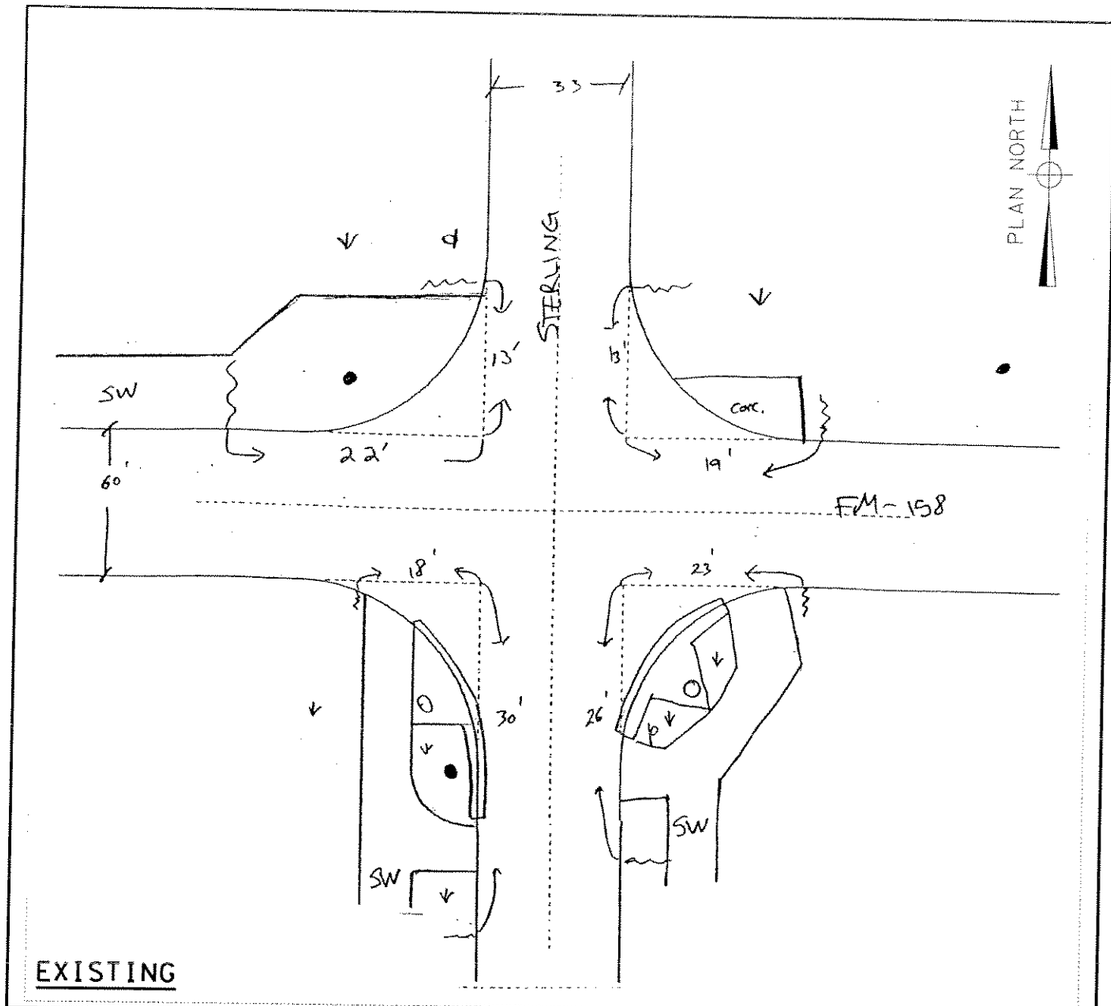

EXISTING

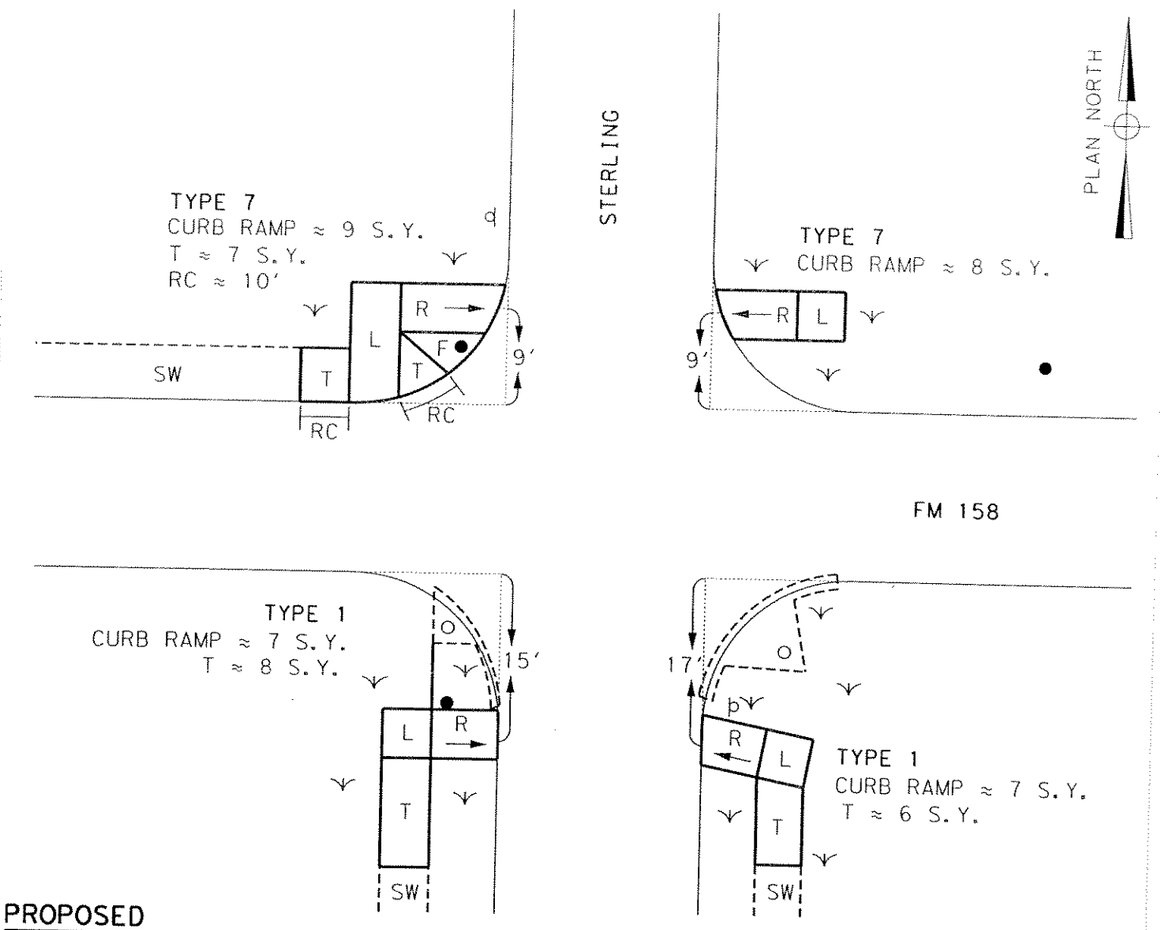

PROPOSED

LEGEND

- ● PP = POWER POLE
- GA = GUY ANCHOR
- TP = EX. TRAF. SIGNAL POLE
- PB = PED BUTTON
- Ⓟ = NEW PED POLE W/ PED BUTTON
- GB = GROUND BOX
- EL = ELECTRICAL PEDESTAL/BOX
- LP = LIGHT POLE
- FH = FIRE HYDRANT
- WV = WATER VALVE
- MH = MANHOLE
- IN = INLET
- TR = TREE
- SH = SHRUB; = GRASS
- SN = SIGN; ····· = NEW CONDUIT
- CL = CONSTRUCTION LIMITS
- ER = EXIST RAMP; SW = SIDEWALK
- L = LANDING; R = RAMP
- F = FLARE; T = TRANSITION
- RC = REPLACE CURB/CURB & GUTTER

ITEM DESCRIPTION	UNIT	QUANT.
RETROFIT DETECTABLE WARNING SURFACE	EA	
REPLACE CONC CURB	LF	10
CONC SIDEWALKS (6")	SY	21
REMOVING CONC (CURB & GUTTER)	LF	10
ELEC CONDR BARE	LF	
CONDT (PVC)	LF	
TRF SIG CBL	LF	
PED DETECT (2 INCH PUSH BTN)	EA	
REMOVAL OF PEDESTRIAN PUSH BUTTONS	EA	
PED POLE ASSEMBLY	EA	
RELOC SM RD SN&AM(TY 10 BWG)	EA	
REF PAV MRK TY 1(W)12"(SLD)	LF	
REF PAV MRK TY 1(W)24"(SLD)	LF	
ELIM EXT PAV MRK & MRKS 12"	LF	
ELIM EXT PAV MRK & MRKS 24"	LF	

ITEM DESCRIPTION	UNIT	QUANT.
CURB RAMPS (TY 1) *	EA	2
CURB RAMPS (TY 2) *	EA	
CURB RAMPS (TY 3) *	EA	
CURB RAMPS (TY 4) *	EA	
CURB RAMPS (TY 5) *	EA	
CURB RAMPS (TY 6) *	EA	
CURB RAMPS (TY 7) *	EA	2
CURB RAMPS (TY 9) *	EA	
CURB RAMPS (TY 10) *	EA	
CURB RAMPS (TY 20) *	EA	
CURB RAMPS (TY 21) *	EA	
CURB RAMPS (TY 22) *	EA	
CURB RAMPS	SY	31
ADJ MANHS	EA	
REPLACE GROUND BOX	EA	
RAIL (HANDRAIL)	LF	
DRIVEWAYS (CONC)	SY	
ADJUST METER BOX TO GRADE	EA	

ITEM DESCRIPTION	UNIT	QUANT.
COMPOST MANUF TOPSOIL	SY	40
EXCAVATION (SPECIAL)	CY	
BLOCK SODDING	SY	40

* = FOR CONTRACTOR'S INFORMATION "ONLY" NON-PAY ITEM

STATE OF TEXAS
SCOTT E DUKETTE
83615
LICENSED
PROFESSIONAL ENGINEER
12/6/07

N. T. S.

Texas Department of Transportation
©2007

H.R.Gray For Construction Success

klotz associates

ADA CURB RAMP PROGRAM
BRYAN, TEXAS
FM 158 AT
STERLING

DN: AJS	FED. RD. DIV. NO.	STATE	STATE PROJECT NO.			HIGHWAY NO.
CK. DN: SAS	6	TEXAS				VARIES
DW: GMC	STATE DIST.	COUNTY	CONTROL NO.	SECTION NO.	JOB NO.	SHEET NO.
CK. DW: MS/SD	BRY	WALKER, ETC.	0917	27	035, ETC.	107
CK. TRF:						

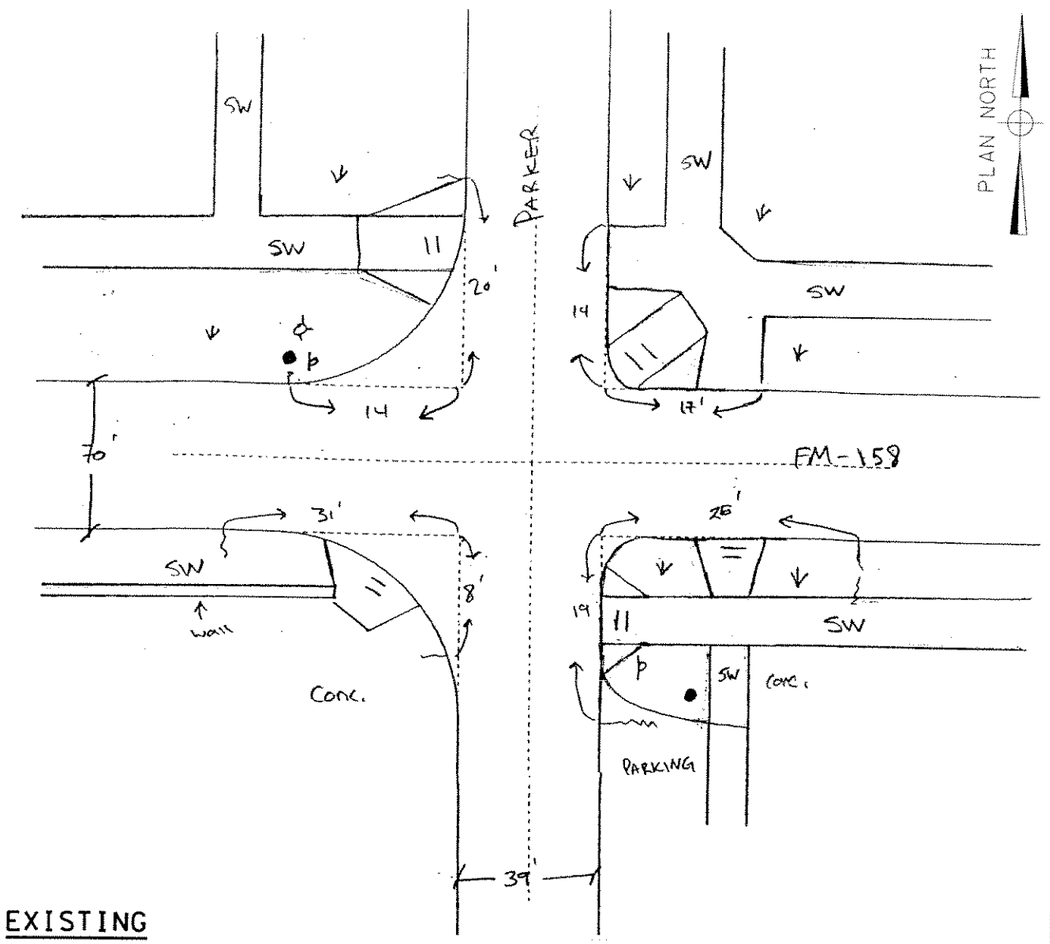

EXISTING

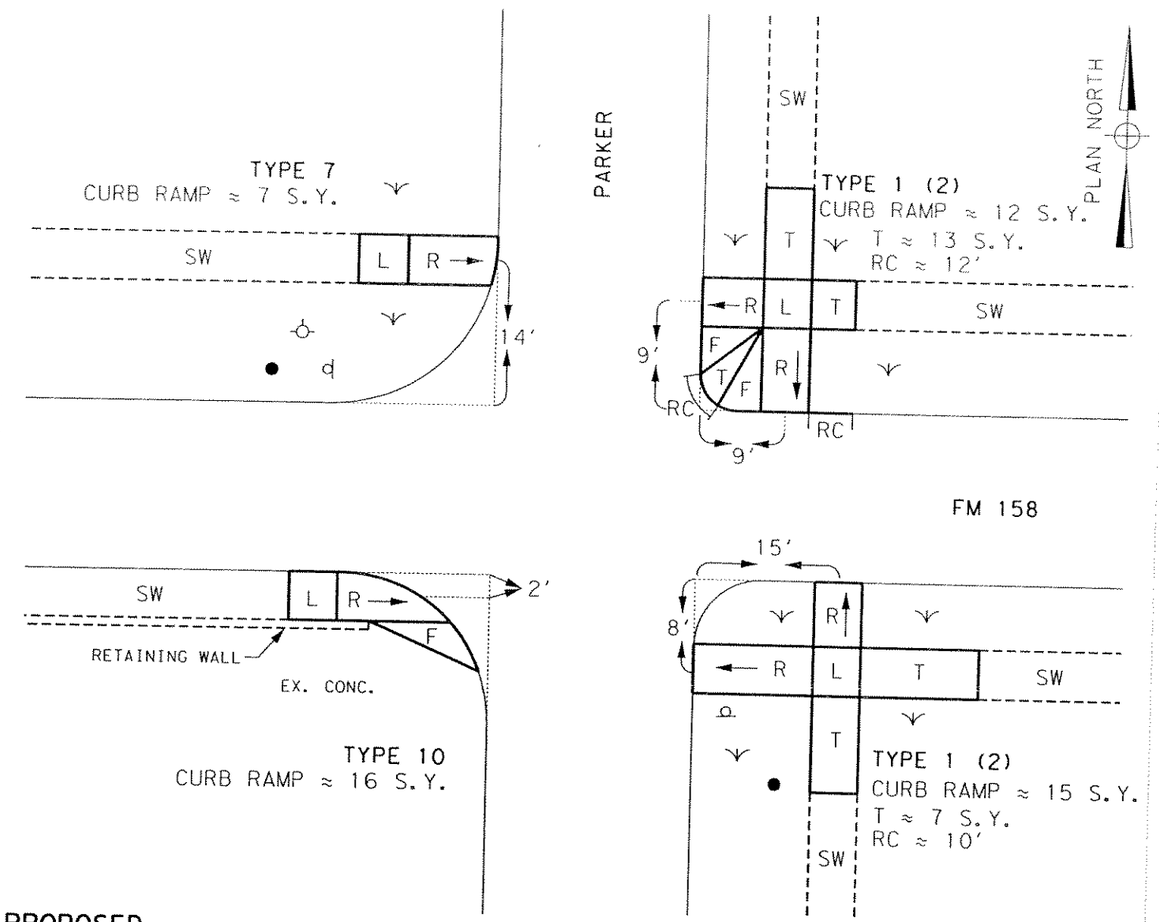

PROPOSED

LEGEND

- PP = POWER POLE
- GA = GUY ANCHOR
- TP = EX. TRAF. SIGNAL POLE
- PB = PED BUTTON
- (P) = NEW PED POLE W/ PED BUTTON
- GB = GROUND BOX
- EL = ELECTRICAL PEDESTAL/BOX
- LP = LIGHT POLE
- FH = FIRE HYDRANT
- WV = WATER VALVE
- MH = MANHOLE
- IN = INLET
- TR = TREE
- SH = SHRUB; = GRASS
- SN = SIGN; = NEW CONDUIT
- CL = CONSTRUCTION LIMITS
- ER = EXIST RAMP; SW = SIDEWALK
- L = LANDING; R = RAMP
- F = FLARE; T = TRANSITION
- RC = REPLACE CURB/CURB & GUTTER

ITEM DESCRIPTION	UNIT	QUANT.
RETROFIT DETECTABLE WARNING SURFACE	EA	
REPLACE CONC CURB	LF	22
CONC SIDEWALKS (6")	SY	20
REMOVING CONC (CURB & GUTTER)	LF	22
ELEC CONDR BARE	LF	
CONDT (PVC)	LF	
TRF SIG CBL	LF	
PED DETECT (2 INCH PUSH BTN)	EA	
REMOVAL OF PEDESTRIAN PUSH BUTTONS	EA	
PED POLE ASSEMBLY	EA	
RELOC SM RD SN&AM(TY 10 BWG)	EA	
REF PAV MRK TY 1(W)12"(SLD)	LF	
REF PAV MRK TY 1(W)24"(SLD)	LF	
ELIM EXT PAV MRK & MRKS 12"	LF	
ELIM EXT PAV MRK & MRKS 24"	LF	

ITEM DESCRIPTION	UNIT	QUANT.
CURB RAMPS (TY 1) *	EA	4
CURB RAMPS (TY 2) *	EA	
CURB RAMPS (TY 3) *	EA	
CURB RAMPS (TY 4) *	EA	
CURB RAMPS (TY 5) *	EA	
CURB RAMPS (TY 6) *	EA	
CURB RAMPS (TY 7) *	EA	1
CURB RAMPS (TY 9) *	EA	
CURB RAMPS (TY 10) *	EA	1
CURB RAMPS (TY 20) *	EA	
CURB RAMPS (TY 21) *	EA	
CURB RAMPS (TY 22) *	EA	
CURB RAMPS	SY	50
ADJ MANHS	EA	
REPLACE GROUND BOX	EA	
RAIL (HANDRAIL)	LF	
DRIVEWAYS (CONC)	SY	
ADJUST METER BOX TO GRADE	EA	

ITEM DESCRIPTION	UNIT	QUANT.
COMPOST MANUF TOPSOIL	SY	16
EXCAVATION (SPECIAL)	CY	
BLOCK SODDING	SY	16

* = FOR CONTRACTOR'S INFORMATION "ONLY" NON-PAY ITEM

STATE OF TEXAS
SCOTT E DUKETTE
83615
LICENSED
PROFESSIONAL ENGINEER
12/6/07

N. T. S.

Texas Department of Transportation
©2007

H.R.Gray For Construction Success

klotz associates

ADA CURB RAMP PROGRAM
BRYAN, TEXAS
FM 158 AT
PARKER

DN: AJS	FED. RD. DIV. NO.	STATE	STATE PROJECT NO.		HIGHWAY NO.	
CK DN: SAS	6	TEXAS			VARIES	
DW: CWG	STATE DIST.	COUNTY		CONTROL NO.	SECTION NO.	JOB NO.	SHEET NO.
CK DW: MSVSD	BRY	WALKER, ETC.		0917	27	035, ETC.	108
TR:							
CK TR:							

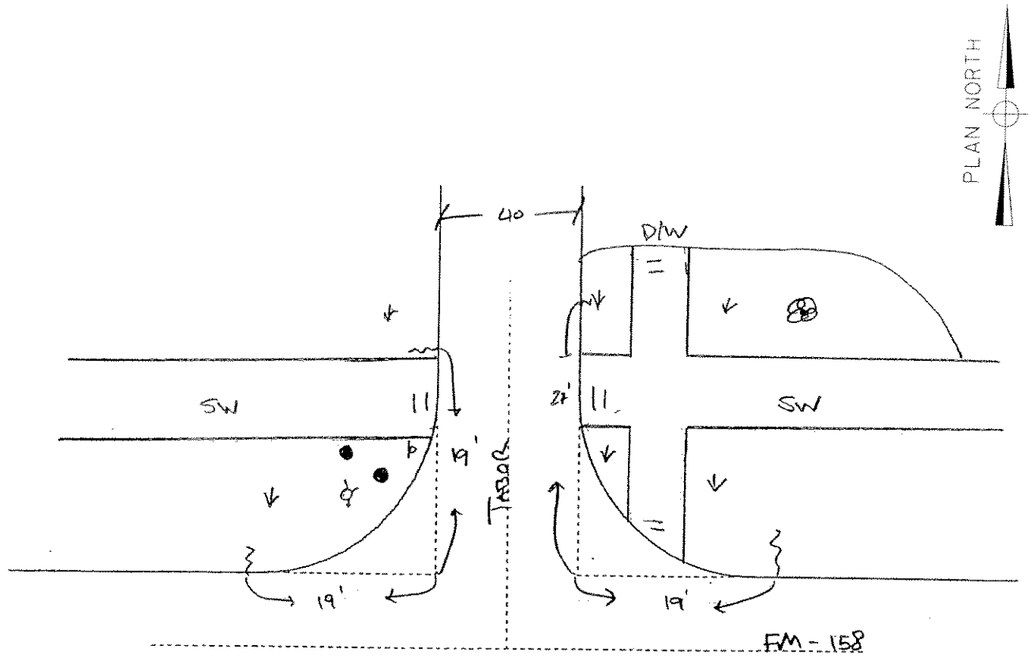

EXISTING

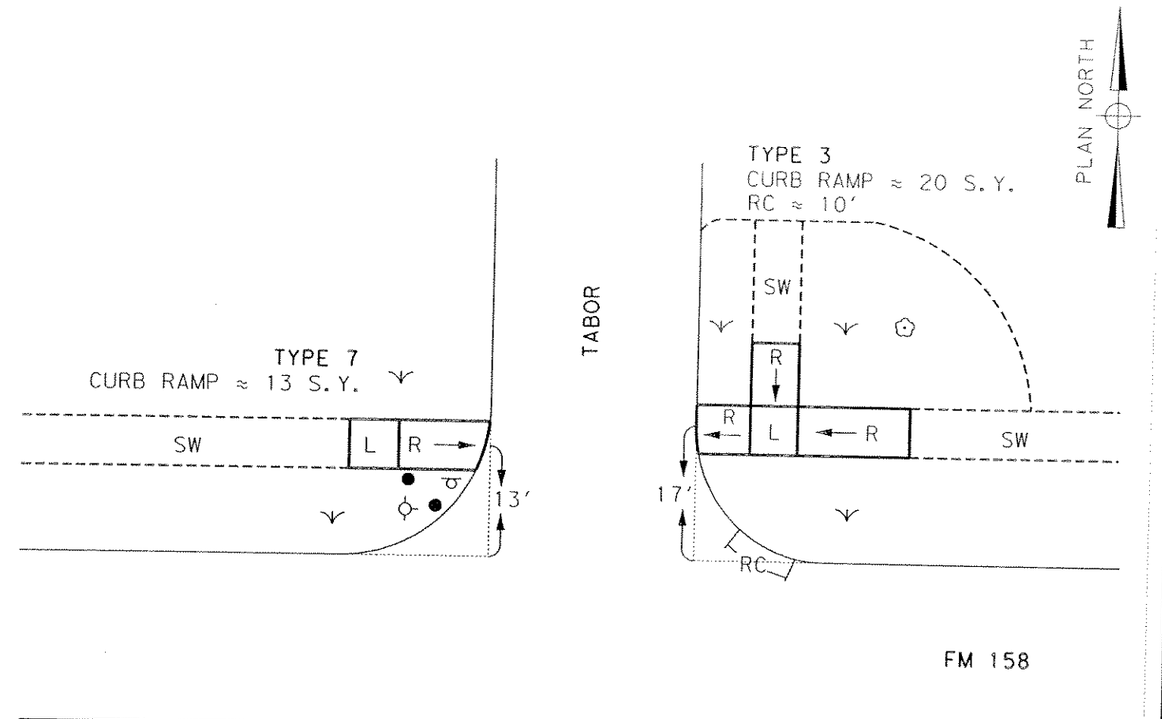

PROPOSED

LEGEND

- ● PP = POWER POLE
- GA = GUY ANCHOR
- TP = EX. TRAF. SIGNAL POLE
- PB = PED BUTTON
- Ⓟ = NEW PED POLE W/ PED BUTTON
- GB = GROUND BOX
- EL = ELECTRICAL PEDESTAL/BOX
- LP = LIGHT POLE
- FH = FIRE HYDRANT
- WV = WATER VALVE
- MH = MANHOLE
- IN = INLET
- TR = TREE
- SH = SHRUB; GRASS
- SN = SIGN; NEW CONDUIT
- CL = CONSTRUCTION LIMITS
- ER = EXIST RAMP; SW = SIDEWALK
- L = LANDING; R = RAMP
- F = FLARE; T = TRANSITION
- RC = REPLACE CURB/CURB & GUTTER

ITEM DESCRIPTION	UNIT	QUANT.
RETROFIT DETECTABLE WARNING SURFACE	EA	
REPLACE CONC CURB	LF	10
CONC SIDEWALKS (6")	SY	
REMOVING CONC (CURB & GUTTER)	LF	10
ELEC CONDR BARE	LF	
CONDT (PVC)	LF	
TRF SIG CBL	LF	
PED DETECT (2 INCH PUSH BTN)	EA	
REMOVAL OF PEDESTRIAN PUSH BUTTONS	EA	
PED POLE ASSEMBLY	EA	
RELOC SM RD SN&AM(TY 10 BWG)	EA	
REF PAV MRK TY 1(W)12"(SLD)	LF	
REF PAV MRK TY 1(W)24"(SLD)	LF	
ELIM EXT PAV MRK & MRKS 12"	LF	
ELIM EXT PAV MRK & MRKS 24"	LF	

ITEM DESCRIPTION	UNIT	QUANT.
CURB RAMPS (TY 1) *	EA	
CURB RAMPS (TY 2) *	EA	
CURB RAMPS (TY 3) *	EA	1
CURB RAMPS (TY 4) *	EA	
CURB RAMPS (TY 5) *	EA	
CURB RAMPS (TY 6) *	EA	
CURB RAMPS (TY 7) *	EA	1
CURB RAMPS (TY 9) *	EA	
CURB RAMPS (TY 10) *	EA	
CURB RAMPS (TY 20) *	EA	
CURB RAMPS (TY 21) *	EA	
CURB RAMPS (TY 22) *	EA	
CURB RAMPS	SY	33
ADJ MANHS	EA	
REPLACE GROUND BOX	EA	
RAIL (HANDRAIL)	LF	
DRIVEWAYS (CONC)	SY	
ADJUST METER BOX TO GRADE	EA	

ITEM DESCRIPTION	UNIT	QUANT.
COMPOST MANUF TOPSOIL	SY	17
EXCAVATION (SPECIAL)	CY	
BLOCK SODDING	SY	17

* = FOR CONTRACTOR'S INFORMATION "ONLY" NON-PAY ITEM

STATE OF TEXAS
SCOTT E. DUKETTE
83615
LICENSED
PROFESSIONAL ENGINEER
11/19/07

N. T. S.

Texas Department of Transportation
©2007

H.R.Gray For Construction Success

klotz associates

ADA CURB RAMP PROGRAM
BRYAN, TEXAS
FM 158 AT
TABOR

DN: FJS	FED. RD. DIV. NO.	STATE	STATE PROJECT NO.			HIGHWAY NO.
CK DN: SAS	6	TEXAS				VARIES
DW: GMG						
CK DW: MS/SD	STATE DIST.	COUNTY		CONTROL NO.	SECTION NO.	JOB NO. / SHEET NO.
TR:						
CK TR:	BRY	WALKER, ETC.		0917	27	035, ETC. / 109

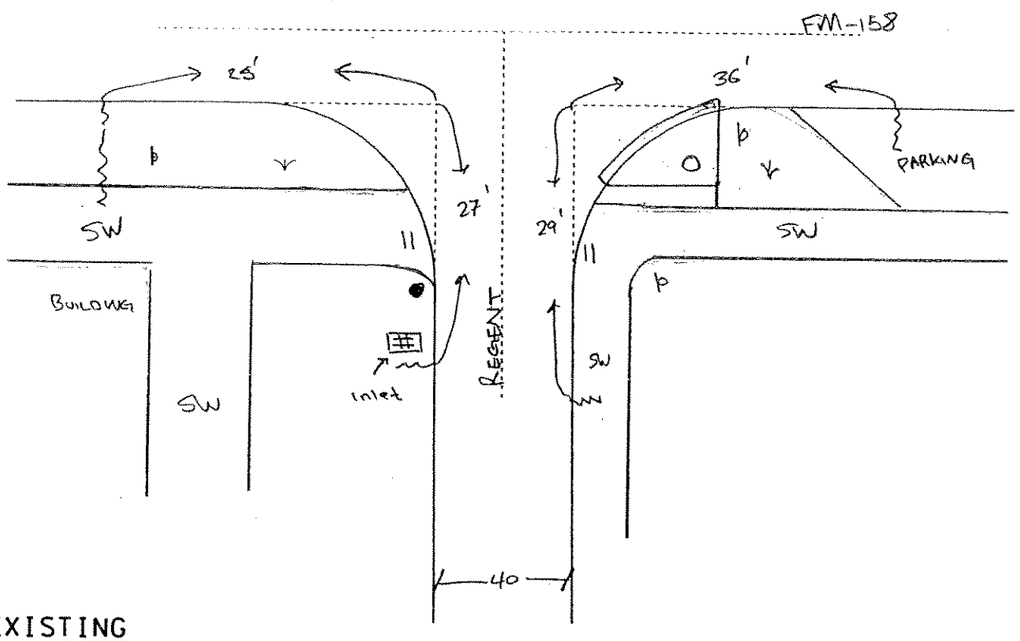

EXISTING

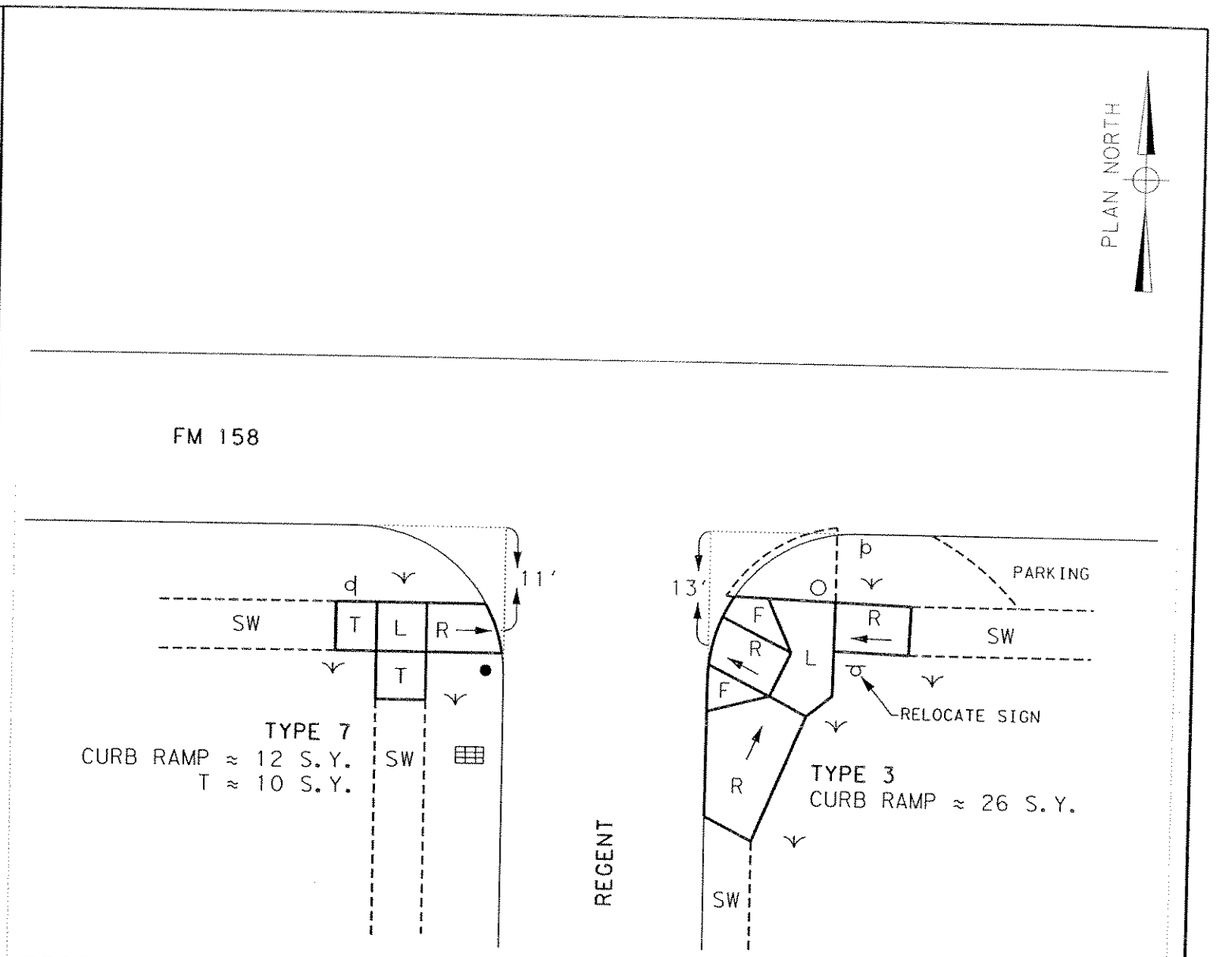

PROPOSED

LEGEND

- ● PP = POWER POLE
- GA = GUY ANCHOR
- TP = EX. TRAF. SIGNAL POLE
- PB = PED BUTTON
- Ⓟ = NEW PED POLE W/ PED BUTTON
- GB = GROUND BOX
- EL = ELECTRICAL PEDESTAL/BOX
- LP = LIGHT POLE
- FH = FIRE HYDRANT
- WV = WATER VALVE
- MH = MANHOLE
- IN = INLET
- TR = TREE
- SH = SHRUB; = GRASS
- SN = SIGN; = NEW CONDUIT
- CL = CONSTRUCTION LIMITS
- ER = EXIST RAMP; SW = SIDEWALK
- L = LANDING; R = RAMP
- F = FLARE; T = TRANSITION
- RC = REPLACE CURB/CURB & GUTTER

ITEM DESCRIPTION	UNIT	QUANT.
RETROFIT DETECTABLE WARNING SURFACE	EA	
REPLACE CONC CURB	LF	
CONC SIDEWALKS (6")	SY	10
REMOVING CONC (CURB & GUTTER)	LF	
ELEC CONDR BARE	LF	
CONDT (PVC)	LF	
TRF SIG CBL	LF	
PED DETECT (2 INCH PUSH BTN)	EA	
REMOVAL OF PEDESTRIAN PUSH BUTTONS	EA	
PED POLE ASSEMBLY	EA	
RELOC SM RD SN&AM(TY 10 BWG)	EA	1
REF PAV MRK TY 1(W)12"(SLD)	LF	
REF PAV MRK TY 1(W)24"(SLD)	LF	
ELIM EXT PAV MRK & MRKS 12"	LF	
ELIM EXT PAV MRK & MRKS 24"	LF	

ITEM DESCRIPTION	UNIT	QUANT.
CURB RAMPS (TY 1) *	EA	
CURB RAMPS (TY 2) *	EA	
CURB RAMPS (TY 3) *	EA	1
CURB RAMPS (TY 4) *	EA	
CURB RAMPS (TY 5) *	EA	
CURB RAMPS (TY 6) *	EA	
CURB RAMPS (TY 7) *	EA	1
CURB RAMPS (TY 9) *	EA	
CURB RAMPS (TY 10) *	EA	
CURB RAMPS (TY 20) *	EA	
CURB RAMPS (TY 21) *	EA	
CURB RAMPS (TY 22) *	EA	
CURB RAMPS	SY	38
ADJ MANHS	EA	
REPLACE GROUND BOX	EA	
RAIL (HANDRAIL)	LF	
DRIVEWAYS (CONC)	SY	
ADJUST METER BOX TO GRADE	EA	

ITEM DESCRIPTION	UNIT	QUANT.
COMPOST MANUF TOPSOIL	SY	17
EXCAVATION (SPECIAL)	CY	
BLOCK SODDING	SY	17

* = FOR CONTRACTOR'S INFORMATION "ONLY" NON-PAY ITEM

STATE OF TEXAS
SCOTT E DUKETTE
83615
LICENSED
PROFESSIONAL ENGINEER
11/29/07

N. T. S.

Texas Department of Transportation
©2007

H.R.Gray For Construction Success

klotz associates

ADA CURB RAMP PROGRAM
BRYAN, TEXAS
FM 158 AT
REGENT

DN: AJS	FED. RD. DIV. NO.	STATE	STATE PROJECT NO.		HIGHWAY NO.
CK. DN: SAS	6	TEXAS			VARIES
DW: CMD	STATE DIST.	COUNTY	CONTROL NO.	SECTION NO.	JOB NO. / SHEET NO.
CK. DW: MS/SD	BRY	WALKER, ETC.	0917	27	035, ETC. / 110

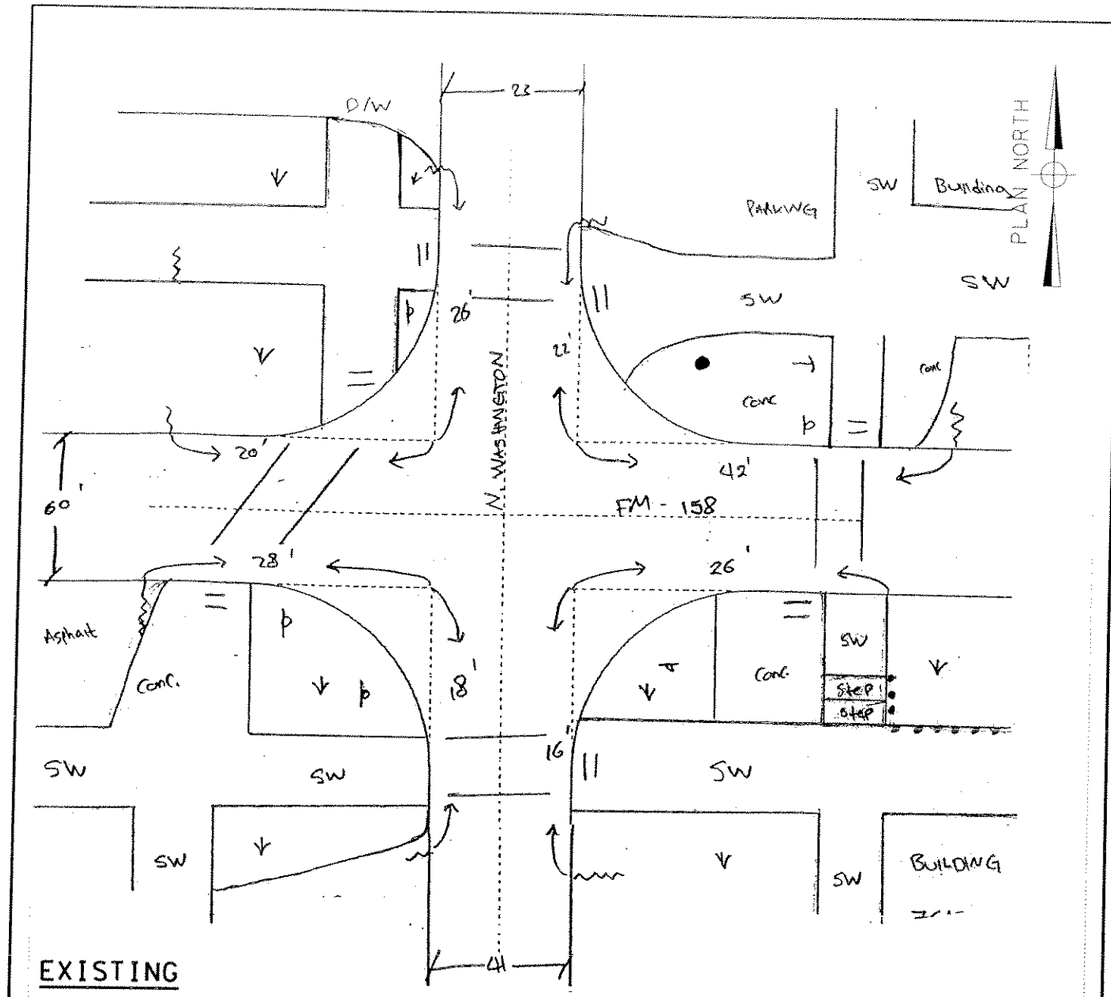

EXISTING

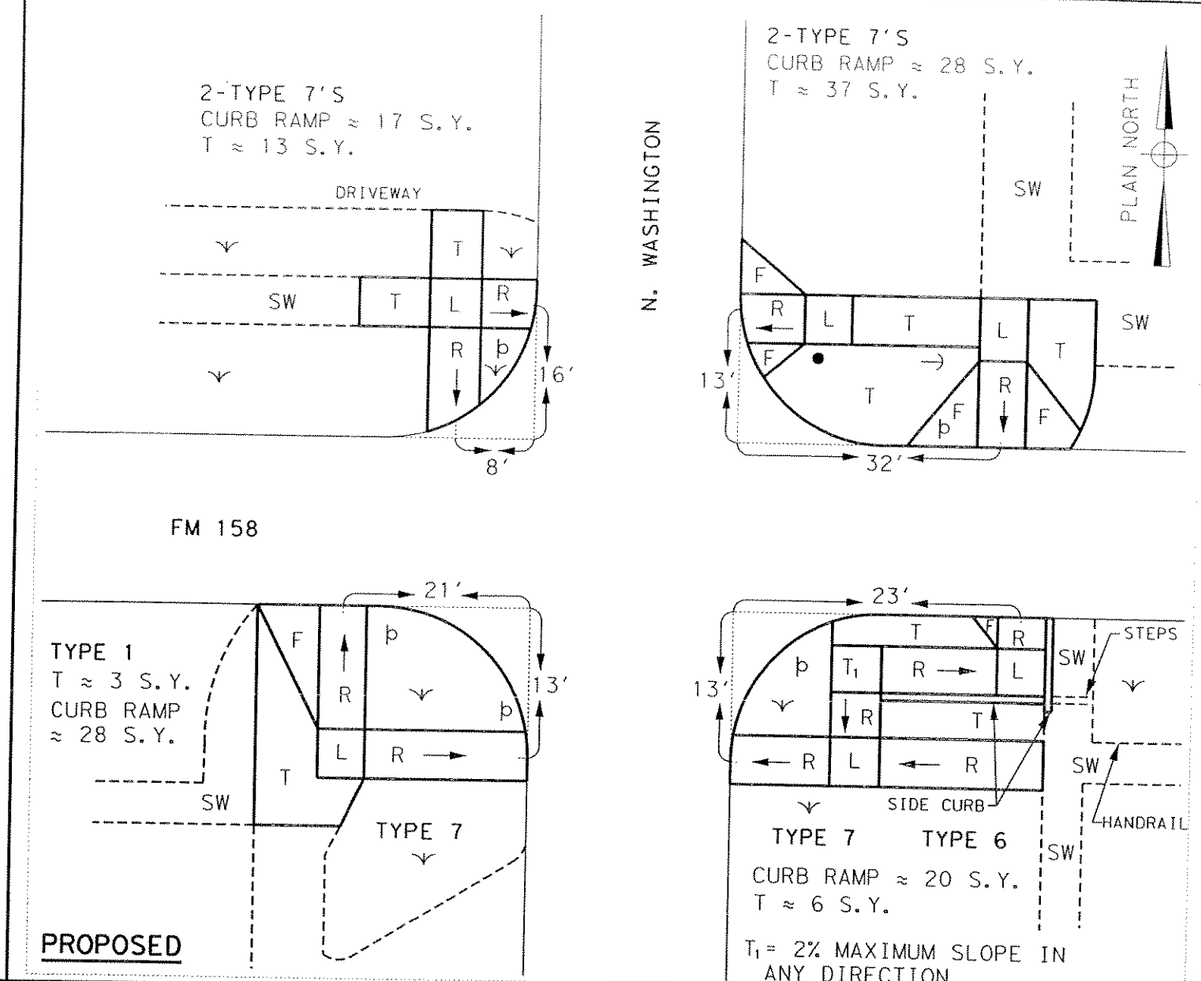

PROPOSED

LEGEND

- ● PP = POWER POLE
- GA = GUY ANCHOR
- TP = EX. TRAF. SIGNAL POLE
- PB = PED BUTTON
- Ⓟ = NEW PED POLE W/ PED BUTTON
- GB = GROUND BOX
- EL = ELECTRICAL PEDESTAL/BOX
- LP = LIGHT POLE
- FH = FIRE HYDRANT
- WV = WATER VALVE
- MH = MANHOLE
- IN = INLET
- TR = TREE
- SH = SHRUB; = GRASS
- SN = SIGN; = NEW CONDUIT
- CL = CONSTRUCTION LIMITS
- ER = EXIST RAMP; SW = SIDEWALK
- L = LANDING; R = RAMP
- F = FLARE; T = TRANSITION
- RC = REPLACE CURB/CURB & GUTTER

ITEM DESCRIPTION	UNIT	QUANT.
RETROFIT DETECTABLE WARNING SURFACE	EA	
REPLACE CONC CURB	LF	
CONC SIDEWALKS (6")	SY	59
REMOVING CONC (CURB & GUTTER)	LF	
ELEC CONDR BARE	LF	
CONDT (PVC)	LF	
TRF SIG CBL	LF	
PED DETECT (2 INCH PUSH BTN)	EA	
REMOVAL OF PEDESTRIAN PUSH BUTTONS	EA	
PED POLE ASSEMBLY	EA	
RELOC SM RD SN&AM(TY 10 BWG)	EA	
REF PAV MRK TY 1(W)12"(SLD)	LF	
REF PAV MRK TY 1(W)24"(SLD)	LF	
ELIM EXT PAV MRK & MRKS 12"	LF	
ELIM EXT PAV MRK & MRKS 24"	LF	

ITEM DESCRIPTION	UNIT	QUANT.
CURB RAMPS (TY 1) *	EA	1
CURB RAMPS (TY 2) *	EA	
CURB RAMPS (TY 3) *	EA	
CURB RAMPS (TY 4) *	EA	
CURB RAMPS (TY 5) *	EA	
CURB RAMPS (TY 6) *	EA	1
CURB RAMPS (TY 7) *	EA	6
CURB RAMPS (TY 9) *	EA	
CURB RAMPS (TY 10) *	EA	
CURB RAMPS (TY 20) *	EA	
CURB RAMPS (TY 21) *	EA	
CURB RAMPS (TY 22) *	EA	
CURB RAMPS	SY	93
ADJ MANHS	EA	
REPLACE GROUND BOX	EA	
RAIL (HANDRAIL)	LF	
DRIVEWAYS (CONC)	SY	
ADJUST METER BOX TO GRADE	EA	

ITEM DESCRIPTION	UNIT	QUANT.
COMPOST MANUF TOPSOIL	SY	18
EXCAVATION (SPECIAL)	CY	
BLOCK SODDING	SY	18

* = FOR CONTRACTOR'S INFORMATION "ONLY" NON-PAY ITEM

STATE OF TEXAS
SCOTT E DUKETTE
83615
LICENSED
PROFESSIONAL ENGINEER
11/19/07

N. T. S.

Texas Department of Transportation
©2007

H.R.Gray For Construction Success

klotz associates

ADA CURB RAMP PROGRAM
BRYAN, TEXAS
FM 158 AT
N. WASHINGTON

DN: AJS	FED. RD. DIV. NO.	STATE	STATE PROJECT NO.		HIGHWAY NO.
CK DN: SAS	6	TEXAS			VARIES
DW: GWG	STATE DIST.	COUNTY	CONTROL NO.	SECTION NO.	JOB NO. / SHEET NO.
CK DW: MS/SB	BRY	WALKER, ETC.	0917	27	035, ETC. / 111

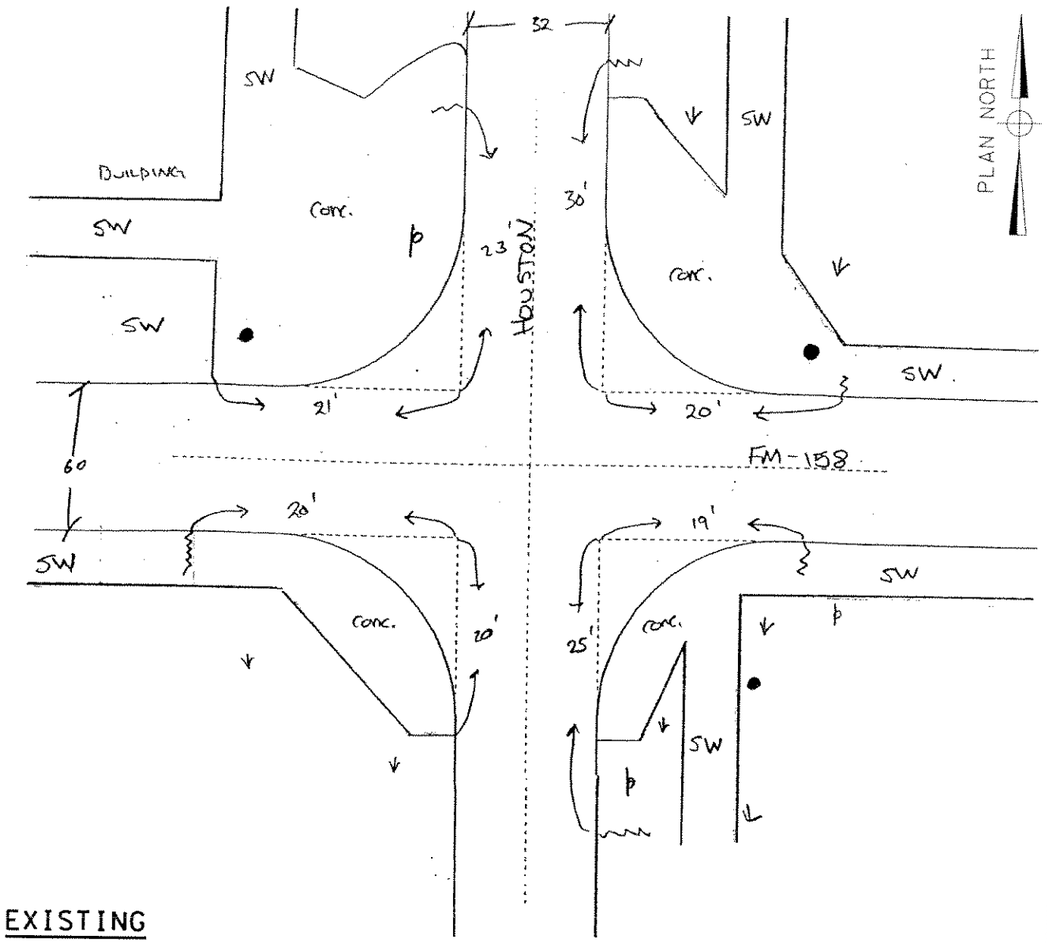

EXISTING

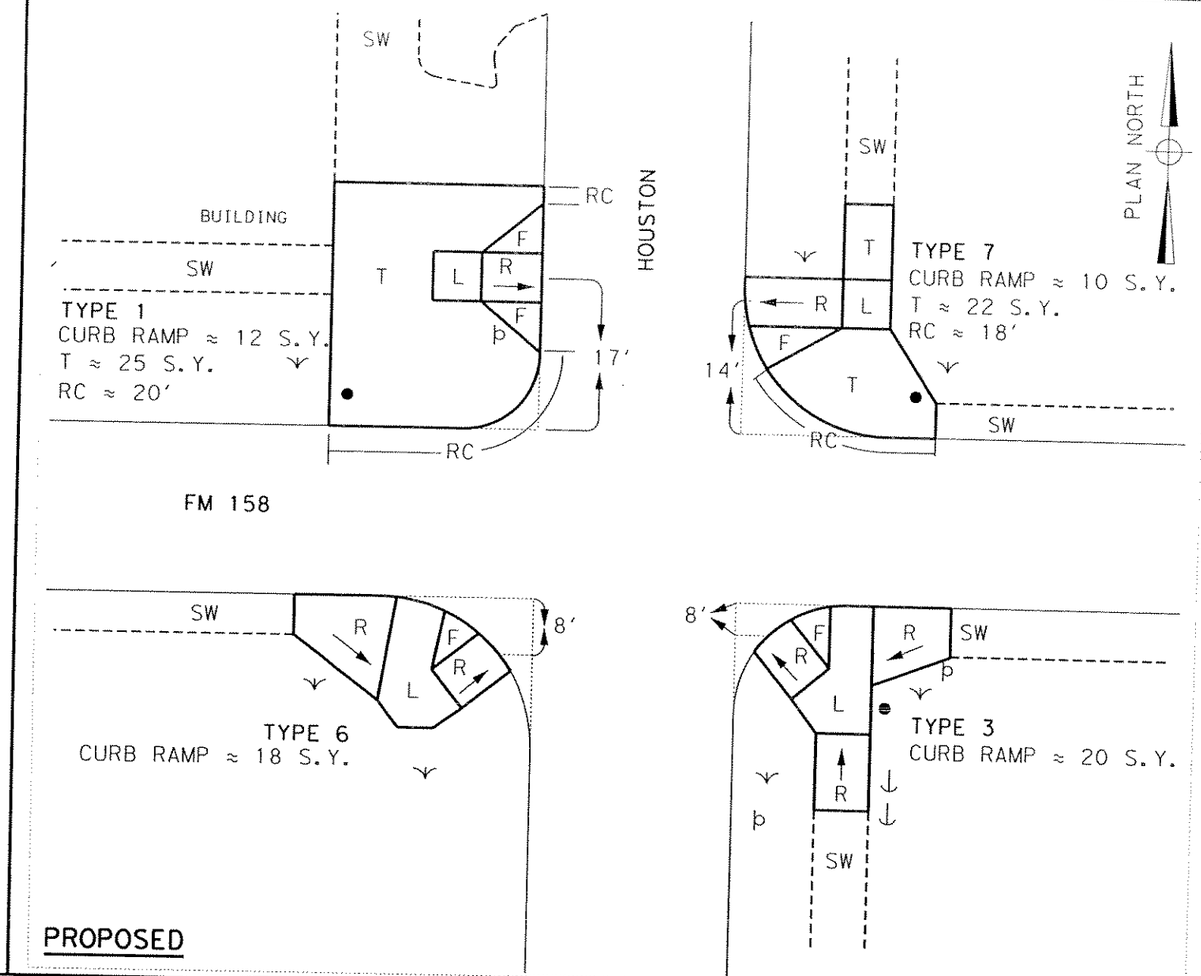

PROPOSED

LEGEND

- ● PP = POWER POLE
- GA = GUY ANCHOR
- TP = EX. TRAF. SIGNAL POLE
- PB = PED BUTTON
- Ⓟ = NEW PED POLE W/ PED BUTTON
- GB = GROUND BOX
- EL = ELECTRICAL PEDESTAL/BOX
- LP = LIGHT POLE
- FH = FIRE HYDRANT
- WV = WATER VALVE
- MH = MANHOLE
- IN = INLET
- TR = TREE
- SH = SHRUB; = GRASS
- SN = SIGN; = NEW CONDUIT
- CL = CONSTRUCTION LIMITS
- ER = EXIST RAMP; SW = SIDEWALK
- L = LANDING; R = RAMP
- F = FLARE; T = TRANSITION
- RC = REPLACE CURB/CURB & GUTTER

ITEM DESCRIPTION	UNIT	QUANT.
RETROFIT DETECTABLE WARNING SURFACE	EA	
REPLACE CONC CURB	LF	38
CONC SIDEWALKS (6")	SY	47
REMOVING CONC (CURB & GUTTER)	LF	38
ELEC CONDR BARE	LF	
CONDT (PVC)	LF	
TRF SIG CBL	LF	
PED DETECT (2 INCH PUSH BTN)	EA	
REMOVAL OF PEDESTRIAN PUSH BUTTONS	EA	
PED POLE ASSEMBLY	EA	
RELOC SM RD SN&AM(TY 10 BWG)	EA	
REF PAV MRK TY 1(W)12"(SLD)	LF	
REF PAV MRK TY 1(W)24"(SLD)	LF	
ELIM EXT PAV MRK & MRKS 12"	LF	
ELIM EXT PAV MRK & MRKS 24"	LF	

ITEM DESCRIPTION	UNIT	QUANT.
CURB RAMPS (TY 1) *	EA	1
CURB RAMPS (TY 2) *	EA	
CURB RAMPS (TY 3) *	EA	1
CURB RAMPS (TY 4) *	EA	
CURB RAMPS (TY 5) *	EA	
CURB RAMPS (TY 6) *	EA	1
CURB RAMPS (TY 7) *	EA	1
CURB RAMPS (TY 9) *	EA	
CURB RAMPS (TY 10) *	EA	
CURB RAMPS (TY 20) *	EA	
CURB RAMPS (TY 21) *	EA	
CURB RAMPS (TY 22) *	EA	
CURB RAMPS	SY	60
ADJ MANHS	EA	
REPLACE GROUND BOX	EA	
RAIL (HANDRAIL)	LF	
DRIVEWAYS (CONC)	SY	
ADJUST METER BOX TO GRADE	EA	

ITEM DESCRIPTION	UNIT	QUANT.
COMPOST MANUF TOPSOIL	SY	18
EXCAVATION (SPECIAL)	CY	
BLOCK SODDING	SY	18

* = FOR CONTRACTOR'S INFORMATION "ONLY" NON-PAY ITEM

STATE OF TEXAS
SCOTT E. DUKETTE
83615
LICENSED
PROFESSIONAL ENGINEER
12/6/07

N. T. S.

Texas Department of Transportation
©2007

H.R.Gray For Construction Success

klotz associates

ADA CURB RAMP PROGRAM
BRYAN, TEXAS
FM 158 AT
HOUSTON

DN: AJS	FED. RD. DIV. NO.	STATE	STATE PROJECT NO.		HIGHWAY NO.	
CK DN: SKS	6	TEXAS			VARIES	
DN: DWG						
CK DN: MS/SD	STATE DIST.	COUNTY	CONTROL NO.	SECTION NO.	JOB NO.	SHEET NO.
TR:	BRY	WALKER, ETC.	0917	27	035, ETC.	112
CK TR:						

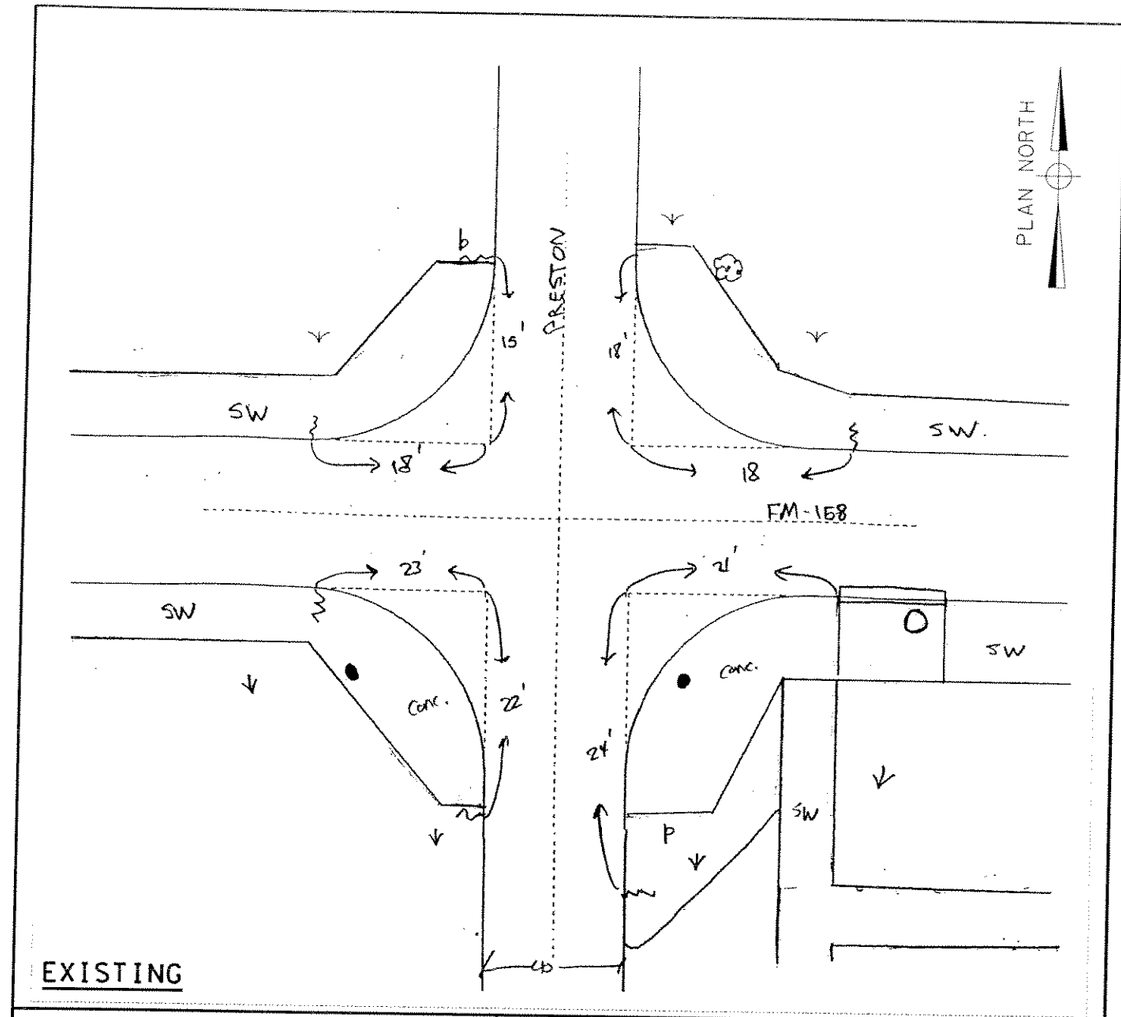

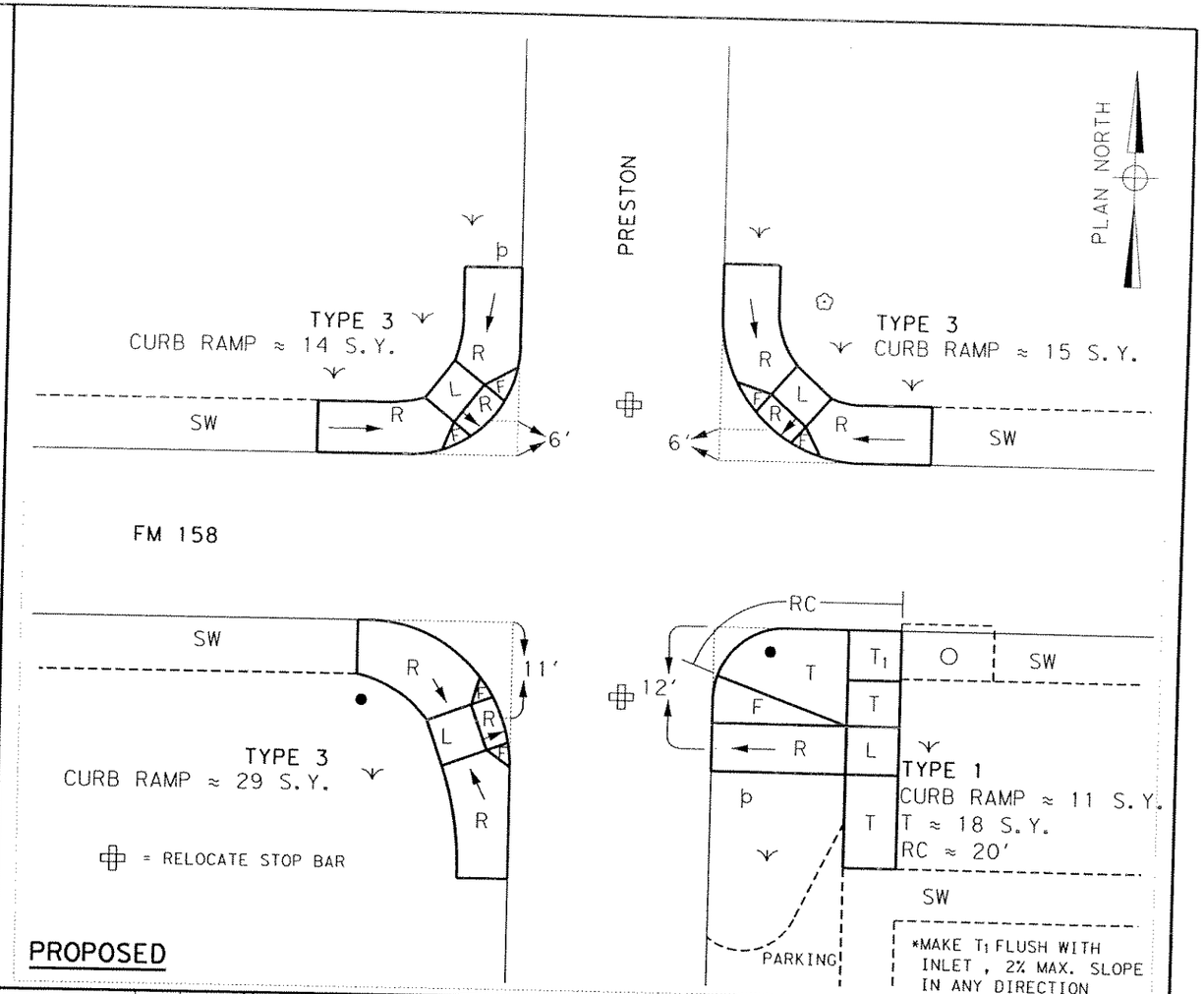

LEGEND

- ● PP = POWER POLE
- GA = GUY ANCHOR
- TP = EX. TRAF. SIGNAL POLE
- PB = PED BUTTON
- Ⓟ = NEW PED POLE W/ PED BUTTON
- GB = GROUND BOX
- EL = ELECTRICAL PEDESTAL/BOX
- LP = LIGHT POLE
- FH = FIRE HYDRANT
- WV = WATER VALVE
- MH = MANHOLE
- IN = INLET
- TR = TREE
- SH = SHRUB; = GRASS
- SN = SIGN; = NEW CONDUIT
- CL = CONSTRUCTION LIMITS
- ER = EXIST RAMP; SW = SIDEWALK
- L = LANDING; R = RAMP
- F = FLARE; T = TRANSITION
- RC = REPLACE CURB/CURB & GUTTER

ITEM DESCRIPTION	UNIT	QUANT.
RETROFIT DETECTABLE WARNING SURFACE	EA	
REPLACE CONC CURB	LF	20
CONC SIDEWALKS (6")	SY	18
REMOVING CONC (CURB & GUTTER)	LF	20
ELEC CONDR BARE	LF	
CONDT (PVC)	LF	
TRF SIG CBL	LF	
PED DETECT (2 INCH PUSH BTN)	EA	
REMOVAL OF PEDESTRIAN PUSH BUTTONS	EA	
PED POLE ASSEMBLY	EA	
RELOC SM RD SN&AM(TY 10 BWG)	EA	
REF PAV MRK TY 1(W)12"(SLD)	LF	
REF PAV MRK TY 1(W)24"(SLD)	LF	40
ELIM EXT PAV MRK & MRKS 12"	LF	
ELIM EXT PAV MRK & MRKS 24"	LF	40

ITEM DESCRIPTION	UNIT	QUANT.
CURB RAMPS (TY 1) *	EA	1
CURB RAMPS (TY 2) *	EA	
CURB RAMPS (TY 3) *	EA	3
CURB RAMPS (TY 4) *	EA	
CURB RAMPS (TY 5) *	EA	
CURB RAMPS (TY 6) *	EA	
CURB RAMPS (TY 7) *	EA	
CURB RAMPS (TY 9) *	EA	
CURB RAMPS (TY 10) *	EA	
CURB RAMPS (TY 20) *	EA	
CURB RAMPS (TY 21) *	EA	
CURB RAMPS (TY 22) *	EA	
CURB RAMPS	SY	69
ADJ MANHS	EA	
REPLACE GROUND BOX	EA	
RAIL (HANDRAIL)	LF	
DRIVEWAYS (CONC)	SY	
ADJUST METER BOX TO GRADE	EA	

ITEM DESCRIPTION	UNIT	QUANT.
COMPOST MANUF TOPSOIL	SY	15
EXCAVATION (SPECIAL)	CY	
BLOCK SODDING	SY	15

* = FOR CONTRACTOR'S INFORMATION "ONLY" NON-PAY ITEM

STATE OF TEXAS
SCOTT E DUKETTE
83615
LICENSED
PROFESSIONAL ENGINEER
12/6/07

N. T. S.

Texas Department of Transportation
©2007

H.R.Gray For Construction Success

klotz associates

ADA CURB RAMP PROGRAM

BRYAN, TEXAS
FM 158 AT
PRESTON

DN: AJS	FED. RD. DIV. NO.	STATE	STATE PROJECT NO.		HIGHWAY NO.	
CK DN: SAS	6	TEXAS			VARIES	
DW: GMC	STATE DIST.	COUNTY		CONTROL NO.	SECTION NO.	JOB NO.	SHEET NO.
CK DN: MS/SD	BRY	WALKER, ETC.		0917	27	035, ETC.	113
TR:							
CK TR:							

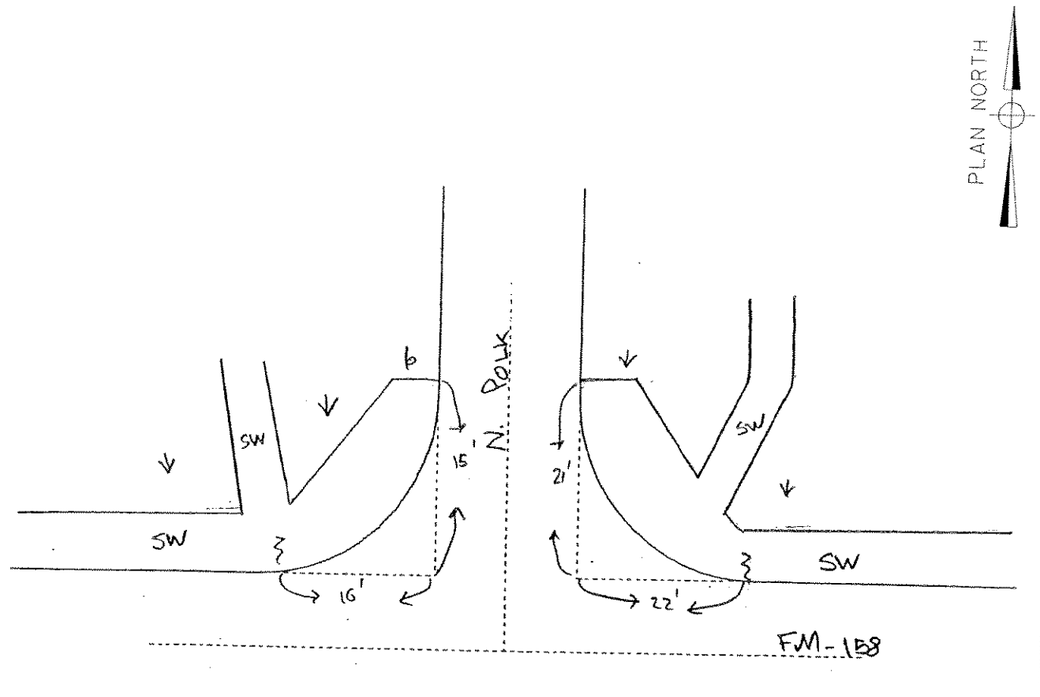

EXISTING

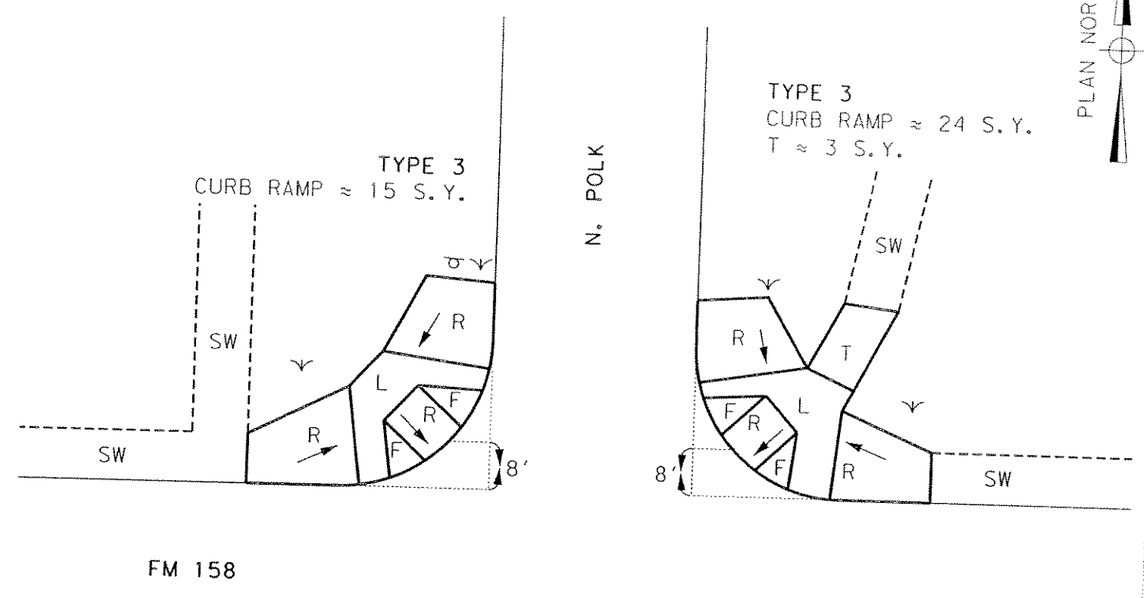

PROPOSED

LEGEND

- ● PP = POWER POLE
- GA = GUY ANCHOR
- ⊙ TP = EX. TRAF. SIGNAL POLE
- PB = PED BUTTON
- Ⓟ = NEW PED POLE W/ PED BUTTON
- ⊠ GB = GROUND BOX
- EL = ELECTRICAL PEDESTAL/BOX
- LP = LIGHT POLE
- FH = FIRE HYDRANT
- WV = WATER VALVE
- MH = MANHOLE
- IN = INLET
- TR = TREE
- SH = SHRUB; GRASS
- SN = SIGN; NEW CONDUIT
- CL = CONSTRUCTION LIMITS
- ER = EXIST RAMP; SW = SIDEWALK
- L = LANDING; R = RAMP
- F = FLARE; T = TRANSITION
- RC = REPLACE CURB/CURB & GUTTER

ITEM DESCRIPTION	UNIT	QUANT.
RETROFIT DETECTABLE WARNING SURFACE	EA	
REPLACE CONC CURB	LF	
CONC SIDEWALKS (6")	SY	3
REMOVING CONC (CURB & GUTTER)	LF	
ELEC CONDR BARE	LF	
CONDT (PVC)	LF	
TRF SIG CBL	LF	
PED DETECT (2 INCH PUSH BTN)	EA	
REMOVAL OF PEDESTRIAN PUSH BUTTONS	EA	
PED POLE ASSEMBLY	EA	
RELOC SM RD SN&AM(TY 10 BWG)	EA	
REF PAV MRK TY 1(W)12"(SLD)	LF	
REF PAV MRK TY 1(W)24"(SLD)	LF	
ELIM EXT PAV MRK & MRKS 12"	LF	
ELIM EXT PAV MRK & MRKS 24"	LF	

ITEM DESCRIPTION	UNIT	QUANT.
CURB RAMPS (TY 1) *	EA	
CURB RAMPS (TY 2) *	EA	
CURB RAMPS (TY 3) *	EA	2
CURB RAMPS (TY 4) *	EA	
CURB RAMPS (TY 5) *	EA	
CURB RAMPS (TY 6) *	EA	
CURB RAMPS (TY 7) *	EA	
CURB RAMPS (TY 9) *	EA	
CURB RAMPS (TY 10) *	EA	
CURB RAMPS (TY 20) *	EA	
CURB RAMPS (TY 21) *	EA	
CURB RAMPS (TY 22) *	EA	
CURB RAMPS	SY	39
ADJ MANHS	EA	
REPLACE GROUND BOX	EA	
RAIL (HANDRAIL)	LF	
DRIVEWAYS (CONC)	SY	
ADJUST METER BOX TO GRADE	EA	

ITEM DESCRIPTION	UNIT	QUANT.
COMPOST MANUF TOPSOIL	SY	8
EXCAVATION (SPECIAL)	CY	
BLOCK SODDING	SY	8

* = FOR CONTRACTOR'S INFORMATION "ONLY" NON-PAY ITEM

STATE OF TEXAS
SCOTT E. DUKETTE
83615
LICENSED
PROFESSIONAL ENGINEER
1/12/07

N. T. S.

Texas Department of Transportation
©2007

H.R.Gray For Construction Success

klotz associates

ADA CURB RAMP PROGRAM
BRYAN, TEXAS
FM 158 AT
N. POLK

DN: AJS					
CK DN: SAS					
DW: DMG					
CK DW: MS/SD					
TRI:					
CK TRI:					

FED. RD. DIV. NO.	STATE	STATE PROJECT NO.			HIGHWAY NO.
6	TEXAS				VARIES
STATE DIST.	COUNTY		CONTROL NO.	SECTION NO.	JOB NO.	SHEET NO.
BRY	WALKER, ETC.		0917	27	035, ETC.	114

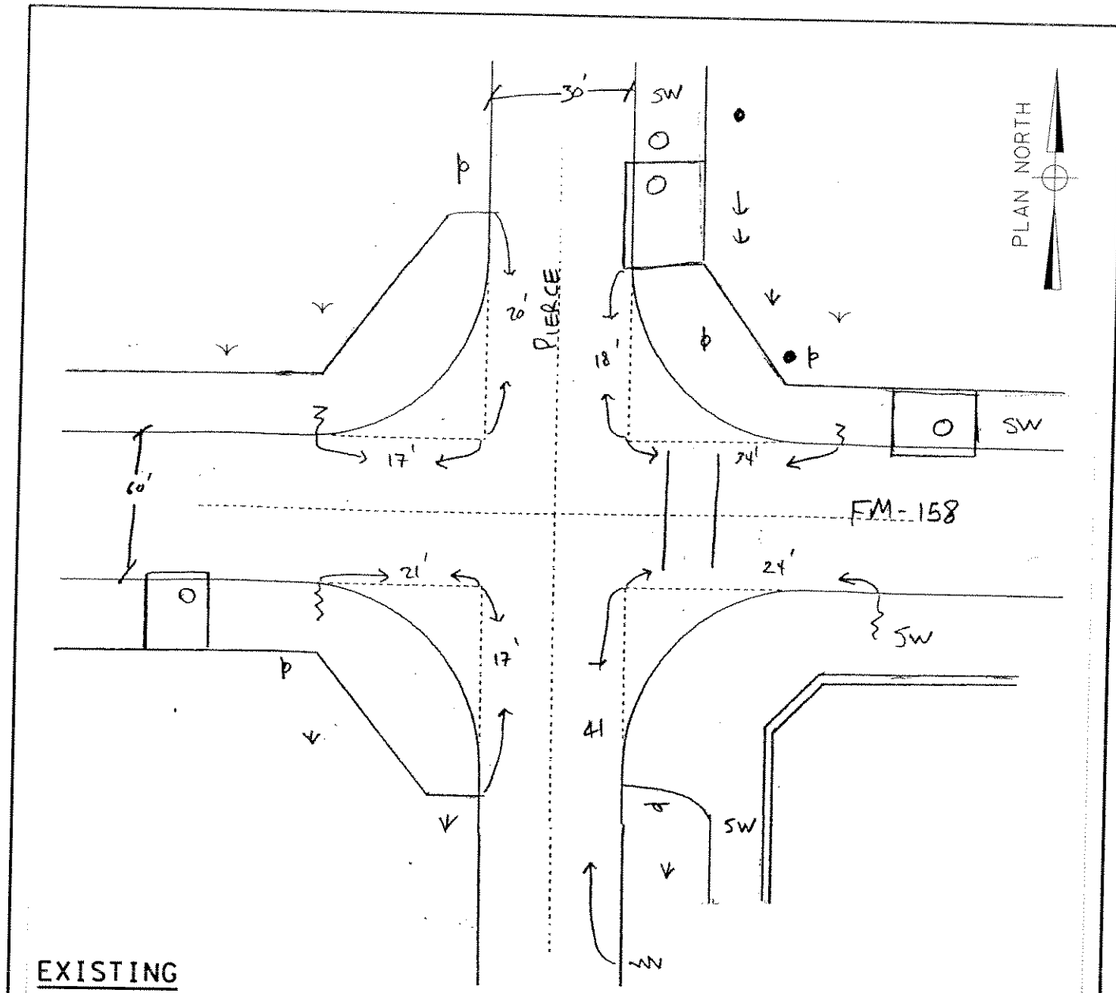

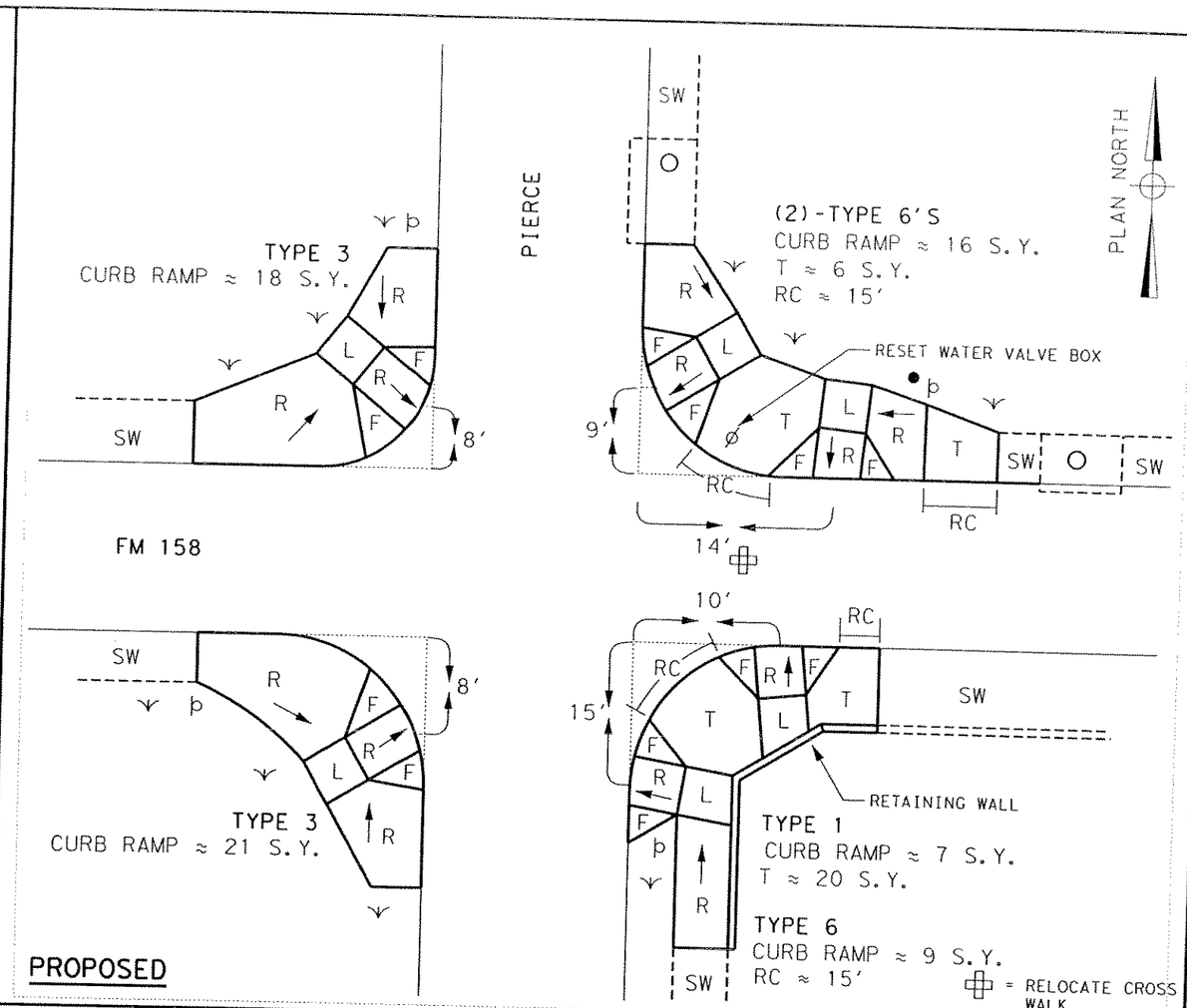

LEGEND

- PP = POWER POLE
- GA = GUY ANCHOR
- TP = EX. TRAF. SIGNAL POLE
- PB = PED BUTTON
- (P) = NEW PED POLE W/ PED BUTTON
- GB = GROUND BOX
- EL = ELECTRICAL PEDESTAL/BOX
- LP = LIGHT POLE
- FH = FIRE HYDRANT
- WV = WATER VALVE
- MH = MANHOLE
- IN = INLET
- TR = TREE
- SH = SHRUB; = GRASS
- SN = SIGN; = NEW CONDUIT
- CL = CONSTRUCTION LIMITS
- ER = EXIST RAMP; SW = SIDEWALK
- L = LANDING; R = RAMP
- F = FLARE; T = TRANSITION
- RC = REPLACE CURB/CURB & GUTTER

ITEM DESCRIPTION	UNIT	QUANT.
RETROFIT DETECTABLE WARNING SURFACE	EA	
REPLACE CONC CURB	LF	30
CONC SIDEWALKS (6")	SY	26
REMOVING CONC (CURB & GUTTER)	LF	30
ELEC CONDR BARE	LF	
CONDT (PVC)	LF	
TRF SIG CBL	LF	
PED DETECT (2 INCH PUSH BTN)	EA	
REMOVAL OF PEDESTRIAN PUSH BUTTONS	EA	
PED POLE ASSEMBLY	EA	
RELOC SM RD SN&AM(TY 10 BWG)	EA	
REF PAV MRK TY 1(W)12"(SLD)	LF	120
REF PAV MRK TY 1(W)24"(SLD)	LF	
ELIM EXT PAV MRK & MRKS 12"	LF	120
ELIM EXT PAV MRK & MRKS 24"	LF	

ITEM DESCRIPTION	UNIT	QUANT.
CURB RAMPS (TY 1) *	EA	1
CURB RAMPS (TY 2) *	EA	
CURB RAMPS (TY 3) *	EA	2
CURB RAMPS (TY 4) *	EA	
CURB RAMPS (TY 5) *	EA	
CURB RAMPS (TY 6) *	EA	3
CURB RAMPS (TY 7) *	EA	
CURB RAMPS (TY 9) *	EA	
CURB RAMPS (TY 10) *	EA	
CURB RAMPS (TY 20) *	EA	
CURB RAMPS (TY 21) *	EA	
CURB RAMPS (TY 22) *	EA	
CURB RAMPS	SY	71
ADJ MANHS	EA	
REPLACE GROUND BOX	EA	
RAIL (HANDRAIL)	LF	
DRIVEWAYS (CONC)	SY	
ADJUST METER BOX TO GRADE	EA	

ITEM DESCRIPTION	UNIT	QUANT.
COMPOST MANUF TOPSOIL	SY	18
EXCAVATION (SPECIAL)	CY	
BLOCK SODDING	SY	18
RET. WALL (CONC BLOCK)	SF	53

* = FOR CONTRACTOR'S INFORMATION "ONLY" NON-PAY ITEM

STATE OF TEXAS
SCOTT E DUKETTE
83615
LICENSED
PROFESSIONAL ENGINEER
12/6/07

N. T. S.

Texas Department of Transportation
©2007

H.R.Gray For Construction Success

klotz associates

ADA CURB RAMP PROGRAM
BRYAN, TEXAS
FM 158 AT
PIERCE

DN: AJS	FED. RD. DIV. NO.	STATE	STATE PROJECT NO.		HIGHWAY NO.
CK DN: SAS	6	TEXAS			VARIES
DW: GWE	STATE DIST.	COUNTY	CONTROL NO.	SECTION NO.	JOB NO. / SHEET NO.
CK DW: MS/SG	BRY	WALKER, ETC.	0917	27	035, ETC. / 115

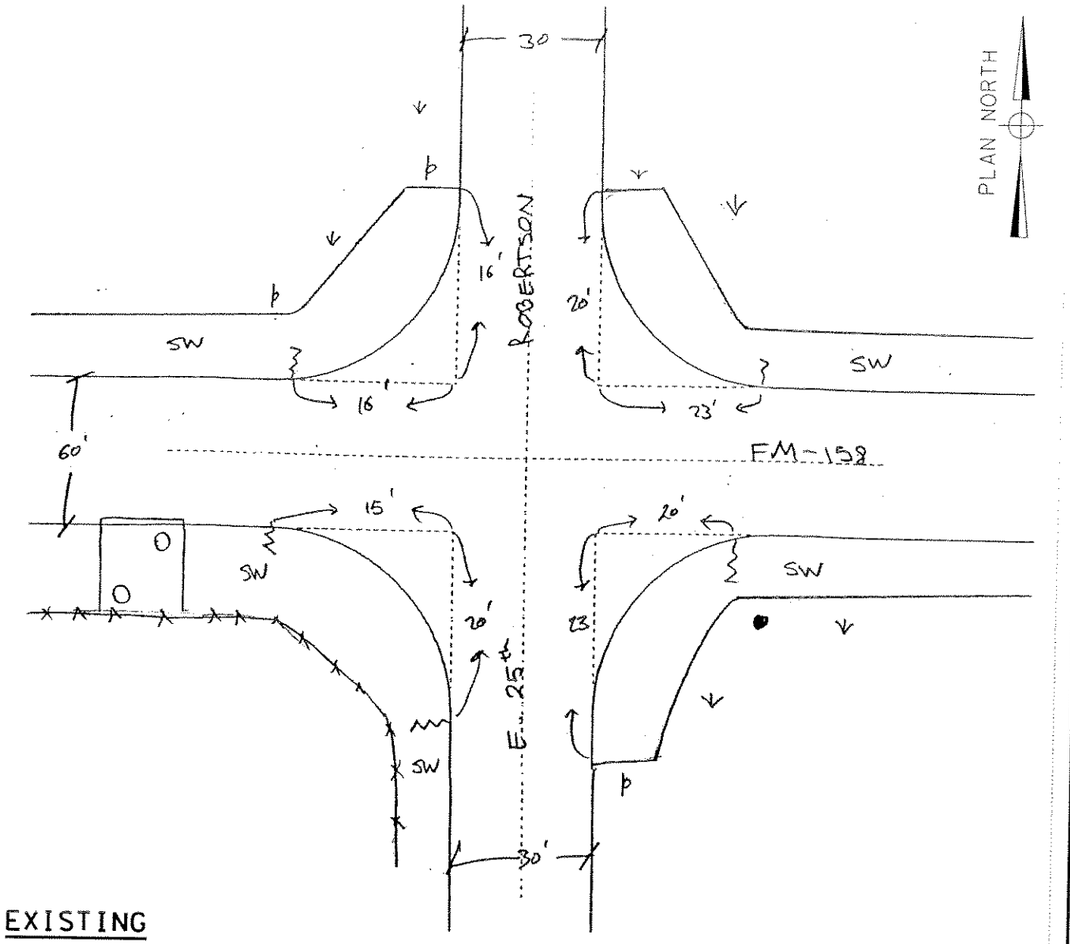

EXISTING

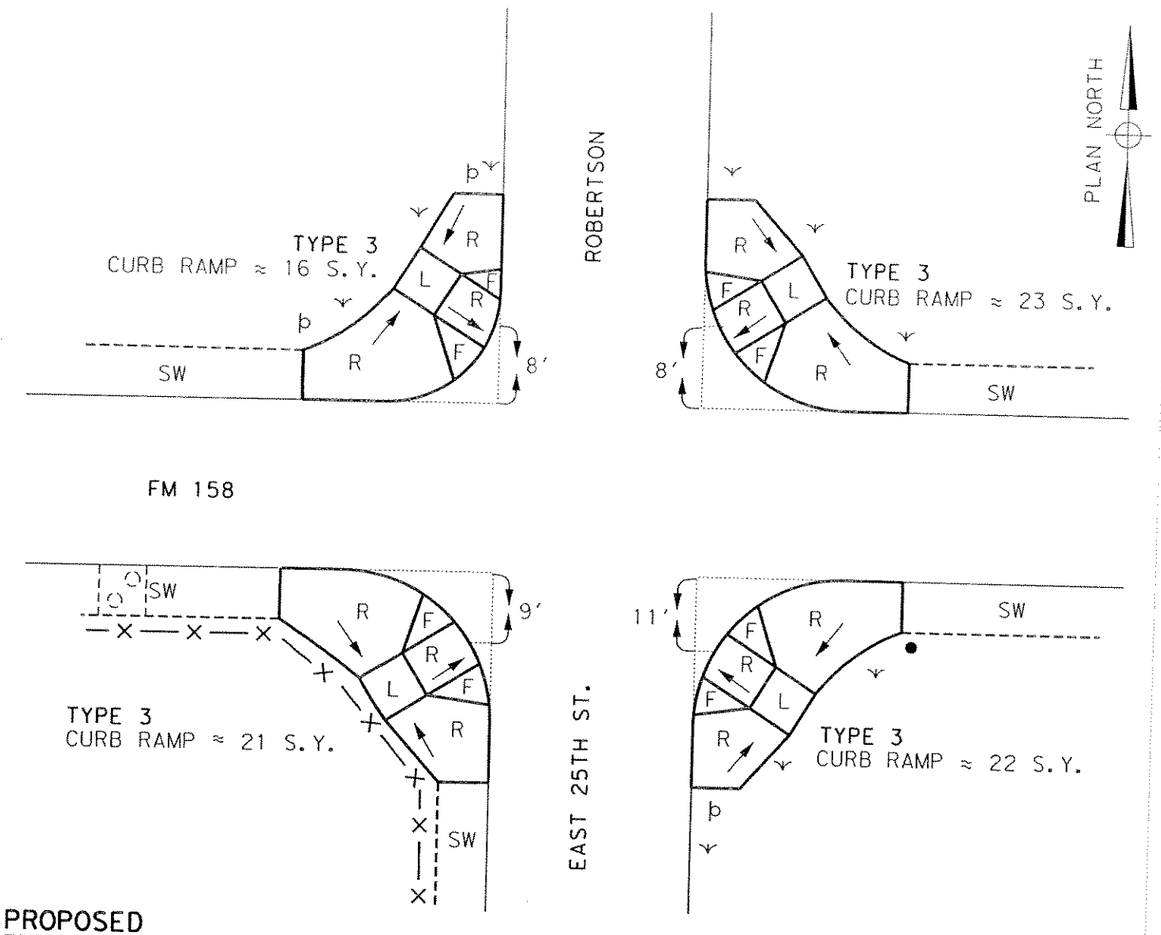

PROPOSED

LEGEND

- PP = POWER POLE
- GA = GUY ANCHOR
- TP = EX. TRAF. SIGNAL POLE
- PB = PED BUTTON
- (P) = NEW PED POLE W/ PED BUTTON
- GB = GROUND BOX
- EL = ELECTRICAL PEDESTAL/BOX
- LP = LIGHT POLE
- FH = FIRE HYDRANT
- WV = WATER VALVE
- MH = MANHOLE
- IN = INLET
- TR = TREE
- SH = SHRUB; = GRASS
- SN = SIGN; = NEW CONDUIT
- CL = CONSTRUCTION LIMITS
- ER = EXIST RAMP; SW = SIDEWALK
- L = LANDING; R = RAMP
- F = FLARE; T = TRANSITION
- RC = REPLACE CURB/CURB & GUTTER

ITEM DESCRIPTION	UNIT	QUANT.
RETROFIT DETECTABLE WARNING SURFACE	EA	
REPLACE CONC CURB	LF	
CONC SIDEWALKS (6")	SY	
REMOVING CONC (CURB & GUTTER)	LF	
ELEC CONDR BARE	LF	
CONDT (PVC)	LF	
TRF SIG CBL	LF	
PED DETECT (2 INCH PUSH BTN)	EA	
REMOVAL OF PEDESTRIAN PUSH BUTTONS	EA	
PED POLE ASSEMBLY	EA	
RELOC SM RD SN&AM(TY 10 BWG)	EA	
REF PAV MRK TY 1(W)12"(SLD)	LF	
REF PAV MRK TY 1(W)24"(SLD)	LF	
ELIM EXT PAV MRK & MRKS 12"	LF	
ELIM EXT PAV MRK & MRKS 24"	LF	

ITEM DESCRIPTION	UNIT	QUANT.
CURB RAMPS (TY 1) *	EA	
CURB RAMPS (TY 2) *	EA	
CURB RAMPS (TY 3) *	EA	4
CURB RAMPS (TY 4) *	EA	
CURB RAMPS (TY 5) *	EA	
CURB RAMPS (TY 6) *	EA	
CURB RAMPS (TY 7) *	EA	
CURB RAMPS (TY 9) *	EA	
CURB RAMPS (TY 10) *	EA	
CURB RAMPS (TY 20) *	EA	
CURB RAMPS (TY 21) *	EA	
CURB RAMPS (TY 22) *	EA	
CURB RAMPS	SY	82
ADJ MANHS	EA	
REPLACE GROUND BOX	EA	
RAIL (HANDRAIL)	LF	
DRIVEWAYS (CONC)	SY	
ADJUST METER BOX TO GRADE	EA	

ITEM DESCRIPTION	UNIT	QUANT.
COMPOST MANUF TOPSOIL	SY	11
EXCAVATION (SPECIAL)	CY	
BLOCK SODDING	SY	11

* = FOR CONTRACTOR'S INFORMATION "ONLY" NON-PAY ITEM

STATE OF TEXAS
SCOTT E DUKETTE
83615
LICENSED
PROFESSIONAL ENGINEER
11/19/07

N. T. S.

Texas Department of Transportation
©2007

H.R.Gray For Construction Success

klotz associates

ADA CURB RAMP PROGRAM
BRYAN, TEXAS
FM 158 AT
ROBERTSON/EAST 25TH ST.

DN: AJS	FED. RD. DIV. NO.	STATE	STATE PROJECT NO.	HIGHWAY NO.
CK DN: GAS	6	TEXAS		VARIES
DN: GWG	STATE DIST.	COUNTY	CONTROL NO. / SECTION NO.	JOB NO. / SHEET NO.
CK DN: MSFSD	BRY	WALKER, ETC.	0917 / 27	035, ETC / 116
TR:				
CK TR:				

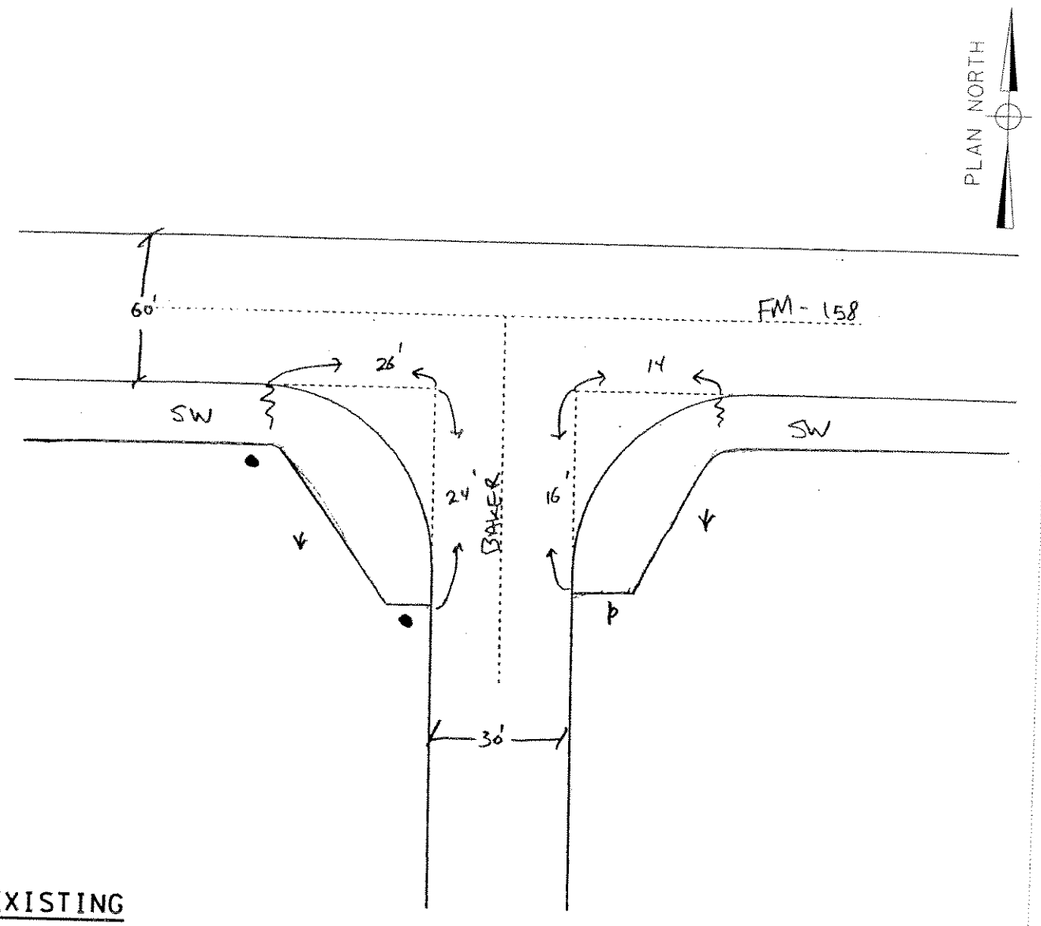

EXISTING

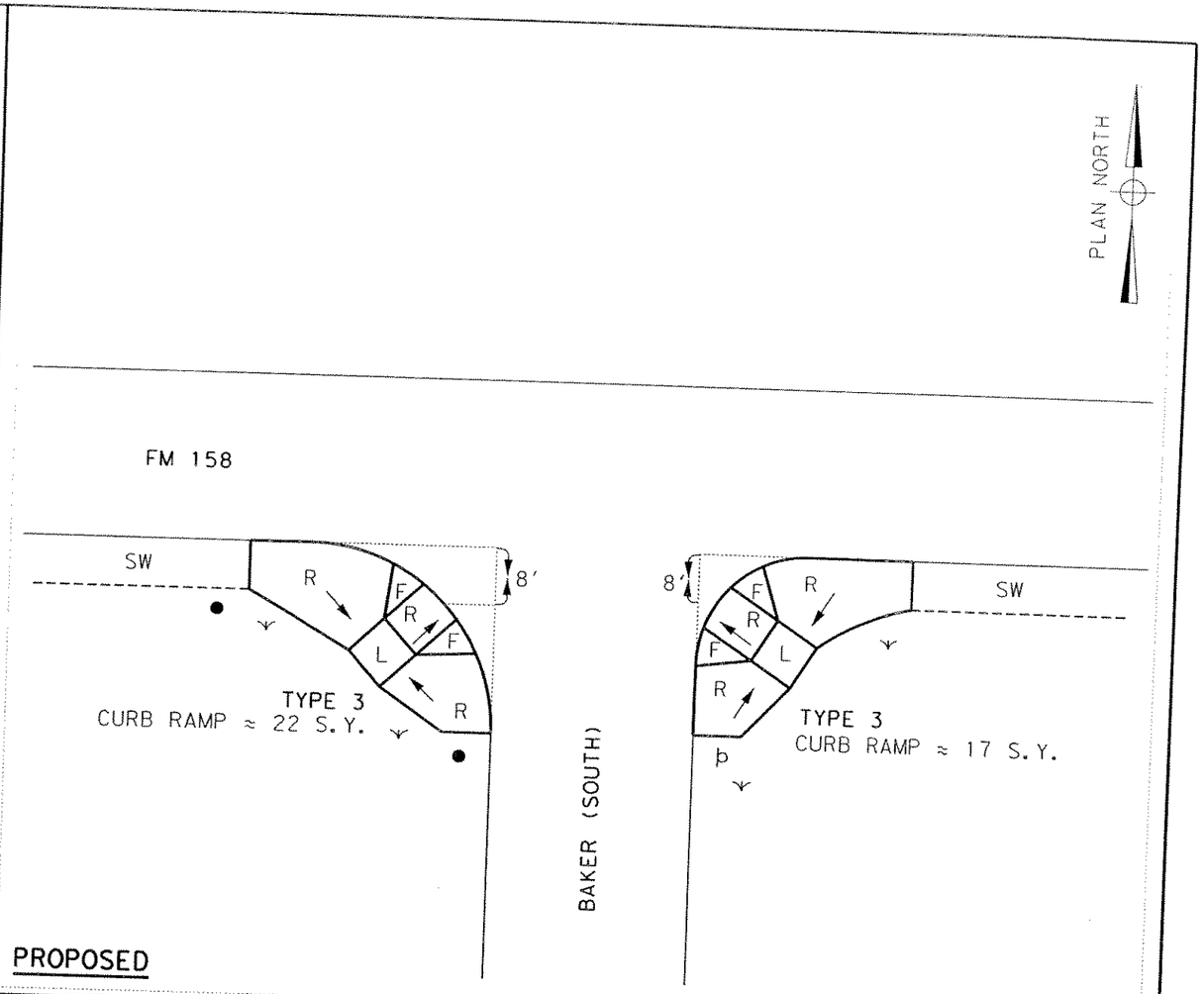

PROPOSED

LEGEND

- ● PP = POWER POLE
- GA = GUY ANCHOR
- TP = EX. TRAF. SIGNAL POLE
- PB = PED BUTTON
- Ⓟ = NEW PED POLE W/ PED BUTTON
- GB = GROUND BOX
- EL = ELECTRICAL PEDESTAL/BOX
- LP = LIGHT POLE
- FH = FIRE HYDRANT
- WV = WATER VALVE
- MH = MANHOLE
- IN = INLET
- TR = TREE
- SH = SHRUB; = GRASS
- SN = SIGN; ····· = NEW CONDUIT
- CL = CONSTRUCTION LIMITS
- ER = EXIST RAMP; SW = SIDEWALK
- L = LANDING; R = RAMP
- F = FLARE; T = TRANSITION
- RC = REPLACE CURB/CURB & GUTTER

ITEM DESCRIPTION	UNIT	QUANT.
RETROFIT DETECTABLE WARNING SURFACE	EA	
REPLACE CONC CURB	LF	
CONC SIDEWALKS (6")	SY	
REMOVING CONC (CURB & GUTTER)	LF	
ELEC CONDR BARE	LF	
CONDT (PVC)	LF	
TRF SIG CBL	LF	
PED DETECT (2 INCH PUSH BTN)	EA	
REMOVAL OF PEDESTRIAN PUSH BUTTONS	EA	
PED POLE ASSEMBLY	EA	
RELOC SM RD SN&AM(TY 10 BWG)	EA	
REF PAV MRK TY 1(W)12"(SLD)	LF	
REF PAV MRK TY 1(W)24"(SLD)	LF	
ELIM EXT PAV MRK & MRKS 12"	LF	
ELIM EXT PAV MRK & MRKS 24"	LF	

ITEM DESCRIPTION	UNIT	QUANT.
CURB RAMPS (TY 1) *	EA	
CURB RAMPS (TY 2) *	EA	
CURB RAMPS (TY 3) *	EA	2
CURB RAMPS (TY 4) *	EA	
CURB RAMPS (TY 5) *	EA	
CURB RAMPS (TY 6) *	EA	
CURB RAMPS (TY 7) *	EA	
CURB RAMPS (TY 9) *	EA	
CURB RAMPS (TY 10) *	EA	
CURB RAMPS (TY 20) *	EA	
CURB RAMPS (TY 21) *	EA	
CURB RAMPS (TY 22) *	EA	
CURB RAMPS	SY	39
ADJ MANHS	EA	
REPLACE GROUND BOX	EA	
RAIL (HANDRAIL)	LF	
DRIVEWAYS (CONC)	SY	
ADJUST METER BOX TO GRADE	EA	

ITEM DESCRIPTION	UNIT	QUANT.
COMPOST MANUF TOPSOIL	SY	7
EXCAVATION (SPECIAL)	CY	
BLOCK SODDING	SY	7

* = FOR CONTRACTOR'S INFORMATION "ONLY" NON-PAY ITEM

STATE OF TEXAS
SCOTT E. DUKETTE
83615
LICENSED
PROFESSIONAL ENGINEER
11/19/07

N. T. S.

Texas Department of Transportation
©2007

H.R.Gray For Construction Success

klotz associates

ADA CURB RAMP PROGRAM
BRYAN, TEXAS
FM 158 AT
BAKER (SOUTH)

DN: AJS	FED. RD. DIV. NO.	STATE	STATE PROJECT NO.		HIGHWAY NO.
CK DN: SES	6	TEXAS			VARIES
DW: CWD	STATE DIST.	COUNTY	CONTROL NO.	SECTION NO.	JOB NO. / SHEET NO.
CK DW: MSJSD	BRY	WALKER, ETC.	0917	27	035, ETC. / 117
TR:					
CK TR:					

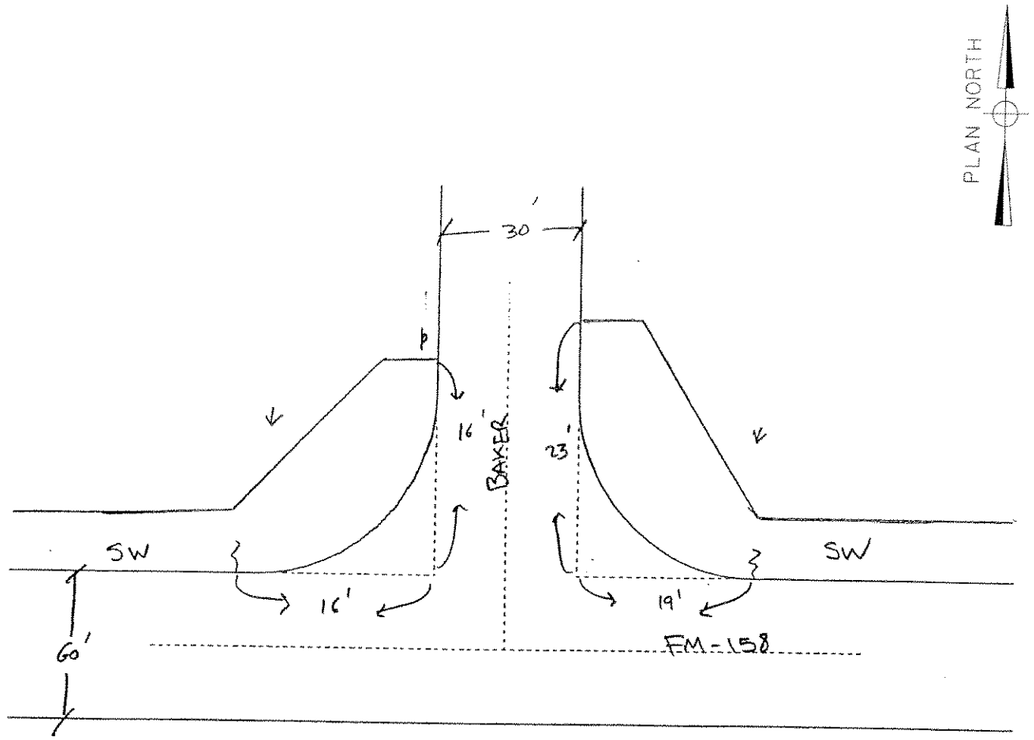

EXISTING

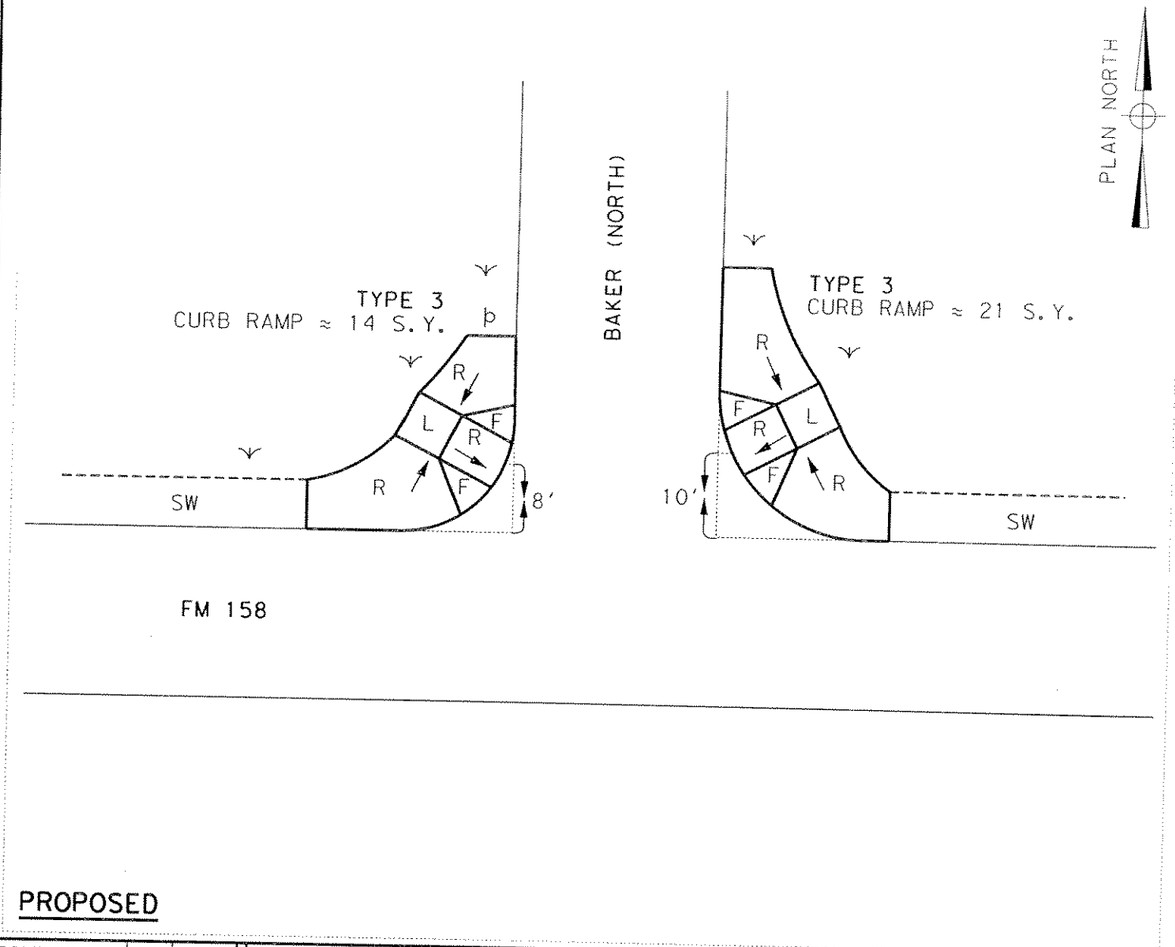

PROPOSED

LEGEND

- ● PP = POWER POLE
- GA = GUY ANCHOR
- TP = EX. TRAF. SIGNAL POLE
- PB = PED BUTTON
- Ⓟ = NEW PED POLE W/ PED BUTTON
- GB = GROUND BOX
- EL = ELECTRICAL PEDESTAL/BOX
- LP = LIGHT POLE
- FH = FIRE HYDRANT
- WV = WATER VALVE
- MH = MANHOLE
- IN = INLET
- TR = TREE
- SH = SHRUB; = GRASS
- SN = SIGN; ····· = NEW CONDUIT
- CL = CONSTRUCTION LIMITS
- ER = EXIST RAMP; SW = SIDEWALK
- L = LANDING; R = RAMP
- F = FLARE; T = TRANSITION
- RC = REPLACE CURB/CURB & GUTTER

ITEM DESCRIPTION	UNIT	QUANT.
RETROFIT DETECTABLE WARNING SURFACE	EA	
REPLACE CONC CURB	LF	
CONC SIDEWALKS (6")	SY	
REMOVING CONC (CURB & GUTTER)	LF	
ELEC CONDR BARE	LF	
CONDT (PVC)	LF	
TRF SIG CBL	LF	
PED DETECT (2 INCH PUSH BTN)	EA	
REMOVAL OF PEDESTRIAN PUSH BUTTONS	EA	
PED POLE ASSEMBLY	EA	
RELOC SM RD SN&AM(TY 10 BWG)	EA	
REF PAV MRK TY 1(W)12"(SLD)	LF	
REF PAV MRK TY 1(W)24"(SLD)	LF	
ELIM EXT PAV MRK & MRKS 12"	LF	
ELIM EXT PAV MRK & MRKS 24"	LF	

ITEM DESCRIPTION	UNIT	QUANT.
CURB RAMPS (TY 1) *	EA	
CURB RAMPS (TY 2) *	EA	
CURB RAMPS (TY 3) *	EA	2
CURB RAMPS (TY 4) *	EA	
CURB RAMPS (TY 5) *	EA	
CURB RAMPS (TY 6) *	EA	
CURB RAMPS (TY 7) *	EA	
CURB RAMPS (TY 9) *	EA	
CURB RAMPS (TY 10) *	EA	
CURB RAMPS (TY 20) *	EA	
CURB RAMPS (TY 21) *	EA	
CURB RAMPS (TY 22) *	EA	
CURB RAMPS	SY	35
ADJ MANHS	EA	
REPLACE GROUND BOX	EA	
RAIL (HANDRAIL)	LF	
DRIVEWAYS (CONC)	SY	
ADJUST METER BOX TO GRADE	EA	

ITEM DESCRIPTION	UNIT	QUANT.
COMPOST MANUF TOPSOIL	SY	7
EXCAVATION (SPECIAL)	CY	
BLOCK SODDING	SY	7

* = FOR CONTRACTOR'S INFORMATION "ONLY" NON-PAY ITEM

STATE OF TEXAS
SCOTT E DUKETTE
83615
LICENSED
PROFESSIONAL ENGINEER
11/19/07

N. T. S.

Texas Department of Transportation
©2007

H.R.Gray For Construction Success

klotz associates

ADA CURB RAMP PROGRAM
BRYAN, TEXAS
FM 158 AT
BAKER (NORTH)

DN: AJS	FED. RD. DIV. NO.	STATE	STATE PROJECT NO.			HIGHWAY NO.
CK. DN: SAS	6	TEXAS				VARIES
DW: CMG	STATE DIST.	COUNTY		CONTROL NO.	SECTION NO.	JOB NO.	SHEET NO.
CK. DW: MS/SD	BRY	WALKER, ETC.		0917	27	035, ETC.	118
TR:							
CK. TR:							

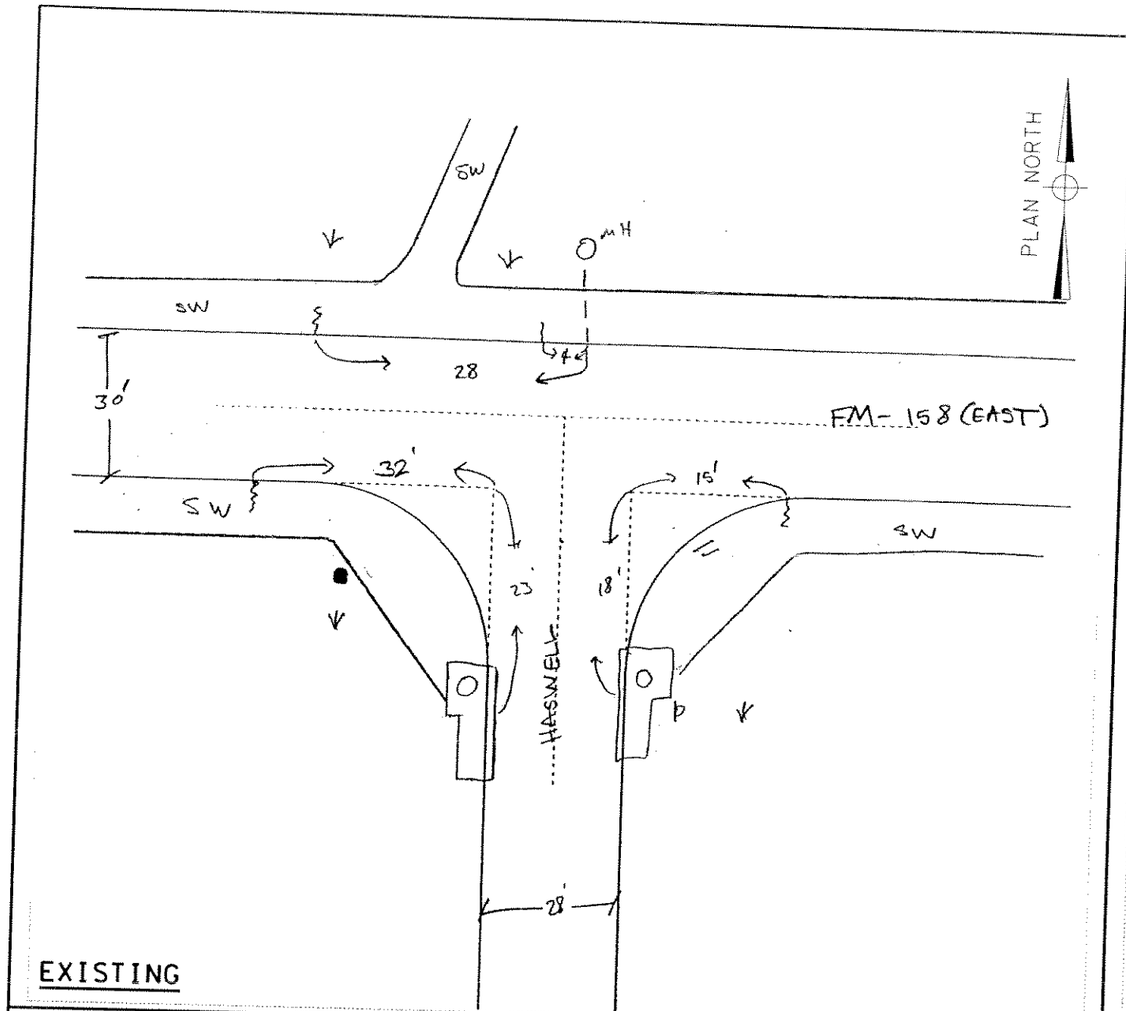

EXISTING

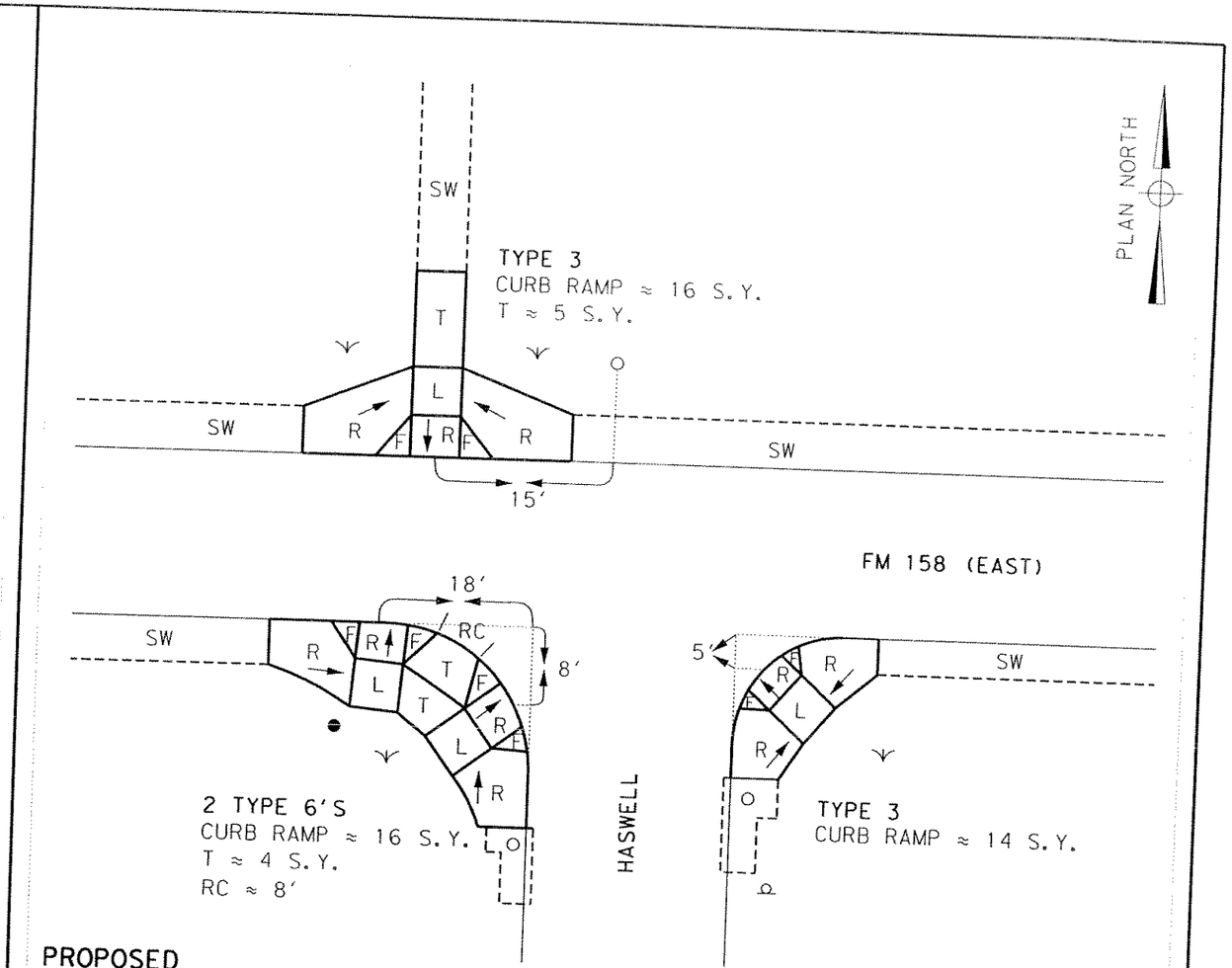

PROPOSED

LEGEND

- PP = POWER POLE
- GA = GUY ANCHOR
- TP = EX. TRAF. SIGNAL POLE
- PB = PED BUTTON
- (P) = NEW PED POLE W/ PED BUTTON
- GB = GROUND BOX
- EL = ELECTRICAL PEDESTAL/BOX
- LP = LIGHT POLE
- FH = FIRE HYDRANT
- WV = WATER VALVE
- MH = MANHOLE
- IN = INLET
- TR = TREE
- SH = SHRUB; = GRASS
- SN = SIGN; = NEW CONDUIT
- CL = CONSTRUCTION LIMITS
- ER = EXIST RAMP; SW = SIDEWALK
- L = LANDING; R = RAMP
- F = FLARE; T = TRANSITION
- RC = REPLACE CURB/CURB & GUTTER

ITEM DESCRIPTION	UNIT	QUANT.
RETROFIT DETECTABLE WARNING SURFACE	EA	
REPLACE CONC CURB	LF	8
CONC SIDEWALKS (6")	SY	9
REMOVING CONC (CURB & GUTTER)	LF	8
ELEC CONDR BARE	LF	
CONDT (PVC)	LF	
TRF SIG CBL	LF	
PED DETECT (2 INCH PUSH BTN)	EA	
REMOVAL OF PEDESTRIAN PUSH BUTTONS	EA	
PED POLE ASSEMBLY	EA	
RELOC SM RD SN&AM(TY 10 BWG)	EA	
REF PAV MRK TY 1(W)12"(SLD)	LF	
REF PAV MRK TY 1(W)24"(SLD)	LF	
ELIM EXT PAV MRK & MRKS 12"	LF	
ELIM EXT PAV MRK & MRKS 24"	LF	

ITEM DESCRIPTION	UNIT	QUANT.
CURB RAMPS (TY 1) *	EA	
CURB RAMPS (TY 2) *	EA	
CURB RAMPS (TY 3) *	EA	2
CURB RAMPS (TY 4) *	EA	
CURB RAMPS (TY 5) *	EA	
CURB RAMPS (TY 6) *	EA	2
CURB RAMPS (TY 7) *	EA	
CURB RAMPS (TY 9) *	EA	
CURB RAMPS (TY 10) *	EA	
CURB RAMPS (TY 20) *	EA	
CURB RAMPS (TY 21) *	EA	
CURB RAMPS (TY 22) *	EA	
CURB RAMPS	SY	46
ADJ MANHS	EA	
REPLACE GROUND BOX	EA	
RAIL (HANDRAIL)	LF	
DRIVEWAYS (CONC)	SY	
ADJUST METER BOX TO GRADE	EA	

ITEM DESCRIPTION	UNIT	QUANT.
COMPOST MANUF TOPSOIL	SY	9
EXCAVATION (SPECIAL)	CY	
BLOCK SODDING	SY	9

* = FOR CONTRACTOR'S INFORMATION "ONLY" NON-PAY ITEM

STATE OF TEXAS
SCOTT E DUKETTE
83615
LICENSED
PROFESSIONAL ENGINEER
12/6/07

N. T. S.

Texas Department of Transportation
©2007

H.R.Gray For Construction Success

klotz associates

ADA CURB RAMP PROGRAM
BRYAN, TEXAS
FM 158 (EAST) AT
HASWELL

DN: AJS	FED. RD. DIV. NO.	STATE	STATE PROJECT NO.		HIGHWAY NO.
CK DN: SAS	6	TEXAS			VARIES
DW: DWC	STATE DIST.	COUNTY	CONTROL NO.	SECTION NO.	JOB NO. / SHEET NO.
CK DW: MS/SD	BRY	WALKER, ETC.	0917	27	035, ETC / 119
TR:					
CK TR:					

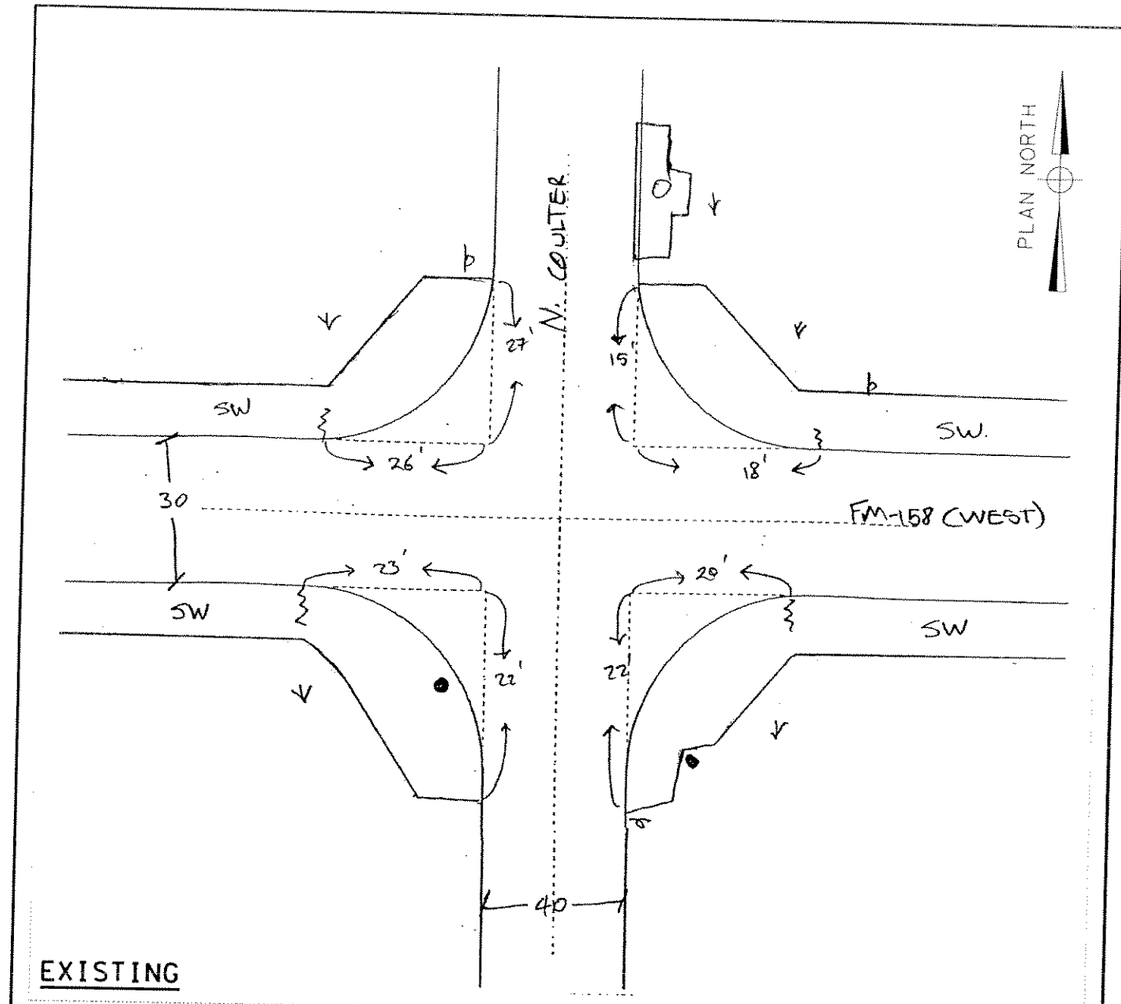

EXISTING

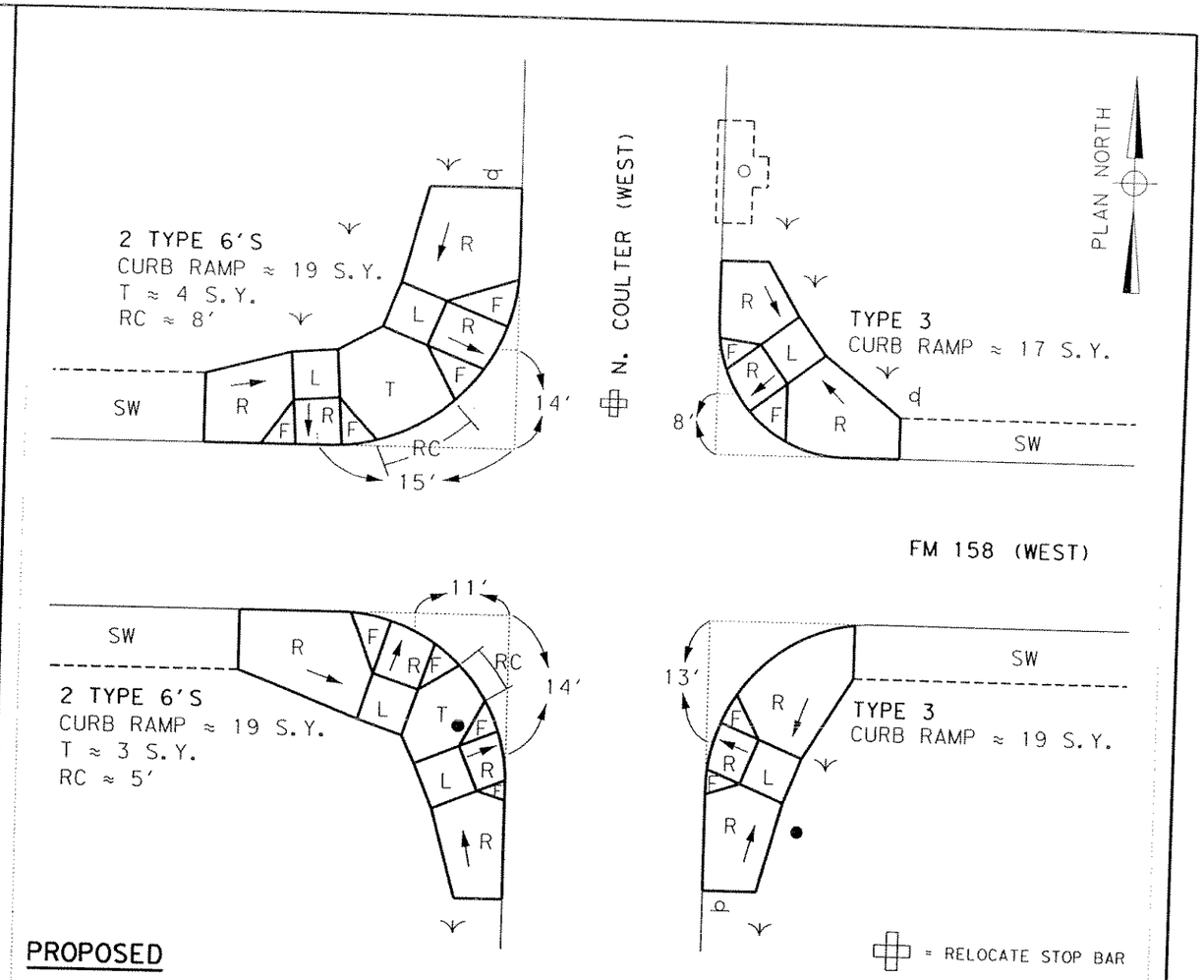

PROPOSED

LEGEND

- ● PP = POWER POLE
- GA = GUY ANCHOR
- TP = EX. TRAF. SIGNAL POLE
- PB = PED BUTTON
- Ⓟ = NEW PED POLE W/ PED BUTTON
- GB = GROUND BOX
- EL = ELECTRICAL PEDESTAL/BOX
- LP = LIGHT POLE
- FH = FIRE HYDRANT
- WV = WATER VALVE
- MH = MANHOLE
- IN = INLET
- TR = TREE
- SH = SHRUB; = GRASS
- SN = SIGN; = NEW CONDUIT
- CL = CONSTRUCTION LIMITS
- ER = EXIST RAMP; SW = SIDEWALK
- L = LANDING; R = RAMP
- F = FLARE; T = TRANSITION
- RC = REPLACE CURB/CURB & GUTTER

ITEM DESCRIPTION	UNIT	QUANT.
RETROFIT DETECTABLE WARNING SURFACE	EA	
REPLACE CONC CURB	LF	13
CONC SIDEWALKS (6")	SY	7
REMOVING CONC (CURB & GUTTER)	LF	13
ELEC CONDR BARE	LF	
CONDT (PVC)	LF	
TRF SIG CBL	LF	
PED DETECT (2 INCH PUSH BTN)	EA	
REMOVAL OF PEDESTRIAN PUSH BUTTONS	EA	
PED POLE ASSEMBLY	EA	
RELOC SM RD SN&AM(TY 10 BWG)	EA	
REF PAV MRK TY 1(W)12"(SLD)	LF	
REF PAV MRK TY 1(W)24"(SLD)	LF	20
ELIM EXT PAV MRK & MRKS 12"	LF	
ELIM EXT PAV MRK & MRKS 24"	LF	20

ITEM DESCRIPTION	UNIT	QUANT.
CURB RAMPS (TY 1) *	EA	
CURB RAMPS (TY 2) *	EA	
CURB RAMPS (TY 3) *	EA	2
CURB RAMPS (TY 4) *	EA	
CURB RAMPS (TY 5) *	EA	
CURB RAMPS (TY 6) *	EA	4
CURB RAMPS (TY 7) *	EA	
CURB RAMPS (TY 9) *	EA	
CURB RAMPS (TY 10) *	EA	
CURB RAMPS (TY 20) *	EA	
CURB RAMPS (TY 21) *	EA	
CURB RAMPS (TY 22) *	EA	
CURB RAMPS	SY	74
ADJ MANHS	EA	
REPLACE GROUND BOX	EA	
RAIL (HANDRAIL)	LF	
DRIVEWAYS (CONC)	SY	
ADJUST METER BOX TO GRADE	EA	

ITEM DESCRIPTION	UNIT	QUANT.
COMPOST MANUF TOPSOIL	SY	14
EXCAVATION (SPECIAL)	CY	
BLOCK SODDING	SY	14

* = FOR CONTRACTOR'S INFORMATION "ONLY" NON-PAY ITEM

STATE OF TEXAS
SCOTT E DUKETTE
83615
LICENSED
PROFESSIONAL ENGINEER
12/8/07

N. T. S.

Texas Department of Transportation
©2007

H.R.Gray For Construction Success

klotz associates

ADA CURB RAMP PROGRAM
BRYAN, TEXAS
FM 158 (WEST) AT
N. COULTER (WEST)

DN: AJS					
CK DN: SAS	FED. RD. DIV. NO.	STATE	STATE PROJECT NO.		HIGHWAY NO.
DW: CWG	6	TEXAS			VARIES
CK DW: MS/SD	STATE DIST.	COUNTY	CONTROL NO.	SECTION NO.	JOB NO. / SHEET NO.
TR:	BRY	WALKER, ETC.	0917	27	035, ETC. / 120
CK TR:					

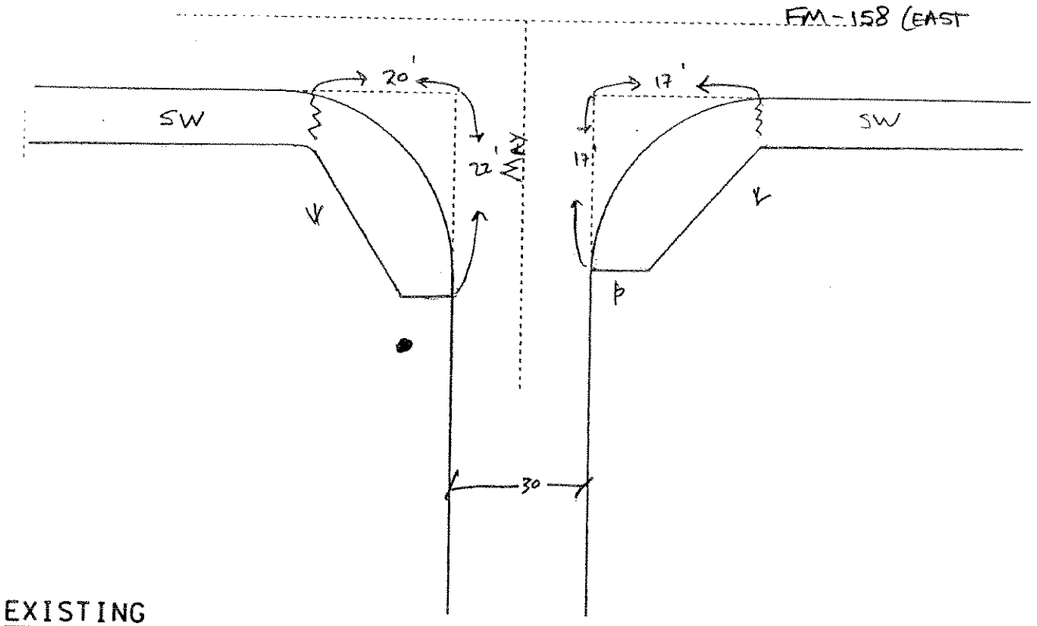

EXISTING

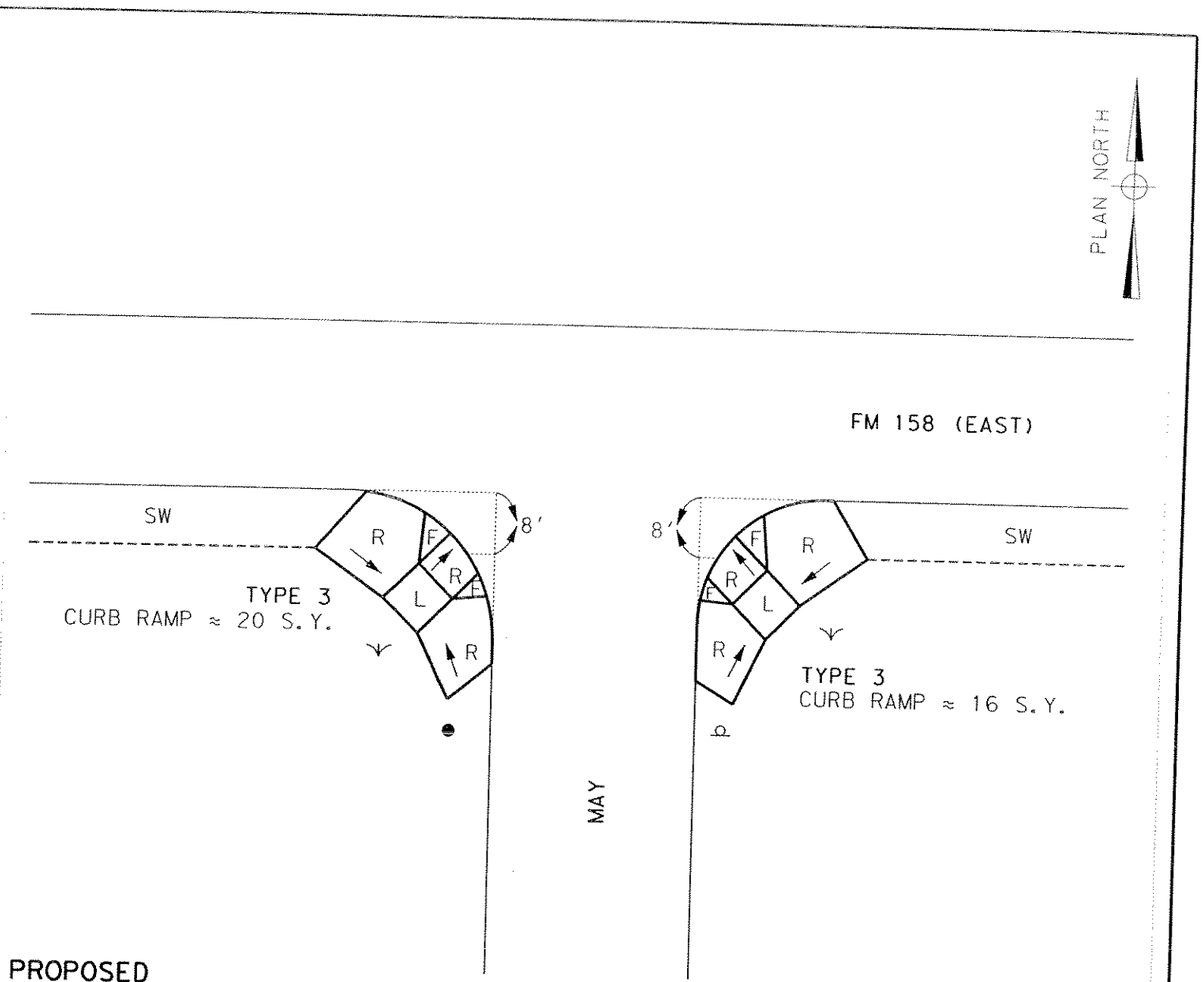

PROPOSED

LEGEND

- ● PP = POWER POLE
- GA = GUY ANCHOR
- ⊙ TP = EX. TRAF. SIGNAL POLE
- PB = PED BUTTON
- Ⓟ = NEW PED POLE W/ PED BUTTON
- ⊠ GB = GROUND BOX
- EL = ELECTRICAL PEDESTAL/BOX
- LP = LIGHT POLE
- FH = FIRE HYDRANT
- WV = WATER VALVE
- MH = MANHOLE
- IN = INLET
- TR = TREE
- SH = SHRUB; = GRASS
- SN = SIGN; ····· = NEW CONDUIT
- CL = CONSTRUCTION LIMITS
- ER = EXIST RAMP; SW = SIDEWALK
- L = LANDING; R = RAMP
- F = FLARE; T = TRANSITION
- RC = REPLACE CURB/CURB & GUTTER

ITEM DESCRIPTION	UNIT	QUANT.
RETROFIT DETECTABLE WARNING SURFACE	EA	
REPLACE CONC CURB	LF	
CONC SIDEWALKS (6")	SY	
REMOVING CONC (CURB & GUTTER)	LF	
ELEC CONDR BARE	LF	
CONDT (PVC)	LF	
TRF SIG CBL	LF	
PED DETECT (2 INCH PUSH BTN)	EA	
REMOVAL OF PEDESTRIAN PUSH BUTTONS	EA	
PED POLE ASSEMBLY	EA	
RELOC SM RD SN&AM(TY 10 BWG)	EA	
REF PAV MRK TY 1(W)12"(SLD)	LF	
REF PAV MRK TY 1(W)24"(SLD)	LF	
ELIM EXT PAV MRK & MRKS 12"	LF	
ELIM EXT PAV MRK & MRKS 24"	LF	

ITEM DESCRIPTION	UNIT	QUANT.
CURB RAMPS (TY 1) *	EA	
CURB RAMPS (TY 2) *	EA	
CURB RAMPS (TY 3) *	EA	2
CURB RAMPS (TY 4) *	EA	
CURB RAMPS (TY 5) *	EA	
CURB RAMPS (TY 6) *	EA	
CURB RAMPS (TY 7) *	EA	
CURB RAMPS (TY 9) *	EA	
CURB RAMPS (TY 10) *	EA	
CURB RAMPS (TY 20) *	EA	
CURB RAMPS (TY 21) *	EA	
CURB RAMPS (TY 22) *	EA	
CURB RAMPS	SY	36
ADJ MANHS	EA	
REPLACE GROUND BOX	EA	
RAIL (HANDRAIL)	LF	
DRIVEWAYS (CONC)	SY	
ADJUST METER BOX TO GRADE	EA	

ITEM DESCRIPTION	UNIT	QUANT.
COMPOST MANUF TOPSOIL	SY	7
EXCAVATION (SPECIAL)	CY	
BLOCK SODDING	SY	7

* = FOR CONTRACTOR'S INFORMATION "ONLY" NON-PAY ITEM

STATE OF TEXAS
SCOTT E. DUKETTE
83615
LICENSED
PROFESSIONAL ENGINEER
11/19/07

N. T. S.

Texas Department of Transportation
©2007

H.R.Gray For Construction Success

klotz associates

ADA CURB RAMP PROGRAM
BRYAN, TEXAS
FM 158 (EAST) AT
MAY

DN: AJS	FED. RD. DIV. NO.	STATE	STATE PROJECT NO.			HIGHWAY NO.
CK DN: SAS	6	TEXAS				VARIES
DW: GWG						
CK DW: MS/SD	STATE DIST.	COUNTY	CONTROL NO.	SECTION NO.	JOB NO.	SHEET NO.
TR:	BRY	WALKER, ETC.	0917	27	035, ETC.	121
CK TR:						

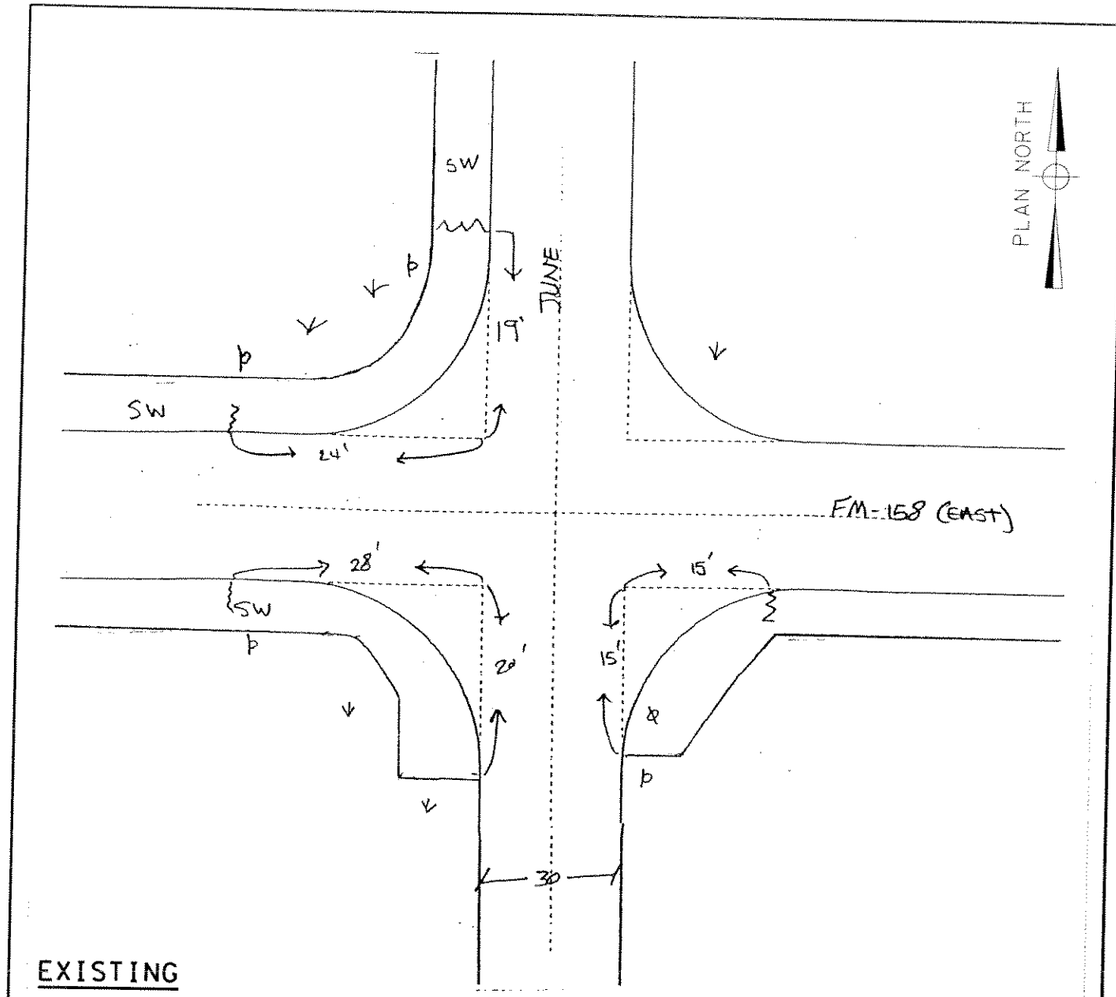

EXISTING

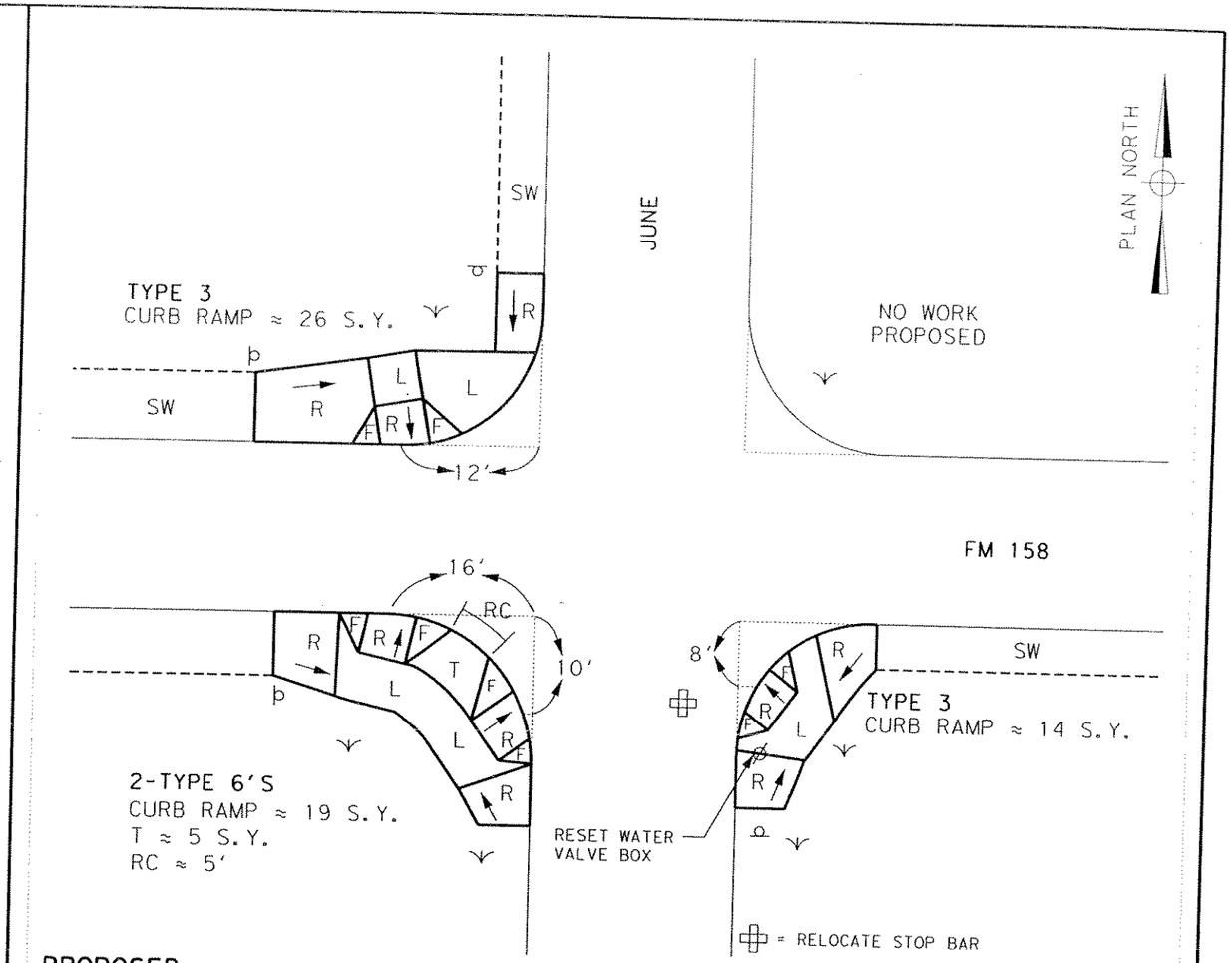

PROPOSED

LEGEND

- PP = POWER POLE
- GA = GUY ANCHOR
- TP = EX. TRAF. SIGNAL POLE
- PB = PED BUTTON
- (P) = NEW PED POLE W/ PED BUTTON
- GB = GROUND BOX
- EL = ELECTRICAL PEDESTAL/BOX
- LP = LIGHT POLE
- FH = FIRE HYDRANT
- WV = WATER VALVE
- MH = MANHOLE
- IN = INLET
- TR = TREE
- SH = SHRUB; = GRASS
- SN = SIGN; = NEW CONDUIT
- CL = CONSTRUCTION LIMITS
- ER = EXIST RAMP; SW = SIDEWALK
- L = LANDING; R = RAMP
- F = FLARE; T = TRANSITION
- RC = REPLACE CURB/CURB & GUTTER

ITEM DESCRIPTION	UNIT	QUANT.
RETROFIT DETECTABLE WARNING SURFACE	EA	
REPLACE CONC CURB	LF	5
CONC SIDEWALKS (6")	SY	5
REMOVING CONC (CURB & GUTTER)	LF	5
ELEC CONDR BARE	LF	
CONDT (PVC)	LF	
TRF SIG CBL	LF	
PED DETECT (2 INCH PUSH BTN)	EA	
REMOVAL OF PEDESTRIAN PUSH BUTTONS	EA	
PED POLE ASSEMBLY	EA	
RELOC SM RD SN&AM(TY 10 BWG)	EA	
REF PAV MRK TY 1(W)12"(SLD)	LF	
REF PAV MRK TY 1(W)24"(SLD)	LF	15
ELIM EXT PAV MRK & MRKS 12"	LF	
ELIM EXT PAV MRK & MRKS 24"	LF	15

ITEM DESCRIPTION	UNIT	QUANT.
CURB RAMPS (TY 1) *	EA	
CURB RAMPS (TY 2) *	EA	
CURB RAMPS (TY 3) *	EA	2
CURB RAMPS (TY 4) *	EA	
CURB RAMPS (TY 5) *	EA	
CURB RAMPS (TY 6) *	EA	2
CURB RAMPS (TY 7) *	EA	
CURB RAMPS (TY 9) *	EA	
CURB RAMPS (TY 10) *	EA	
CURB RAMPS (TY 20) *	EA	
CURB RAMPS (TY 21) *	EA	
CURB RAMPS (TY 22) *	EA	
CURB RAMPS	SY	59
ADJ MANHS	EA	
REPLACE GROUND BOX	EA	
RAIL (HANDRAIL)	LF	
DRIVEWAYS (CONC)	SY	
ADJUST METER BOX TO GRADE	EA	

ITEM DESCRIPTION	UNIT	QUANT.
COMPOST MANUF TOPSOIL	SY	9
EXCAVATION (SPECIAL)	CY	
BLOCK SODDING	SY	9

* = FOR CONTRACTOR'S INFORMATION "ONLY" NON-PAY ITEM

STATE OF TEXAS
SCOTT E DUKETTE
83615
LICENSED
PROFESSIONAL ENGINEER
12/6/07

N. T. S.

Texas Department of Transportation
©2007

H.R.Gray For Construction Success

klotz associates

ADA CURB RAMP PROGRAM

BRYAN, TEXAS

FM 158 (EAST) AT

JUNE

DN: AJS	FED. RD. DIV. NO.	STATE	STATE PROJECT NO.		HIGHWAY NO.
CK DN: SAS	6	TEXAS			VARIES
DN: CWG	STATE DIST.	COUNTY	CONTROL NO.	SECTION NO.	JOB NO. / SHEET NO.
CK DN: MSFSD	BRY	WALKER, ETC.	0917	27	035, ETC. / 122
CK TR:					

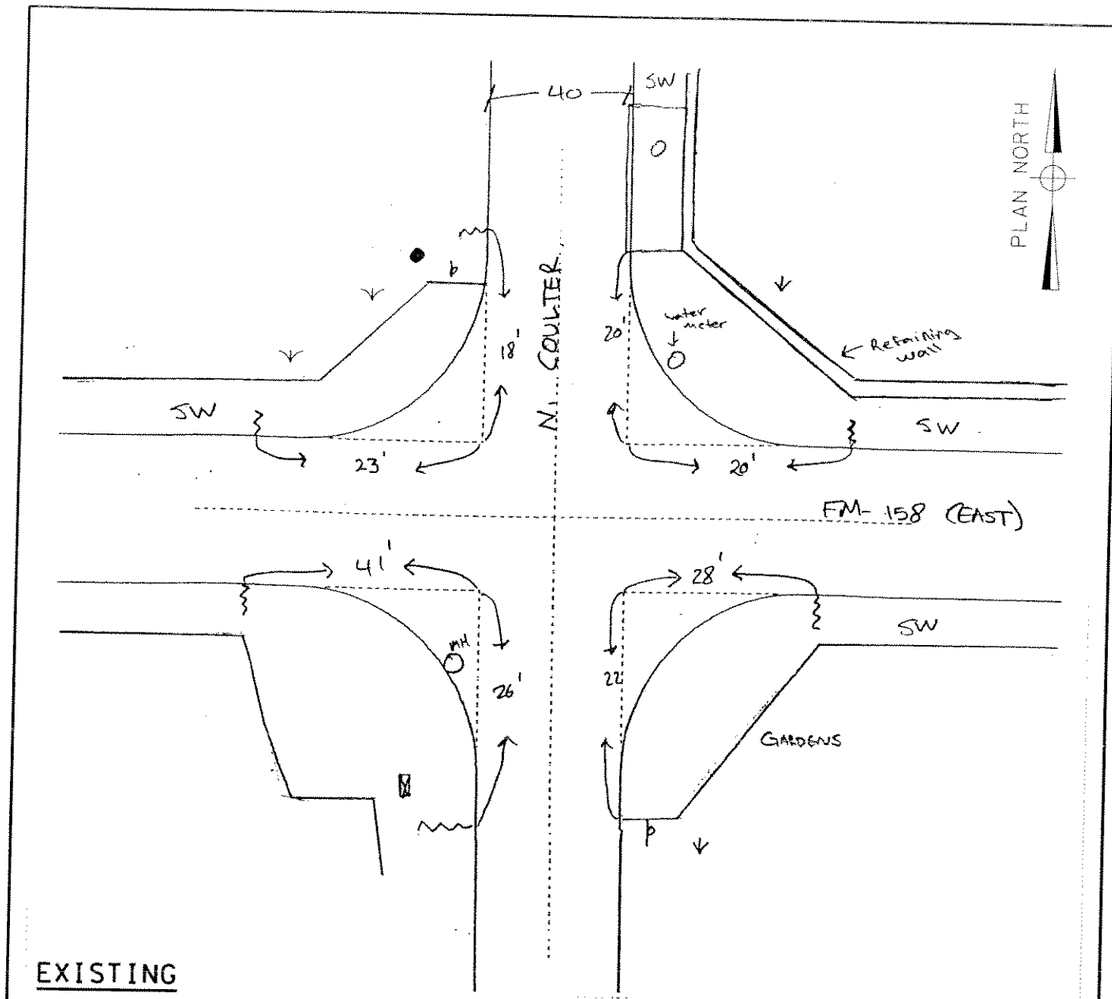

EXISTING

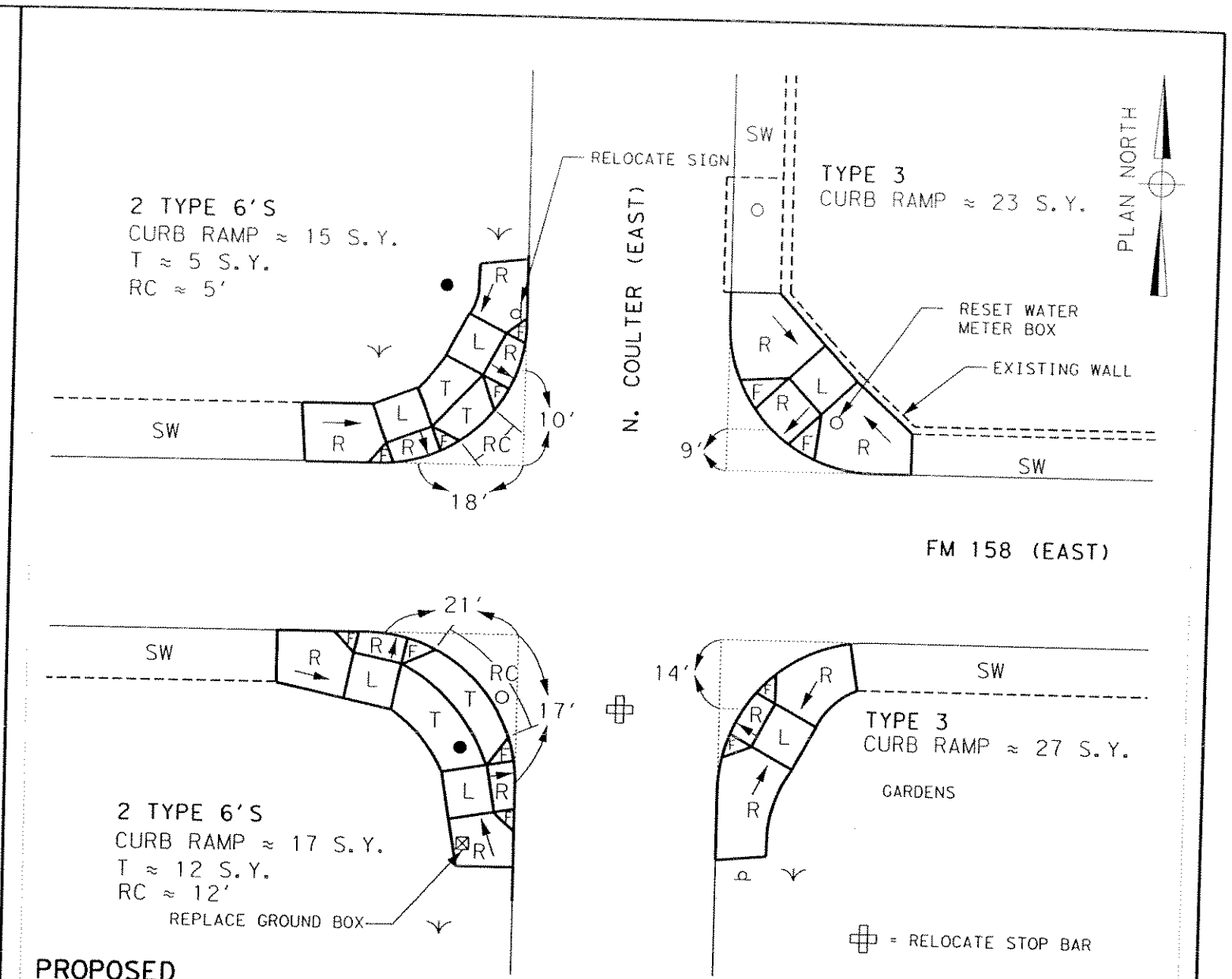

PROPOSED

LEGEND

- ● PP = POWER POLE
- GA = GUY ANCHOR
- TP = EX. TRAF. SIGNAL POLE
- PB = PED BUTTON
- Ⓟ = NEW PED POLE W/ PED BUTTON
- GB = GROUND BOX
- EL = ELECTRICAL PEDESTAL/BOX
- LP = LIGHT POLE
- FH = FIRE HYDRANT
- WV = WATER VALVE
- MH = MANHOLE
- IN = INLET
- TR = TREE
- SH = SHRUB; = GRASS
- SN = SIGN; = NEW CONDUIT
- CL = CONSTRUCTION LIMITS
- ER = EXIST RAMP; SW = SIDEWALK
- L = LANDING; R = RAMP
- F = FLARE; T = TRANSITION
- RC = REPLACE CURB/CURB & GUTTER

ITEM DESCRIPTION	UNIT	QUANT.
RETROFIT DETECTABLE WARNING SURFACE	EA	
REPLACE CONC CURB	LF	17
CONC SIDEWALKS (6")	SY	17
REMOVING CONC (CURB & GUTTER)	LF	17
ELEC CONDR BARE	LF	
CONDT (PVC)	LF	
TRF SIG CBL	LF	
PED DETECT (2 INCH PUSH BTN)	EA	
REMOVAL OF PEDESTRIAN PUSH BUTTONS	EA	
PED POLE ASSEMBLY	EA	
RELOC SM RD SN&AM(TY 10 BWG)	EA	1
REF PAV MRK TY 1(W)12"(SLD)	LF	
REF PAV MRK TY 1(W)24"(SLD)	LF	20
ELIM EXT PAV MRK & MRKS 12"	LF	
ELIM EXT PAV MRK & MRKS 24"	LF	20

ITEM DESCRIPTION	UNIT	QUANT.
CURB RAMPS (TY 1) *	EA	
CURB RAMPS (TY 2) *	EA	
CURB RAMPS (TY 3) *	EA	2
CURB RAMPS (TY 4) *	EA	
CURB RAMPS (TY 5) *	EA	
CURB RAMPS (TY 6) *	EA	4
CURB RAMPS (TY 7) *	EA	
CURB RAMPS (TY 9) *	EA	
CURB RAMPS (TY 10) *	EA	
CURB RAMPS (TY 20) *	EA	
CURB RAMPS (TY 21) *	EA	
CURB RAMPS (TY 22) *	EA	
CURB RAMPS	SY	82
ADJ MANHS	EA	
REPLACE GROUND BOX	EA	1
RAIL (HANDRAIL)	LF	
DRIVEWAYS (CONC)	SY	
ADJUST METER BOX TO GRADE	EA	

ITEM DESCRIPTION	UNIT	QUANT.
COMPOST MANUF TOPSOIL	SY	3
EXCAVATION (SPECIAL)	CY	
BLOCK SODDING	SY	3

* = FOR CONTRACTOR'S INFORMATION "ONLY" NON-PAY ITEM

STATE OF TEXAS
SCOTT E DUKETTE
83615
LICENSED
PROFESSIONAL ENGINEER
12/6/07

N. T. S.

Texas Department of Transportation
©2007

H.R.Gray For Construction Success

klotz associates

ADA CURB RAMP PROGRAM
BRYAN, TEXAS
FM 158 (EAST) AT
N. COULTER (EAST)

DN: AJS	FED. RD. DIV. NO.	STATE	STATE PROJECT NO.		HIGHWAY NO.
CK. DN: SAS	6	TEXAS			VARIES
DW: CWG	STATE DIST.	COUNTY	CONTROL NO.	SECTION NO.	JOB NO. / SHEET NO.
CK. DW: MS/SD	BRY	WALKER, ETC.	0917	27	035, ETC. / 123
TR:					
CK. TR:					

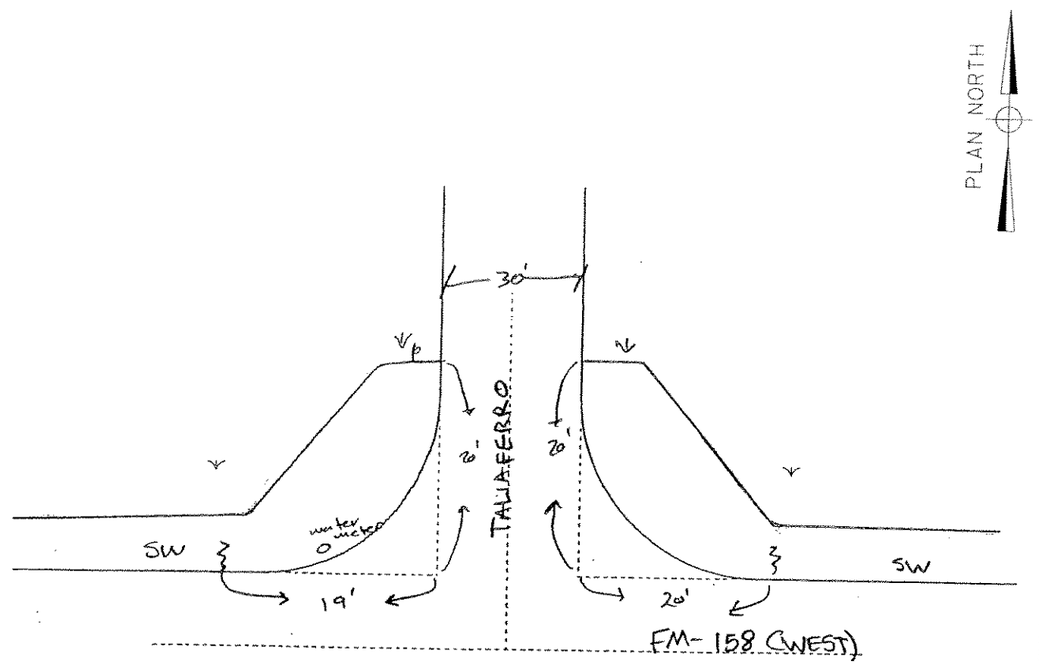

EXISTING

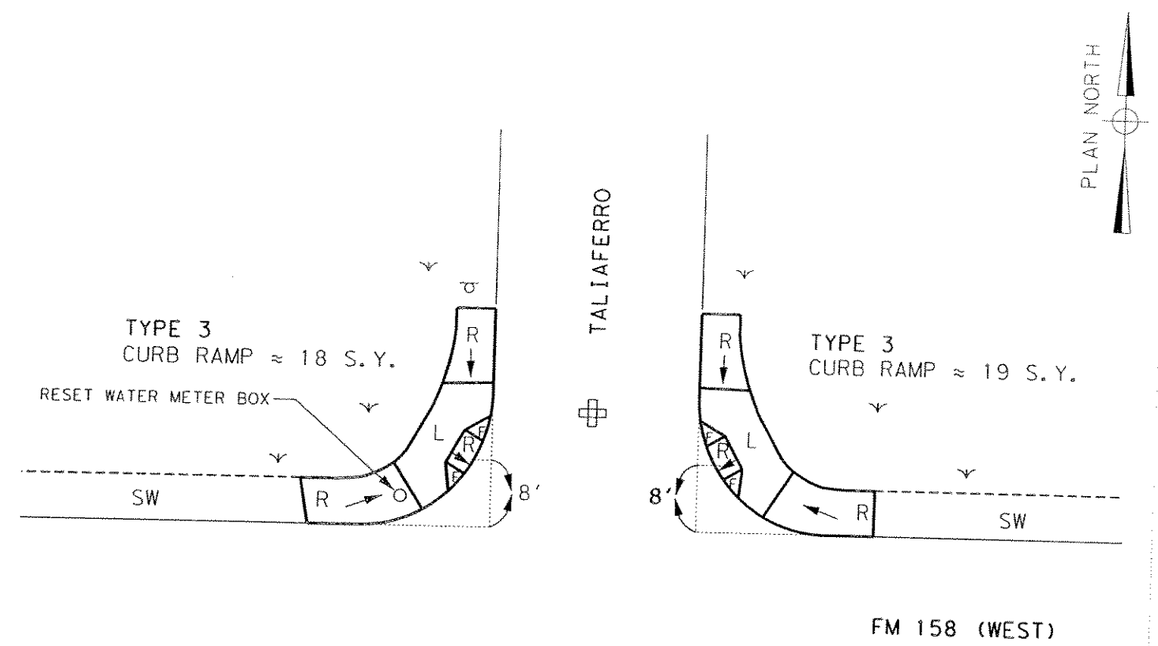

= RELOCATE STOP BAR

PROPOSED

LEGEND

- ● PP = POWER POLE
- GA = GUY ANCHOR
- TP = EX. TRAF. SIGNAL POLE
- PB = PED BUTTON
- Ⓟ = NEW PED POLE W/ PED BUTTON
- GB = GROUND BOX
- EL = ELECTRICAL PEDESTAL/BOX
- LP = LIGHT POLE
- FH = FIRE HYDRANT
- WV = WATER VALVE
- MH = MANHOLE
- IN = INLET
- TR = TREE
- SH = SHRUB; = GRASS
- SN = SIGN; = NEW CONDUIT
- CL = CONSTRUCTION LIMITS
- ER = EXIST RAMP; SW = SIDEWALK
- L = LANDING; R = RAMP
- F = FLARE; T = TRANSITION
- RC = REPLACE CURB/CURB & GUTTER

ITEM DESCRIPTION	UNIT	QUANT.
RETROFIT DETECTABLE WARNING SURFACE	EA	
REPLACE CONC CURB	LF	
CONC SIDEWALKS (6")	SY	
REMOVING CONC (CURB & GUTTER)	LF	
ELEC CONDR BARE	LF	
CONDT (PVC)	LF	
TRF SIG CBL	LF	
PED DETECT (2 INCH PUSH BTN)	EA	
REMOVAL OF PEDESTRIAN PUSH BUTTONS	EA	
PED POLE ASSEMBLY	EA	
RELOC SM RD SN&AM(TY 10 BWG)	EA	
REF PAV MRK TY 1(W)12"(SLD)	LF	
REF PAV MRK TY 1(W)24"(SLD)	LF	15
ELIM EXT PAV MRK & MRKS 12"	LF	
ELIM EXT PAV MRK & MRKS 24"	LF	15

ITEM DESCRIPTION	UNIT	QUANT.
CURB RAMPS (TY 1) *	EA	
CURB RAMPS (TY 2) *	EA	
CURB RAMPS (TY 3) *	EA	2
CURB RAMPS (TY 4) *	EA	
CURB RAMPS (TY 5) *	EA	
CURB RAMPS (TY 6) *	EA	
CURB RAMPS (TY 7) *	EA	
CURB RAMPS (TY 9) *	EA	
CURB RAMPS (TY 10) *	EA	
CURB RAMPS (TY 20) *	EA	
CURB RAMPS (TY 21) *	EA	
CURB RAMPS (TY 22) *	EA	
CURB RAMPS	SY	37
ADJ MANHS	EA	
REPLACE GROUND BOX	EA	
RAIL (HANDRAIL)	LF	
DRIVEWAYS (CONC)	SY	
ADJUST METER BOX TO GRADE	EA	

ITEM DESCRIPTION	UNIT	QUANT.
COMPOST MANUF TOPSOIL	SY	7
EXCAVATION (SPECIAL)	CY	
BLOCK SODDING	SY	7

* = FOR CONTRACTOR'S INFORMATION "ONLY" NON-PAY ITEM

STATE OF TEXAS
SCOTT E DUKETTE
83615
LICENSED PROFESSIONAL ENGINEER
11/19/07

N. T. S.

Texas Department of Transportation
©2007

H.R.Gray For Construction Success

klotz associates

ADA CURB RAMP PROGRAM
BRYAN, TEXAS
FM 158 (WEST) AT
TALIAFERRO

DN: AJS	FED. RD. DIV. NO.	STATE	STATE PROJECT NO.			HIGHWAY NO.
CK DN: SAS	6	TEXAS				VARIES
DN: GWC	STATE DIST.	COUNTY		CONTROL NO.	SECTION NO.	JOB NO. / SHEET NO.
CK DN: WS/SO	BRY	WALKER, ETC.		0917	27	035, ETC. / 124
TR:						
CK TR:						

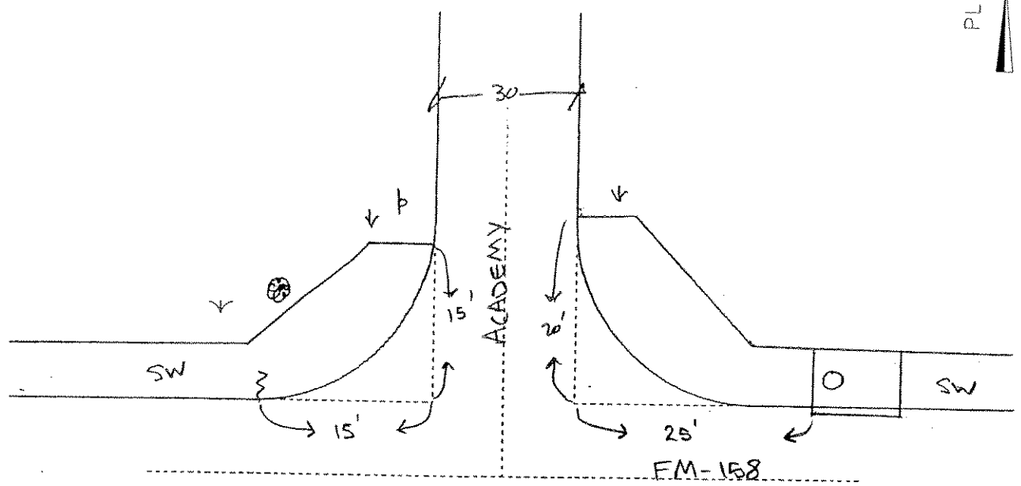

EXISTING

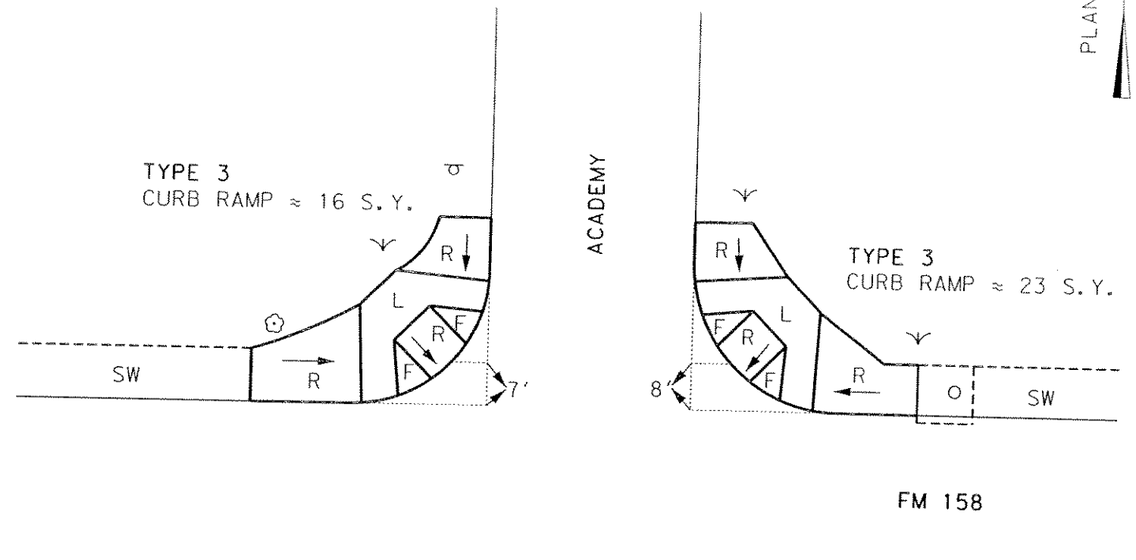

PROPOSED

LEGEND

- ● PP = POWER POLE
- GA = GUY ANCHOR
- TP = EX. TRAF. SIGNAL POLE
- PB = PED BUTTON
- Ⓟ = NEW PED POLE W/ PED BUTTON
- GB = GROUND BOX
- EL = ELECTRICAL PEDESTAL/BOX
- LP = LIGHT POLE
- FH = FIRE HYDRANT
- WV = WATER VALVE
- MH = MANHOLE
- IN = INLET
- TR = TREE
- SH = SHRUB; = GRASS
- SN = SIGN; ····· = NEW CONDUIT
- CL = CONSTRUCTION LIMITS
- ER = EXIST RAMP; SW = SIDEWALK
- L = LANDING; R = RAMP
- F = FLARE; T = TRANSITION
- RC = REPLACE CURB/CURB & GUTTER

ITEM DESCRIPTION	UNIT	QUANT.
RETROFIT DETECTABLE WARNING SURFACE	EA	
REPLACE CONC CURB	LF	
CONC SIDEWALKS (6")	SY	
REMOVING CONC (CURB & GUTTER)	LF	
ELEC CONDR BARE	LF	
CONDT (PVC)	LF	
TRF SIG CBL	LF	
PED DETECT (2 INCH PUSH BTN)	EA	
REMOVAL OF PEDESTRIAN PUSH BUTTONS	EA	
PED POLE ASSEMBLY	EA	
RELOC SM RD SN&AM(TY 10 BWG)	EA	
REF PAV MRK TY 1(W)12"(SLD)	LF	
REF PAV MRK TY 1(W)24"(SLD)	LF	
ELIM EXT PAV MRK & MRKS 12"	LF	
ELIM EXT PAV MRK & MRKS 24"	LF	

ITEM DESCRIPTION	UNIT	QUANT.
CURB RAMPS (TY 1) *	EA	
CURB RAMPS (TY 2) *	EA	
CURB RAMPS (TY 3) *	EA	2
CURB RAMPS (TY 4) *	EA	
CURB RAMPS (TY 5) *	EA	
CURB RAMPS (TY 6) *	EA	
CURB RAMPS (TY 7) *	EA	
CURB RAMPS (TY 9) *	EA	
CURB RAMPS (TY 10) *	EA	
CURB RAMPS (TY 20) *	EA	
CURB RAMPS (TY 21) *	EA	
CURB RAMPS (TY 22) *	EA	
CURB RAMPS	SY	39
ADJ MANHS	EA	
REPLACE GROUND BOX	EA	
RAIL (HANDRAIL)	LF	
DRIVEWAYS (CONC)	SY	
ADJUST METER BOX TO GRADE	EA	

ITEM DESCRIPTION	UNIT	QUANT.
COMPOST MANUF TOPSOIL	SY	7
EXCAVATION (SPECIAL)	CY	
BLOCK SODDING	SY	7

* = FOR CONTRACTOR'S INFORMATION "ONLY" NON-PAY ITEM

STATE OF TEXAS
SCOTT E DUKETTE
83615
LICENSED
PROFESSIONAL ENGINEER
11/19/07

N. T. S.

Texas Department of Transportation
©2007

H.R.Gray For Construction Success

klotz associates

ADA CURB RAMP PROGRAM
BRYAN, TEXAS
FM 158 AT
ACADEMY

DN: AJS	FED. RD. DIV. NO.	STATE	STATE PROJECT NO.			HIGHWAY NO.
CK DN: SAS	6	TEXAS				VARIES
DN: GMC	STATE DIST.	COUNTY	CONTROL NO.	SECTION NO.	JOB NO.	SHEET NO.
CK DN: MS/SD	BRY	WALKER, ETC.	0517	27	035, ETC.	125
TR:						
CK TR:						

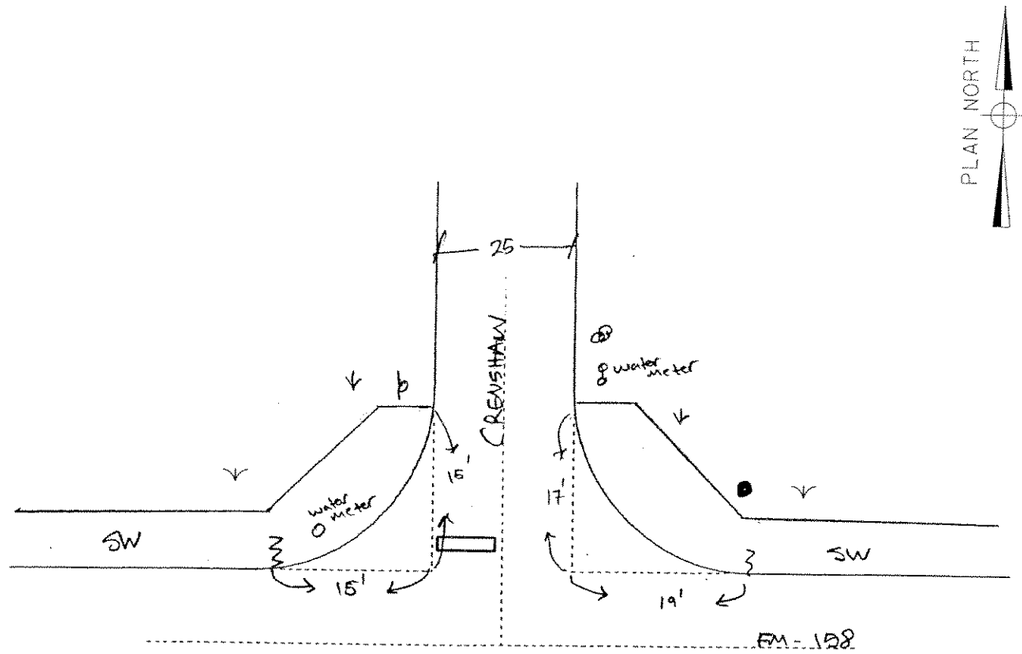

EXISTING

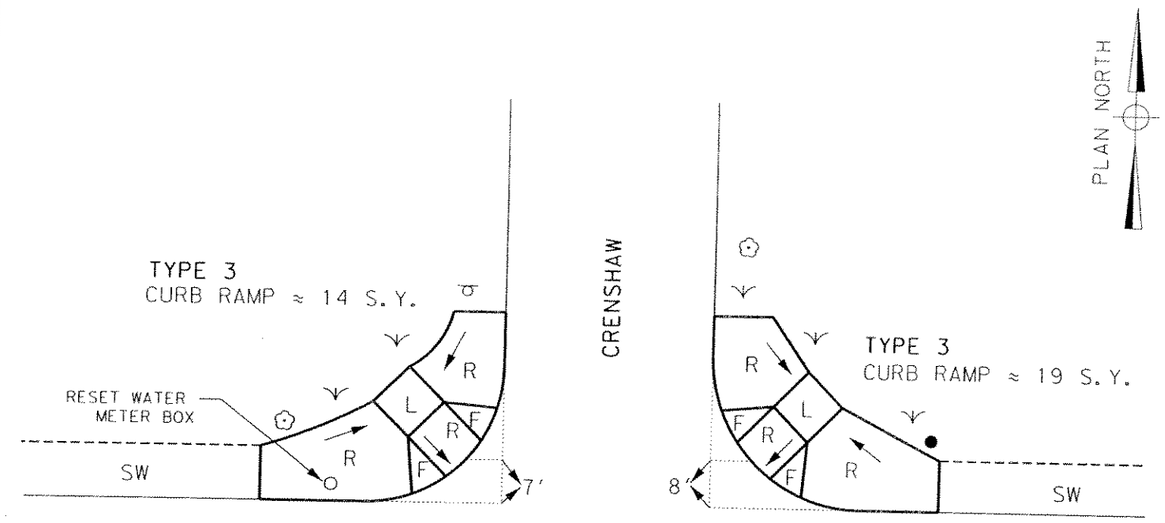

PROPOSED

⊕ = RELOCATE STOP BAR

LEGEND

- ● PP = POWER POLE
- GA = GUY ANCHOR
- TP = EX. TRAF. SIGNAL POLE
- PB = PED BUTTON
- Ⓟ = NEW PED POLE W/ PED BUTTON
- GB = GROUND BOX
- EL = ELECTRICAL PEDESTAL/BOX
- LP = LIGHT POLE
- FH = FIRE HYDRANT
- WV = WATER VALVE
- MH = MANHOLE
- IN = INLET
- TR = TREE
- SH = SHRUB; = GRASS
- SN = SIGN; = NEW CONDUIT
- CL = CONSTRUCTION LIMITS
- ER = EXIST RAMP; SW = SIDEWALK
- L = LANDING; R = RAMP
- F = FLARE; T = TRANSITION
- RC = REPLACE CURB/CURB & GUTTER

ITEM DESCRIPTION	UNIT	QUANT.
RETROFIT DETECTABLE WARNING SURFACE	EA	
REPLACE CONC CURB	LF	
CONC SIDEWALKS (6")	SY	
REMOVING CONC (CURB & GUTTER)	LF	
ELEC CONDR BARE	LF	
CONDT (PVC)	LF	
TRF SIG CBL	LF	
PED DETECT (2 INCH PUSH BTN)	EA	
REMOVAL OF PEDESTRIAN PUSH BUTTONS	EA	
PED POLE ASSEMBLY	EA	
RELOC SM RD SN&AM(TY 10 BWG)	EA	
REF PAV MRK TY 1(W)12"(SLD)	LF	
REF PAV MRK TY 1(W)24"(SLD)	LF	13
ELIM EXT PAV MRK & MRKS 12"	LF	
ELIM EXT PAV MRK & MRKS 24"	LF	13

ITEM DESCRIPTION	UNIT	QUANT.
CURB RAMPS (TY 1) *	EA	
CURB RAMPS (TY 2) *	EA	
CURB RAMPS (TY 3) *	EA	2
CURB RAMPS (TY 4) *	EA	
CURB RAMPS (TY 5) *	EA	
CURB RAMPS (TY 6) *	EA	
CURB RAMPS (TY 7) *	EA	
CURB RAMPS (TY 9) *	EA	
CURB RAMPS (TY 10) *	EA	
CURB RAMPS (TY 20) *	EA	
CURB RAMPS (TY 21) *	EA	
CURB RAMPS (TY 22) *	EA	
CURB RAMPS	SY	33
ADJ MANHS	EA	
REPLACE GROUND BOX	EA	
RAIL (HANDRAIL)	LF	
DRIVEWAYS (CONC)	SY	
ADJUST METER BOX TO GRADE	EA	

ITEM DESCRIPTION	UNIT	QUANT.
COMPOST MANUF TOPSOIL	SY	6
EXCAVATION (SPECIAL)	CY	
BLOCK SODDING	SY	6

* = FOR CONTRACTOR'S INFORMATION "ONLY" NON-PAY ITEM

STATE OF TEXAS
JAMES E. SCHWERDTFEGER
97266
LICENSED
PROFESSIONAL ENGINEER
5/10/07

N. T. S.

Texas Department of Transportation
©2007

H.R.Gray For Construction Success

klotz associates

ADA CURB RAMP PROGRAM
BRYAN, TEXAS
FM 158 AT
CRENSHAW

DN: AJS	FED. RD. DIV. NO.	STATE	STATE PROJECT NO.		HIGHWAY NO.
CK DN: SAS	6	TEXAS			VARIES
DW: CWC	STATE DIST.	COUNTY	CONTROL NO.	SECTION NO.	JOB NO. / SHEET NO.
CK DW: MS/SB	BRY	WALKER, ETC.	0917	27	035, ETC. / 126
TR:					
CK TR:					

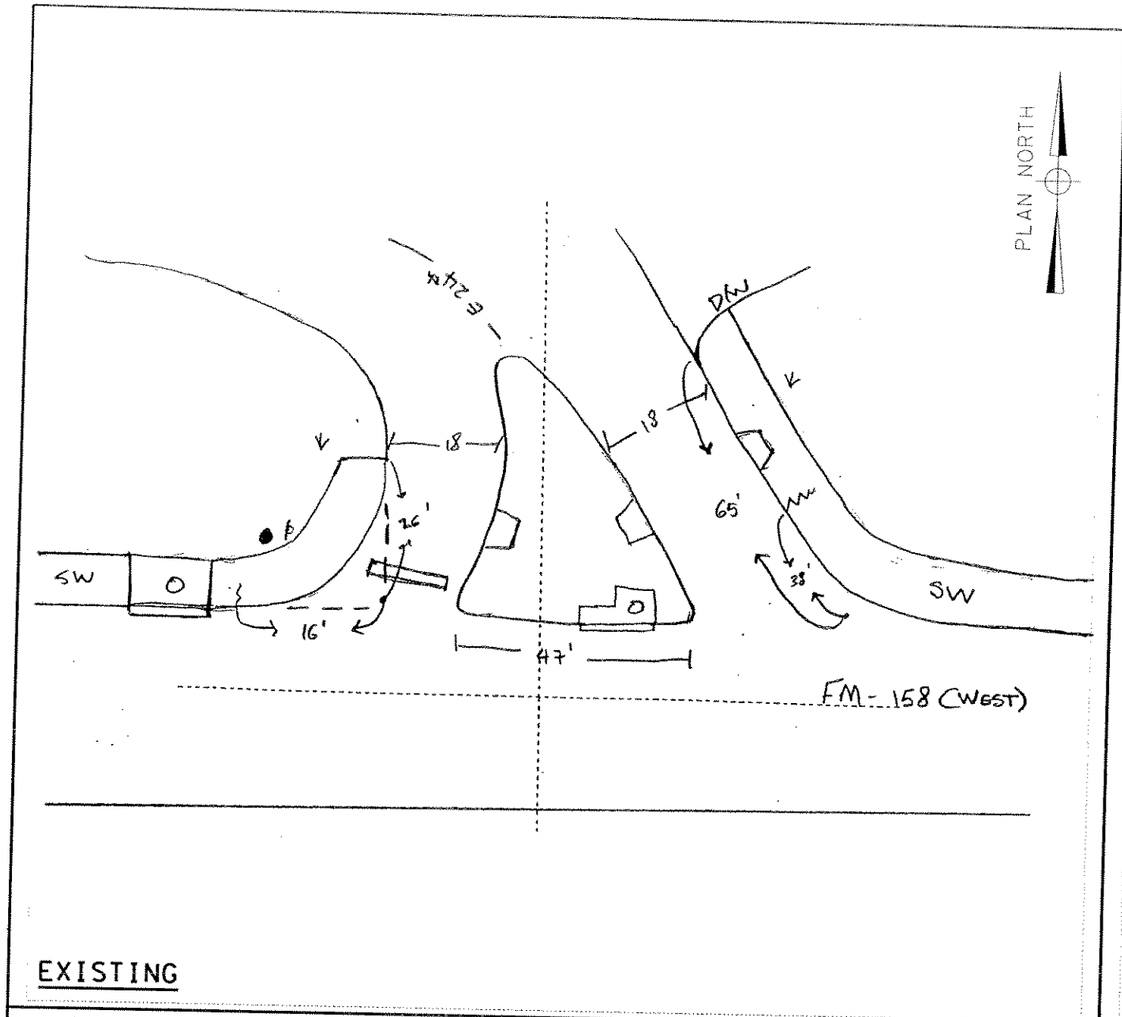

EXISTING

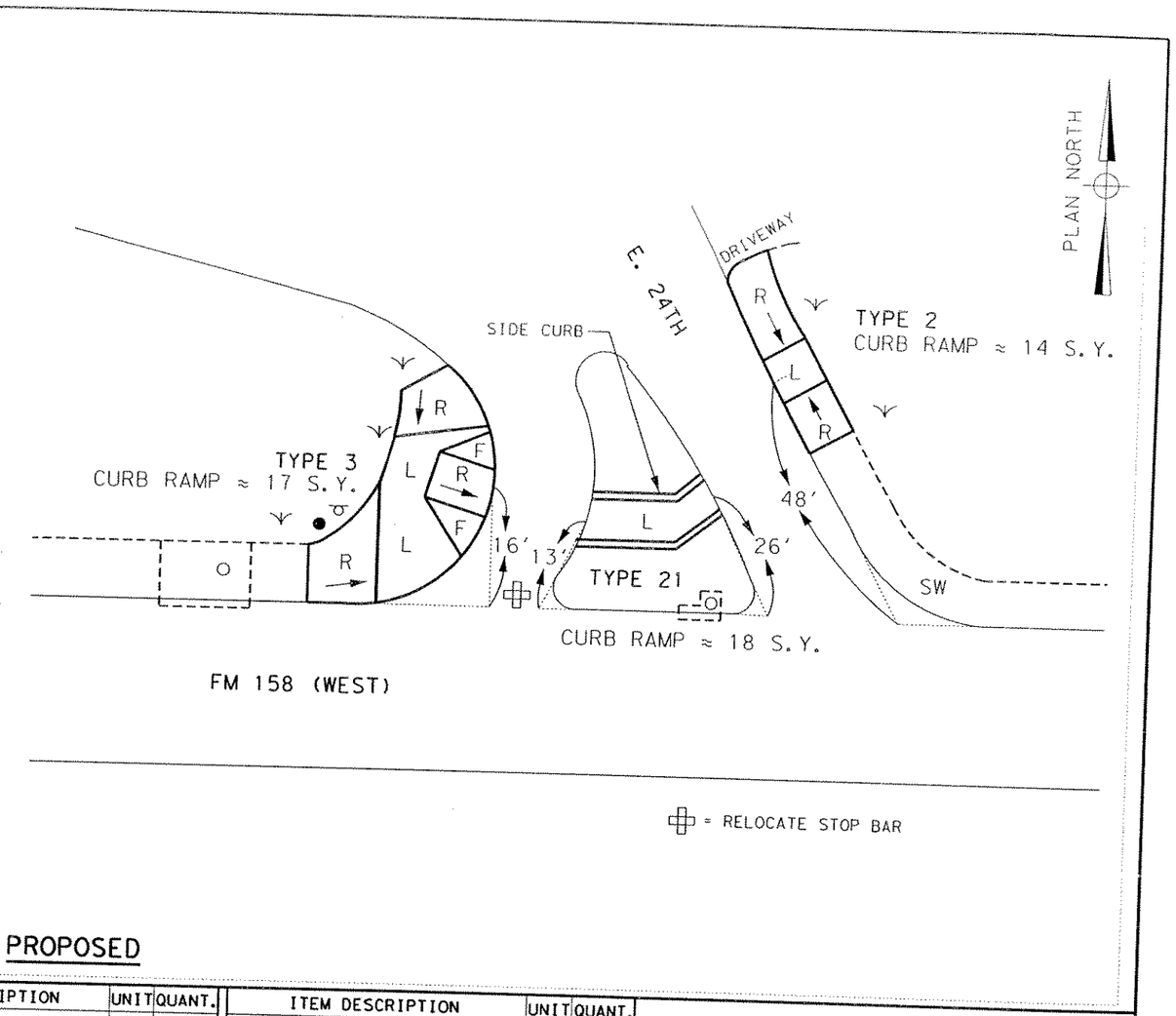

PROPOSED

LEGEND

- PP = POWER POLE
- GA = GUY ANCHOR
- TP = EX. TRAF. SIGNAL POLE
- PB = PED BUTTON
- (P) = NEW PED POLE W/ PED BUTTON
- GB = GROUND BOX
- EL = ELECTRICAL PEDESTAL/BOX
- LP = LIGHT POLE
- FH = FIRE HYDRANT
- WV = WATER VALVE
- MH = MANHOLE
- IN = INLET
- TR = TREE
- SH = SHRUB; = GRASS
- SN = SIGN; = NEW CONDUIT
- CL = CONSTRUCTION LIMITS
- ER = EXIST RAMP; SW = SIDEWALK
- L = LANDING; R = RAMP
- F = FLARE; T = TRANSITION
- RC = REPLACE CURB/CURB & GUTTER

ITEM DESCRIPTION	UNIT	QUANT.
RETROFIT DETECTABLE WARNING SURFACE	EA	
REPLACE CONC CURB	LF	
CONC SIDEWALKS (6")	SY	
REMOVING CONC (CURB & GUTTER)	LF	
ELEC CONDR BARE	LF	
CONDT (PVC)	LF	
TRF SIG CBL	LF	
PED DETECT (2 INCH PUSH BTN)	EA	
REMOVAL OF PEDESTRIAN PUSH BUTTONS	EA	
PED POLE ASSEMBLY	EA	
RELOC SM RD SN&AM(TY 10 BWG)	EA	
REF PAV MRK TY 1(W)12"(SLD)	LF	
REF PAV MRK TY 1(W)24"(SLD)	LF	18
ELIM EXT PAV MRK & MRKS 12"	LF	
ELIM EXT PAV MRK & MRKS 24"	LF	18

ITEM DESCRIPTION	UNIT	QUANT.
CURB RAMPS (TY 1) *	EA	
CURB RAMPS (TY 2) *	EA	1
CURB RAMPS (TY 3) *	EA	1
CURB RAMPS (TY 4) *	EA	
CURB RAMPS (TY 5) *	EA	
CURB RAMPS (TY 6) *	EA	
CURB RAMPS (TY 7) *	EA	
CURB RAMPS (TY 9) *	EA	
CURB RAMPS (TY 10) *	EA	
CURB RAMPS (TY 20) *	EA	
CURB RAMPS (TY 21) *	EA	1
CURB RAMPS (TY 22) *	EA	
CURB RAMPS	SY	49
ADJ MANHS	EA	
REPLACE GROUND BOX	EA	
RAIL (HANDRAIL)	LF	
DRIVEWAYS (CONC)	SY	
ADJUST METER BOX TO GRADE	EA	

ITEM DESCRIPTION	UNIT	QUANT.
COMPOST MANUF TOPSOIL	SY	7
EXCAVATION (SPECIAL)	CY	
BLOCK SODDING	SY	7

* = FOR CONTRACTOR'S INFORMATION "ONLY" NON-PAY ITEM

STATE OF TEXAS
SCOTT E DUKETTE
83615
LICENSED
PROFESSIONAL ENGINEER
11/19/07

N. T. S.

Texas Department of Transportation
©2007

H.R.Gray For Construction Success

klotz associates

ADA CURB RAMP PROGRAM
BRYAN, TEXAS
FM 158 (WEST) AT
E. 24TH

DN: KJS	FED. RD. DIV. NO.	STATE	STATE PROJECT NO.		HIGHWAY NO.	
CK. DN: SAS	6	TEXAS			VARIES	
DW: DWG	STATE DIST.	COUNTY		CONTROL NO.	SECTION NO.	JOB NO.	SHEET NO.
CK. DW: MS/SD	BRY	WALKER, ETC.		0917	27	035, ETC.	127
TR:							
CK. TR:							

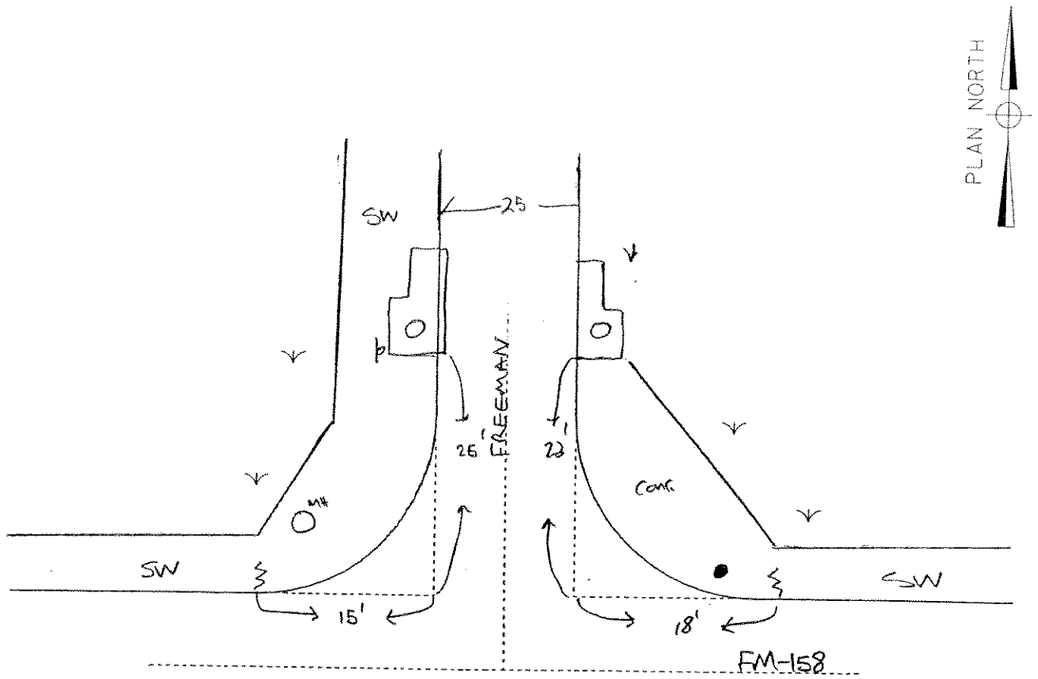

EXISTING

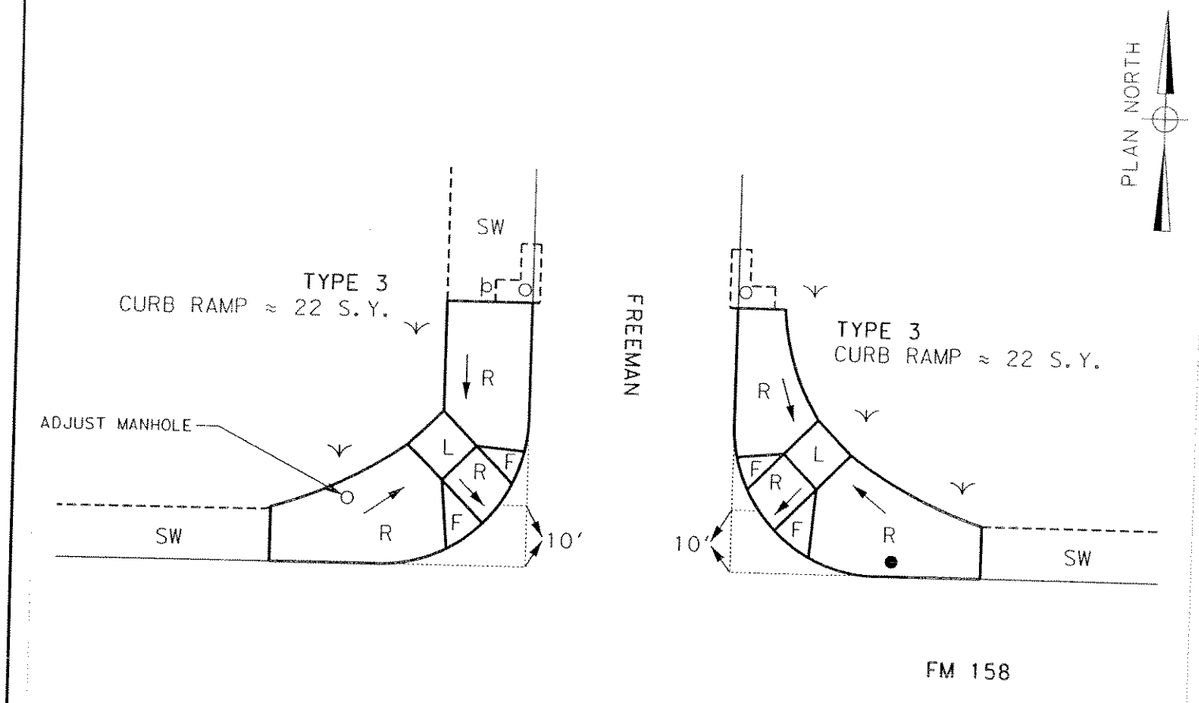

PROPOSED

LEGEND

- ● PP = POWER POLE
- GA = GUY ANCHOR
- TP = EX. TRAF. SIGNAL POLE
- PB = PED BUTTON
- Ⓟ = NEW PED POLE W/ PED BUTTON
- GB = GROUND BOX
- EL = ELECTRICAL PEDESTAL/BOX
- LP = LIGHT POLE
- FH = FIRE HYDRANT
- WV = WATER VALVE
- MH = MANHOLE
- IN = INLET
- TR = TREE
- SH = SHRUB; = GRASS
- SN = SIGN; = NEW CONDUIT
- CL = CONSTRUCTION LIMITS
- ER = EXIST RAMP; SW = SIDEWALK
- L = LANDING; R = RAMP
- F = FLARE; T = TRANSITION
- RC = REPLACE CURB/CURB & GUTTER

ITEM DESCRIPTION	UNIT	QUANT.
RETROFIT DETECTABLE WARNING SURFACE	EA	
REPLACE CONC CURB	LF	
CONC SIDEWALKS (6")	SY	
REMOVING CONC (CURB & GUTTER)	LF	
ELEC CONDR BARE	LF	
CONDT (PVC)	LF	
TRF SIG CBL	LF	
PED DETECT (2 INCH PUSH BTN)	EA	
REMOVAL OF PEDESTRIAN PUSH BUTTONS	EA	
PED POLE ASSEMBLY	EA	
RELOC SM RD SN&AM(TY 10 BWG)	EA	
REF PAV MRK TY 1(W)12"(SLD)	LF	
REF PAV MRK TY 1(W)24"(SLD)	LF	
ELIM EXT PAV MRK & MRKS 12"	LF	
ELIM EXT PAV MRK & MRKS 24"	LF	

ITEM DESCRIPTION	UNIT	QUANT.
CURB RAMPS (TY 1) *	EA	
CURB RAMPS (TY 2) *	EA	
CURB RAMPS (TY 3) *	EA	2
CURB RAMPS (TY 4) *	EA	
CURB RAMPS (TY 5) *	EA	
CURB RAMPS (TY 6) *	EA	
CURB RAMPS (TY 7) *	EA	
CURB RAMPS (TY 9) *	EA	
CURB RAMPS (TY 10) *	EA	
CURB RAMPS (TY 20) *	EA	
CURB RAMPS (TY 21) *	EA	
CURB RAMPS (TY 22) *	EA	
CURB RAMPS	SY	44
ADJ MANHS	EA	1
REPLACE GROUND BOX	EA	
RAIL (HANDRAIL)	LF	
DRIVEWAYS (CONC)	SY	
ADJUST METER BOX TO GRADE	EA	

ITEM DESCRIPTION	UNIT	QUANT.
COMPOST MANUF TOPSOIL	SY	6
EXCAVATION (SPECIAL)	CY	
BLOCK SODDING	SY	6

* = FOR CONTRACTOR'S INFORMATION "ONLY"
NON-PAY ITEM

STATE OF TEXAS
SCOTT E DUKETTE
83615
LICENSED
PROFESSIONAL ENGINEER
1/19/07

N. T. S.

Texas Department of Transportation
©2007

H.R.Gray For Construction Success

klotz associates

ADA CURB RAMP PROGRAM
BRYAN, TEXAS
FM 158 AT
FREEMAN

DN: AJS	FED. RD. DIV. NO.	STATE	STATE PROJECT NO.		HIGHWAY NO.
CK DN: SAS	6	TEXAS			VARIES
DW: CMC					
CK DW: MS/SD	STATE DIST.	COUNTY	CONTROL NO.	SECTION NO.	JOB NO. / SHEET NO.
TR:	BRY	WALKER, ETC.	0917	27	035, ETC. / 128
CK TR:					

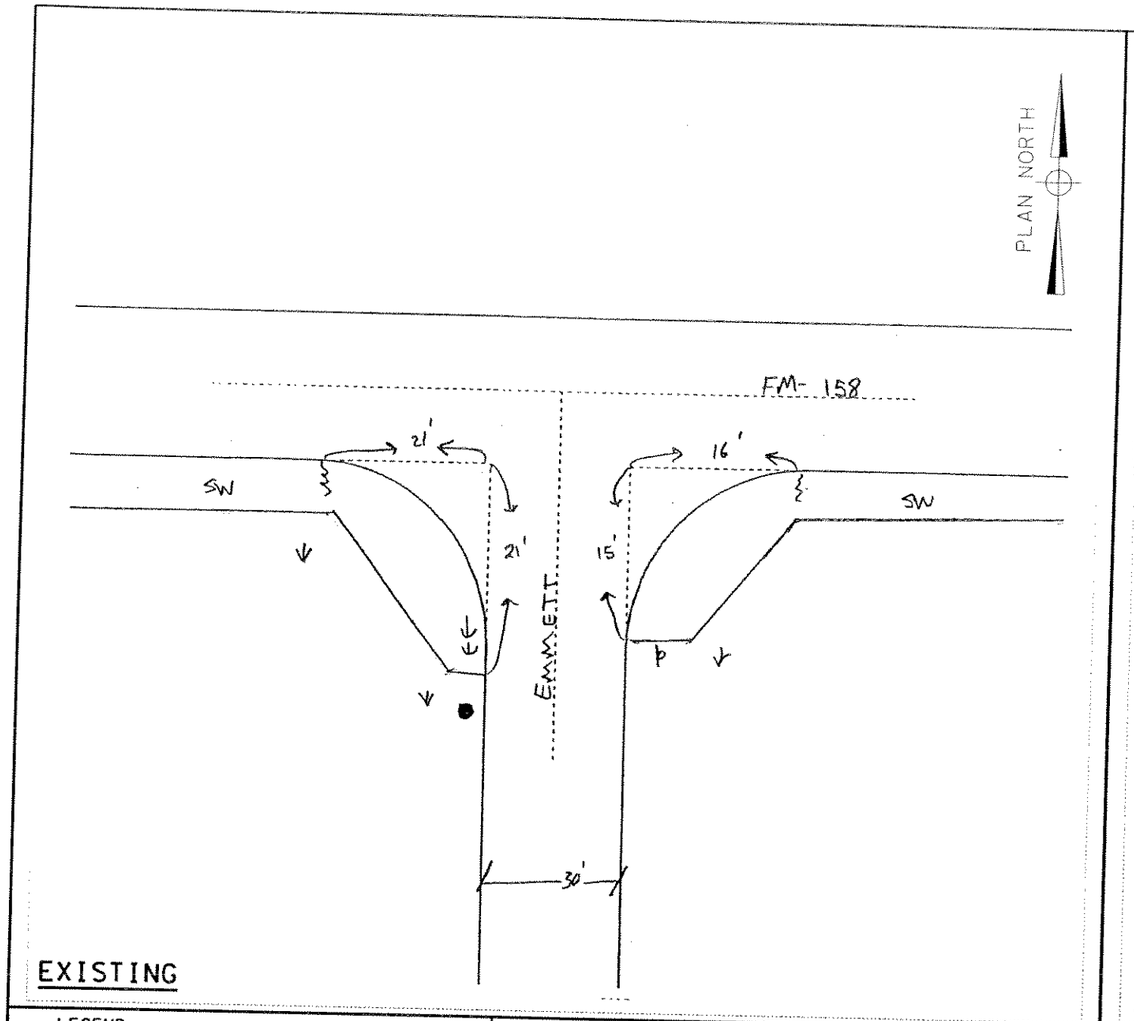

EXISTING

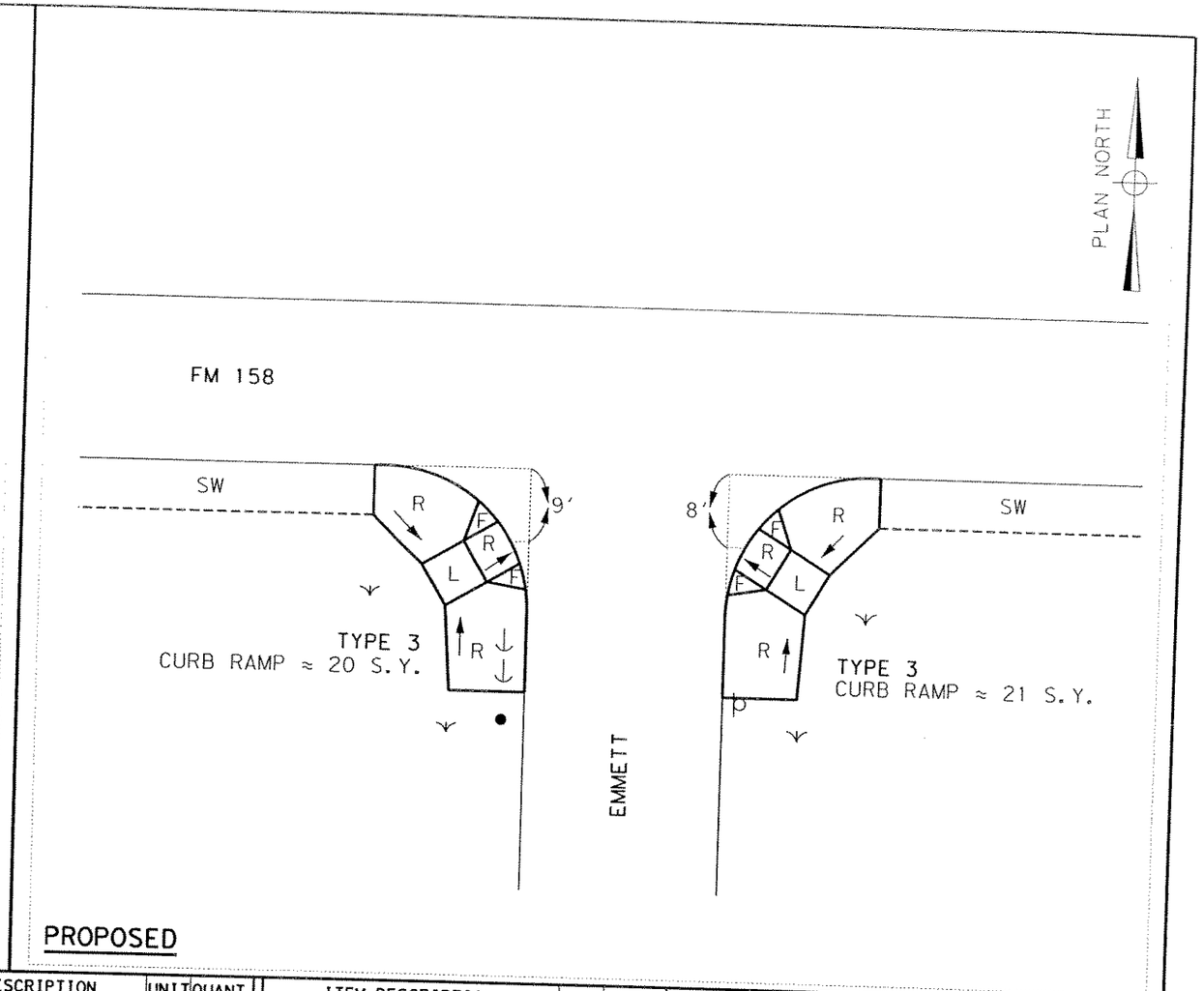

PROPOSED

LEGEND

- ● PP = POWER POLE
- GA = GUY ANCHOR
- TP = EX. TRAF. SIGNAL POLE
- PB = PED BUTTON
- Ⓟ = NEW PED POLE W/ PED BUTTON
- GB = GROUND BOX
- EL = ELECTRICAL PEDESTAL/BOX
- LP = LIGHT POLE
- FH = FIRE HYDRANT
- WV = WATER VALVE
- MH = MANHOLE
- IN = INLET
- TR = TREE
- SH = SHRUB; = GRASS
- SN = SIGN; = NEW CONDUIT
- CL = CONSTRUCTION LIMITS
- ER = EXIST RAMP; SW = SIDEWALK
- L = LANDING; R = RAMP
- F = FLARE; T = TRANSITION
- RC = REPLACE CURB/CURB & GUTTER

ITEM DESCRIPTION	UNIT	QUANT.
RETROFIT DETECTABLE WARNING SURFACE	EA	
REPLACE CONC CURB	LF	
CONC SIDEWALKS (6")	SY	
REMOVING CONC (CURB & GUTTER)	LF	
ELEC CONDR BARE	LF	
CONDT (PVC)	LF	
TRF SIG CBL	LF	
PED DETECT (2 INCH PUSH BTN)	EA	
REMOVAL OF PEDESTRIAN PUSH BUTTONS	EA	
PED POLE ASSEMBLY	EA	
RELOC SM RD SN&AM(TY 10 BWG)	EA	
REF PAV MRK TY 1(W)12"(SLD)	LF	
REF PAV MRK TY 1(W)24"(SLD)	LF	
ELIM EXT PAV MRK & MRKS 12"	LF	
ELIM EXT PAV MRK & MRKS 24"	LF	

ITEM DESCRIPTION	UNIT	QUANT.
CURB RAMPS (TY 1) *	EA	
CURB RAMPS (TY 2) *	EA	
CURB RAMPS (TY 3) *	EA	2
CURB RAMPS (TY 4) *	EA	
CURB RAMPS (TY 5) *	EA	
CURB RAMPS (TY 6) *	EA	
CURB RAMPS (TY 7) *	EA	
CURB RAMPS (TY 9) *	EA	
CURB RAMPS (TY 10) *	EA	
CURB RAMPS (TY 20) *	EA	
CURB RAMPS (TY 21) *	EA	
CURB RAMPS (TY 22) *	EA	
CURB RAMPS	SY	41
ADJ MANHS	EA	
REPLACE GROUND BOX	EA	
RAIL (HANDRAIL)	LF	
DRIVEWAYS (CONC)	SY	
ADJUST METER BOX TO GRADE	EA	

ITEM DESCRIPTION	UNIT	QUANT.
COMPOST MANUF TOPSOIL	SY	7
EXCAVATION (SPECIAL)	CY	
BLOCK SODDING	SY	7

* = FOR CONTRACTOR'S INFORMATION "ONLY" NON-PAY ITEM

STATE OF TEXAS
SCOTT E DUKETTE
83615
LICENSED
PROFESSIONAL ENGINEER
11/19/07

N. T. S.

Texas Department of Transportation
©2007

H.R.Gray For Construction Success

klotz associates

ADA CURB RAMP PROGRAM
BRYAN, TEXAS
FM 158 AT
EMMETT

DN: AJS					
CK DN: SAS	FED. RD. DIV. NO.	STATE	STATE PROJECT NO.		HIGHWAY NO.
DW: GWG	6	TEXAS			VARIES
CK DW: MS/SB	STATE DIST.	COUNTY	CONTROL NO.	SECTION NO.	JOB NO. / SHEET NO.
TR:	BRY	WALKER, ETC.	0917	27	035, ETC. / 129
CK TR:					

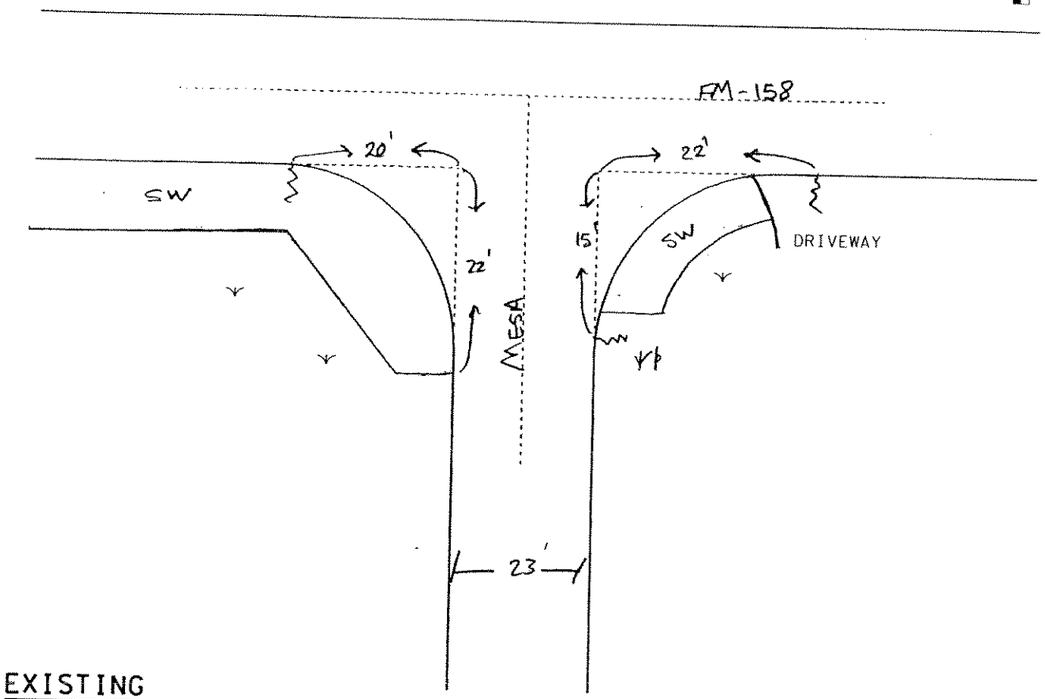

EXISTING

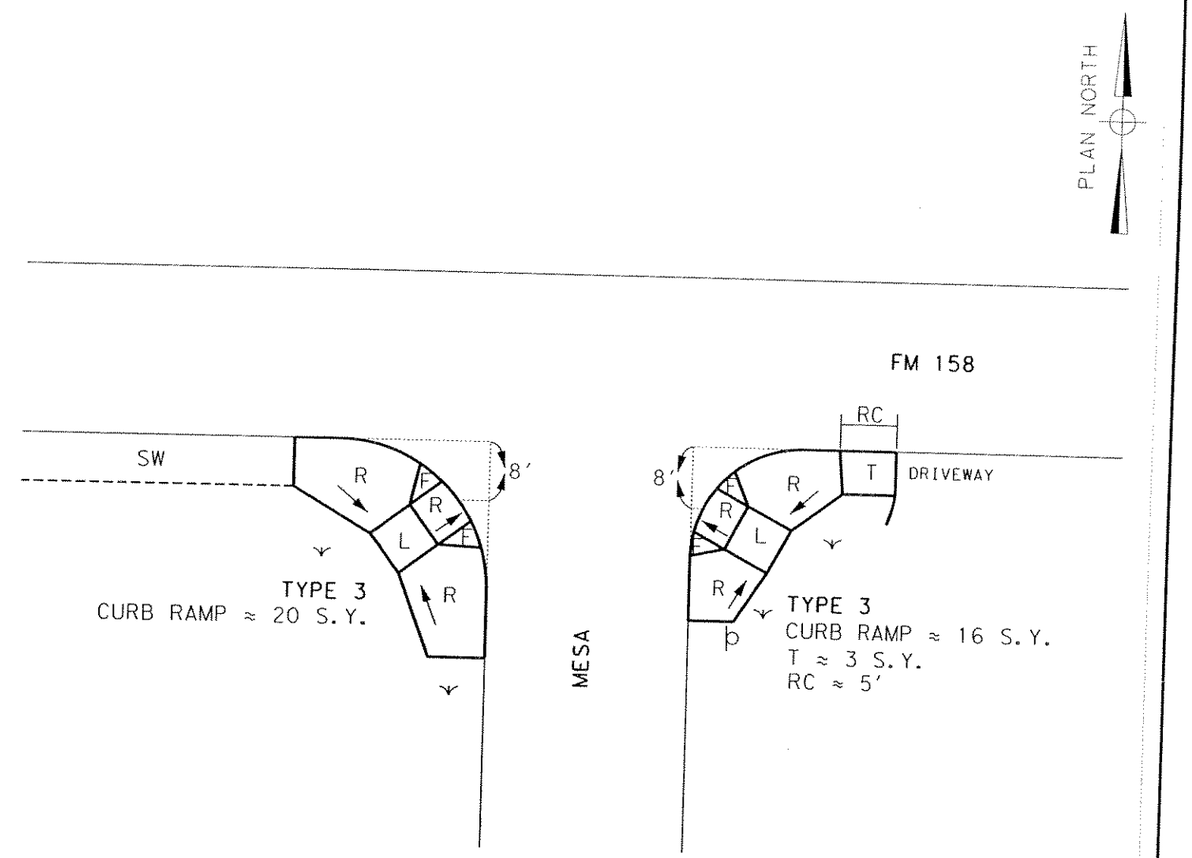

PROPOSED

LEGEND

- ● PP = POWER POLE
- GA = GUY ANCHOR
- TP = EX. TRAF. SIGNAL POLE
- PB = PED BUTTON
- Ⓟ = NEW PED POLE W/ PED BUTTON
- GB = GROUND BOX
- EL = ELECTRICAL PEDESTAL/BOX
- LP = LIGHT POLE
- FH = FIRE HYDRANT
- WV = WATER VALVE
- MH = MANHOLE
- IN = INLET
- TR = TREE
- SH = SHRUB; = GRASS
- SN = SIGN; = NEW CONDUIT
- CL = CONSTRUCTION LIMITS
- ER = EXIST RAMP; SW = SIDEWALK
- L = LANDING; R = RAMP
- F = FLARE; T = TRANSITION
- RC = REPLACE CURB/CURB & GUTTER

ITEM DESCRIPTION	UNIT	QUANT.
RETROFIT DETECTABLE WARNING SURFACE	EA	
REPLACE CONC CURB	LF	5
CONC SIDEWALKS (6")	SY	3
REMOVING CONC (CURB & GUTTER)	LF	5
ELEC CONDR BARE	LF	
CONDT (PVC)	LF	
TRF SIG CBL	LF	
PED DETECT (2 INCH PUSH BTN)	EA	
REMOVAL OF PEDESTRIAN PUSH BUTTONS	EA	
PED POLE ASSEMBLY	EA	
RELOC SM RD SN&AM(TY 10 BWG)	EA	
REF PAV MRK TY 1(W)12"(SLD)	LF	
REF PAV MRK TY 1(W)24"(SLD)	LF	
ELIM EXT PAV MRK & MRKS 12"	LF	
ELIM EXT PAV MRK & MRKS 24"	LF	

ITEM DESCRIPTION	UNIT	QUANT.
CURB RAMPS (TY 1) *	EA	
CURB RAMPS (TY 2) *	EA	
CURB RAMPS (TY 3) *	EA	2
CURB RAMPS (TY 4) *	EA	
CURB RAMPS (TY 5) *	EA	
CURB RAMPS (TY 6) *	EA	
CURB RAMPS (TY 7) *	EA	
CURB RAMPS (TY 9) *	EA	
CURB RAMPS (TY 10) *	EA	
CURB RAMPS (TY 20) *	EA	
CURB RAMPS (TY 21) *	EA	
CURB RAMPS (TY 22) *	EA	
CURB RAMPS	SY	36
ADJ MANHS	EA	
REPLACE GROUND BOX	EA	
RAIL (HANDRAIL)	LF	
DRIVEWAYS (CONC)	SY	
ADJUST METER BOX TO GRADE	EA	

ITEM DESCRIPTION	UNIT	QUANT.
COMPOST MANUF TOPSOIL	SY	7
EXCAVATION (SPECIAL)	CY	
BLOCK SODDING	SY	7

* = FOR CONTRACTOR'S INFORMATION "ONLY" NON-PAY ITEM

STATE OF TEXAS
SCOTT E DUKETTE
83615
LICENSED
PROFESSIONAL ENGINEER
12/6/07

N. T. S.

Texas Department of Transportation
©2007

H.R.Gray For Construction Success

klotz associates

ADA CURB RAMP PROGRAM
BRYAN, TEXAS
FM 158 AT
MESA

DN: AJS					
CK DN: SAS					
DN: GWG					
CK DN: MS/SD					
FHWA					
CK TRF:					

FED. RD. DIV. NO.	STATE	STATE PROJECT NO.			HIGHWAY NO.
6	TEXAS				VARIES
STATE DIST.	COUNTY		CONTROL NO.	SECTION NO.	JOB NO.	SHEET NO.
BRY	WALKER, ETC.		0917	27	035, ETC.	130

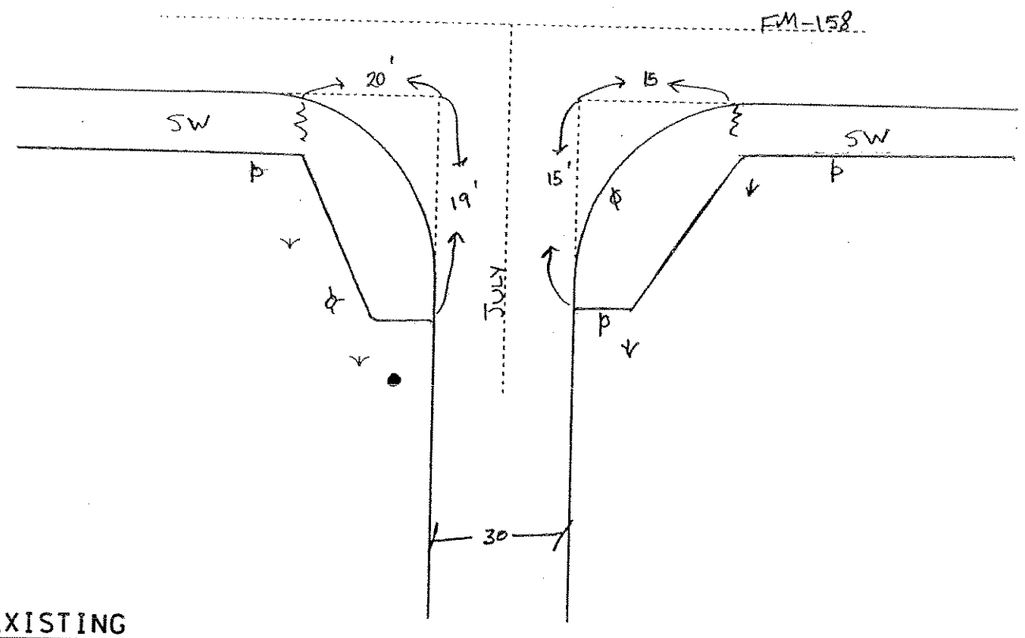

EXISTING

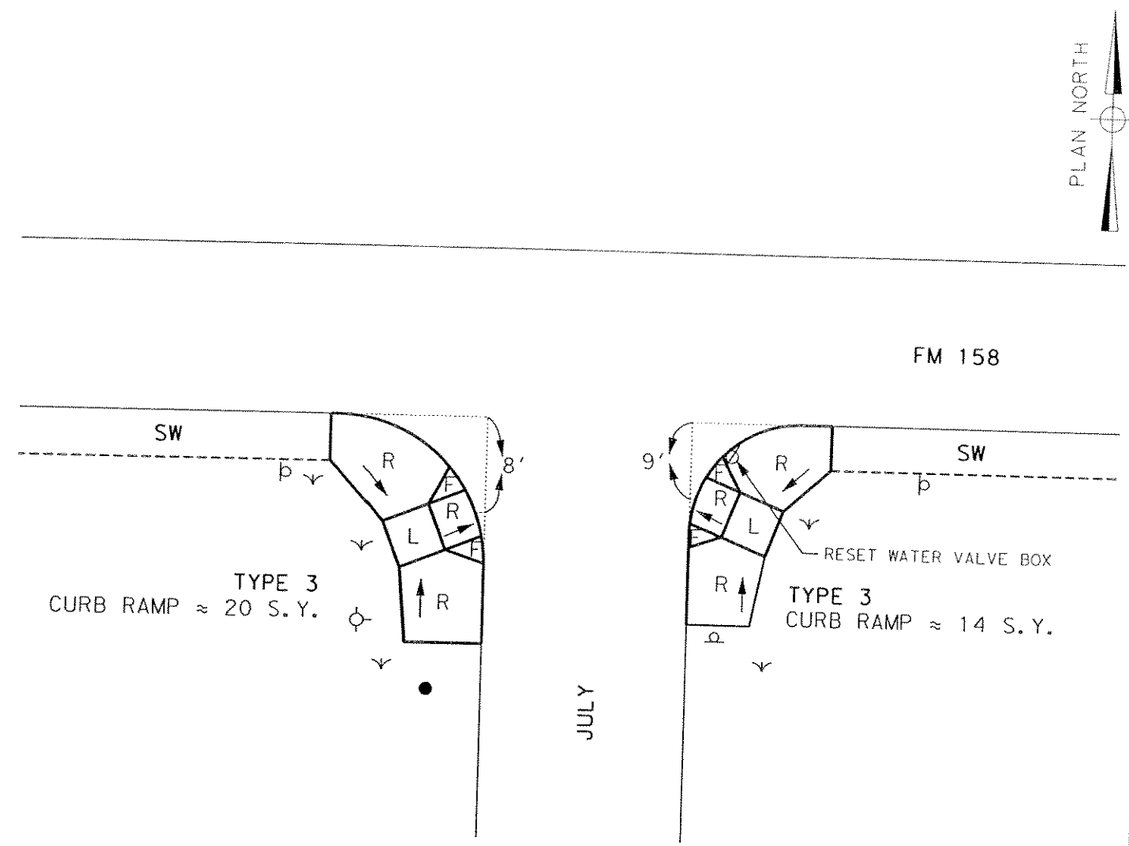

PROPOSED

LEGEND

- ● PP = POWER POLE
- GA = GUY ANCHOR
- TP = EX. TRAF. SIGNAL POLE
- PB = PED BUTTON
- Ⓟ = NEW PED POLE W/ PED BUTTON
- GB = GROUND BOX
- EL = ELECTRICAL PEDESTAL/BOX
- LP = LIGHT POLE
- FH = FIRE HYDRANT
- WV = WATER VALVE
- MH = MANHOLE
- IN = INLET
- TR = TREE
- SH = SHRUB; = GRASS
- SN = SIGN; ····· = NEW CONDUIT
- CL = CONSTRUCTION LIMITS
- ER = EXIST RAMP; SW = SIDEWALK
- L = LANDING; R = RAMP
- F = FLARE; T = TRANSITION
- RC = REPLACE CURB/CURB & GUTTER

ITEM DESCRIPTION	UNIT	QUANT.
RETROFIT DETECTABLE WARNING SURFACE	EA	
REPLACE CONC CURB	LF	
CONC SIDEWALKS (6")	SY	
REMOVING CONC (CURB & GUTTER)	LF	
ELEC CONDR BARE	LF	
CONDT (PVC)	LF	
TRF SIG CBL	LF	
PED DETECT (2 INCH PUSH BTN)	EA	
REMOVAL OF PEDESTRIAN PUSH BUTTONS	EA	
PED POLE ASSEMBLY	EA	
RELOC SM RD SN&AM(TY 10 BWG)	EA	
REF PAV MRK TY 1(W)12"(SLD)	LF	
REF PAV MRK TY 1(W)24"(SLD)	LF	
ELIM EXT PAV MRK & MRKS 12"	LF	
ELIM EXT PAV MRK & MRKS 24"	LF	

ITEM DESCRIPTION	UNIT	QUANT.
CURB RAMPS (TY 1) *	EA	
CURB RAMPS (TY 2) *	EA	
CURB RAMPS (TY 3) *	EA	2
CURB RAMPS (TY 4) *	EA	
CURB RAMPS (TY 5) *	EA	
CURB RAMPS (TY 6) *	EA	
CURB RAMPS (TY 7) *	EA	
CURB RAMPS (TY 9) *	EA	
CURB RAMPS (TY 10) *	EA	
CURB RAMPS (TY 20) *	EA	
CURB RAMPS (TY 21) *	EA	
CURB RAMPS (TY 22) *	EA	
CURB RAMPS	SY	34
ADJ MANHS	EA	
REPLACE GROUND BOX	EA	
RAIL (HANDRAIL)	LF	
DRIVEWAYS (CONC)	SY	
ADJUST METER BOX TO GRADE	EA	

ITEM DESCRIPTION	UNIT	QUANT.
COMPOST MANUF TOPSOIL	SY	6
EXCAVATION (SPECIAL)	CY	
BLOCK SODDING	SY	6

* = FOR CONTRACTOR'S INFORMATION "ONLY" NON-PAY ITEM

STATE OF TEXAS
SCOTT E DUKETTE
83615
LICENSED
PROFESSIONAL ENGINEER
11/19/07

N. T. S.

Texas Department of Transportation
©2007

H.R.Gray For Construction Success

klotz associates

ADA CURB RAMP PROGRAM
BRYAN, TEXAS
FM 158 AT
JULY

DN: AJS	FED. RD. DIV. NO.	STATE	STATE PROJECT NO.			HIGHWAY NO.
CK DN: SAS	6	TEXAS				VARIES
DW: CWC	STATE DIST.	COUNTY		CONTROL NO.	SECTION NO.	JOB NO.	SHEET NO.
CK DW: MS/SD	BRY	WALKER, ETC.		0917	27	035, ETC.	131
TRF							
CK TRF							

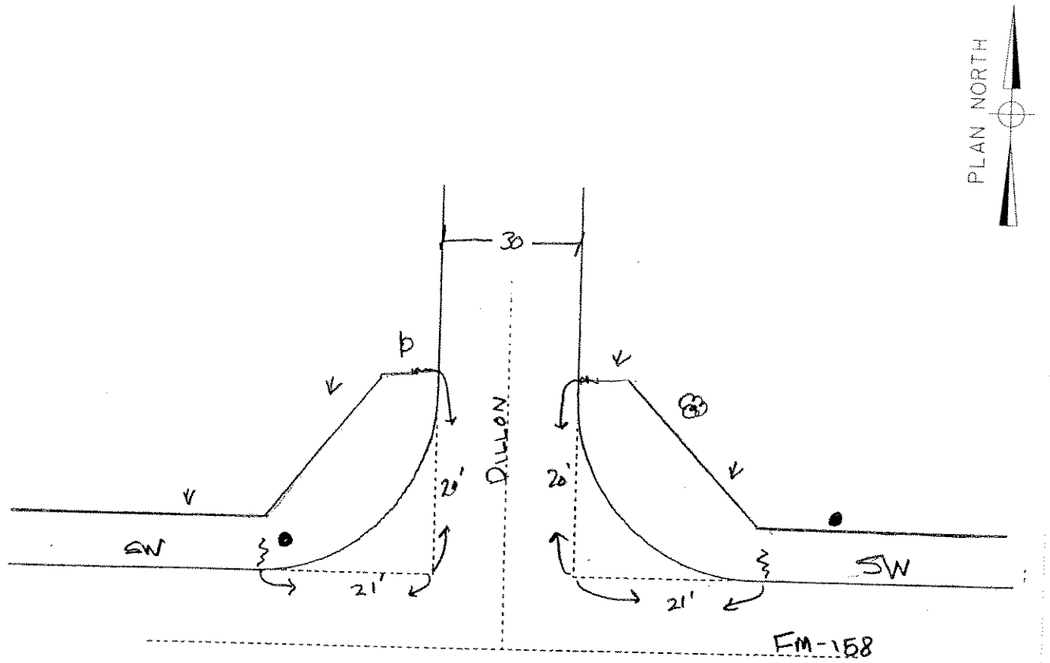

EXISTING

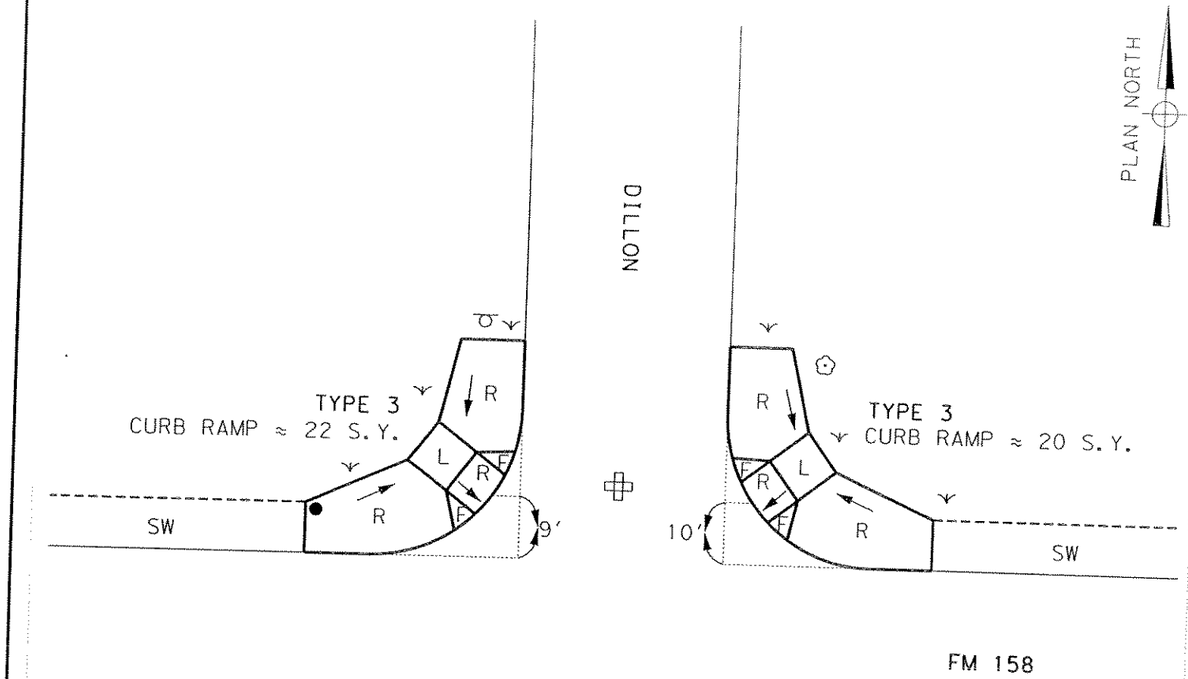

PROPOSED

⊕ = RELOCATE STOP BAR

LEGEND

- ● PP = POWER POLE
- GA = GUY ANCHOR
- ⊙ TP = EX. TRAF. SIGNAL POLE
- PB = PED BUTTON
- Ⓟ = NEW PED POLE W/ PED BUTTON
- ⊠ GB = GROUND BOX
- EL = ELECTRICAL PEDESTAL/BOX
- LP = LIGHT POLE
- FH = FIRE HYDRANT
- WV = WATER VALVE
- MH = MANHOLE
- IN = INLET
- TR = TREE
- SH = SHRUB; = GRASS
- SN = SIGN; = NEW CONDUIT
- CL = CONSTRUCTION LIMITS
- ER = EXIST RAMP; SW = SIDEWALK
- L = LANDING; R = RAMP
- F = FLARE; T = TRANSITION
- RC = REPLACE CURB/CURB & GUTTER

ITEM DESCRIPTION	UNIT	QUANT.
RETROFIT DETECTABLE WARNING SURFACE	EA	
REPLACE CONC CURB	LF	
CONC SIDEWALKS (6")	SY	
REMOVING CONC (CURB & GUTTER)	LF	
ELEC CONDR BARE	LF	
CONDT (PVC)	LF	
TRF SIG CBL	LF	
PED DETECT (2 INCH PUSH BTN)	EA	
REMOVAL OF PEDESTRIAN PUSH BUTTONS	EA	
PED POLE ASSEMBLY	EA	
RELOC SM RD SN&AM(TY 10 BWG)	EA	
REF PAV MRK TY 1(W)12"(SLD)	LF	
REF PAV MRK TY 1(W)24"(SLD)	LF	15
ELIM EXT PAV MRK & MRKS 12"	LF	
ELIM EXT PAV MRK & MRKS 24"	LF	15

ITEM DESCRIPTION	UNIT	QUANT.
CURB RAMPS (TY 1) *	EA	
CURB RAMPS (TY 2) *	EA	
CURB RAMPS (TY 3) *	EA	2
CURB RAMPS (TY 4) *	EA	
CURB RAMPS (TY 5) *	EA	
CURB RAMPS (TY 6) *	EA	
CURB RAMPS (TY 7) *	EA	
CURB RAMPS (TY 9) *	EA	
CURB RAMPS (TY 10) *	EA	
CURB RAMPS (TY 20) *	EA	
CURB RAMPS (TY 21) *	EA	
CURB RAMPS (TY 22) *	EA	
CURB RAMPS	SY	42
ADJ MANHS	EA	
REPLACE GROUND BOX	EA	
RAIL (HANDRAIL)	LF	
DRIVEWAYS (CONC)	SY	
ADJUST METER BOX TO GRADE	EA	

ITEM DESCRIPTION	UNIT	QUANT.
COMPOST MANUF TOPSOIL	SY	8
EXCAVATION (SPECIAL)	CY	
BLOCK SODDING	SY	8

* = FOR CONTRACTOR'S INFORMATION "ONLY" NON-PAY ITEM

STATE OF TEXAS
SCOTT E. DUKETTE
83615
LICENSED
PROFESSIONAL ENGINEER
11/19/07

N. T. S.

Texas Department of Transportation
©2007

H.R.Gray For Construction Success

klotz associates

ADA CURB RAMP PROGRAM
BRYAN, TEXAS
FM 158 AT
DILLON

DN: AJS	FED. RD. DIV. NO.	STATE	STATE PROJECT NO.		HIGHWAY NO.
CK DN: SAS	6	TEXAS			VARIES
DW: GWC	STATE DIST.	COUNTY	CONTROL NO.	SECTION NO.	JOB NO. / SHEET NO.
CK DW: MS/SD	BRY	WALKER, ETC.	0911	27	035 ETC / 123
TR:					
CK TR:					

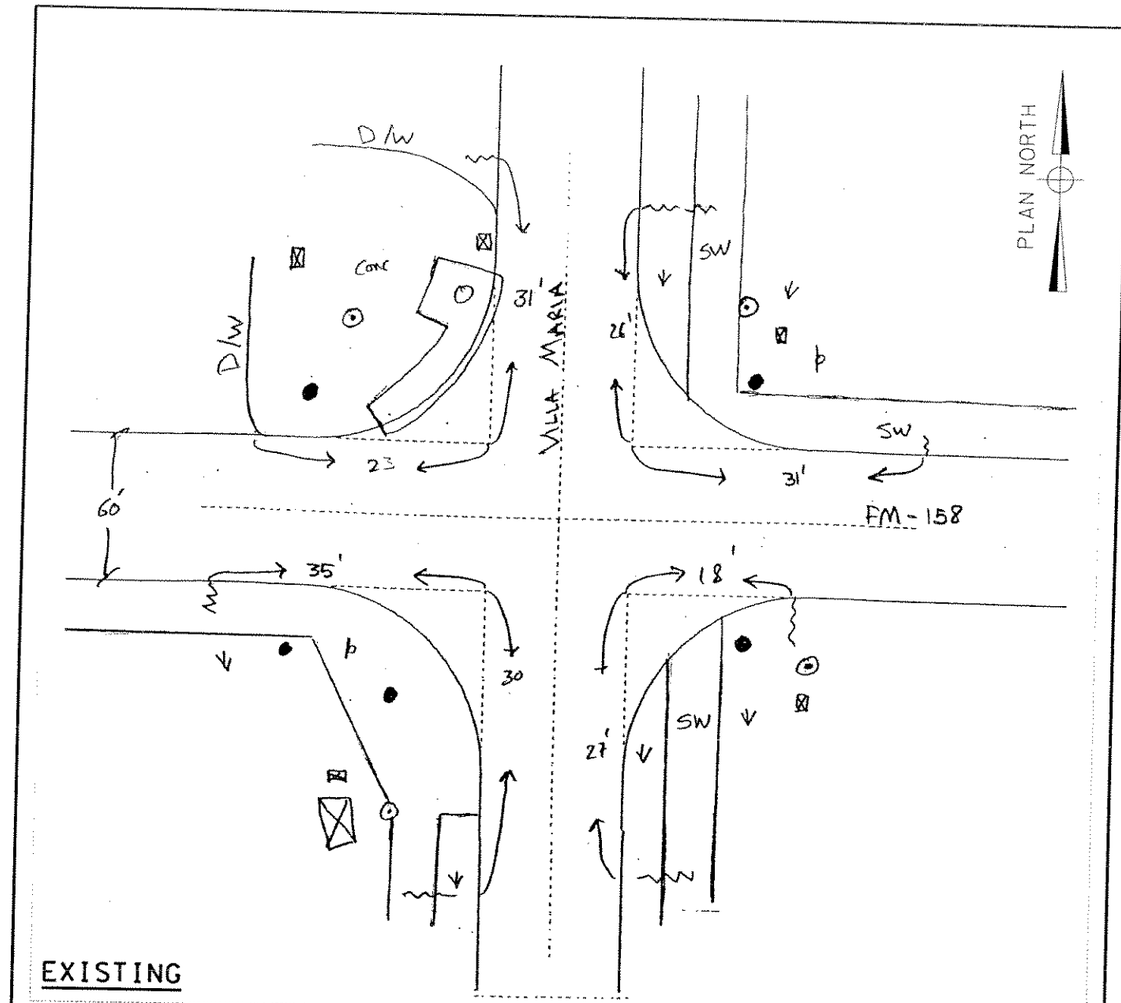

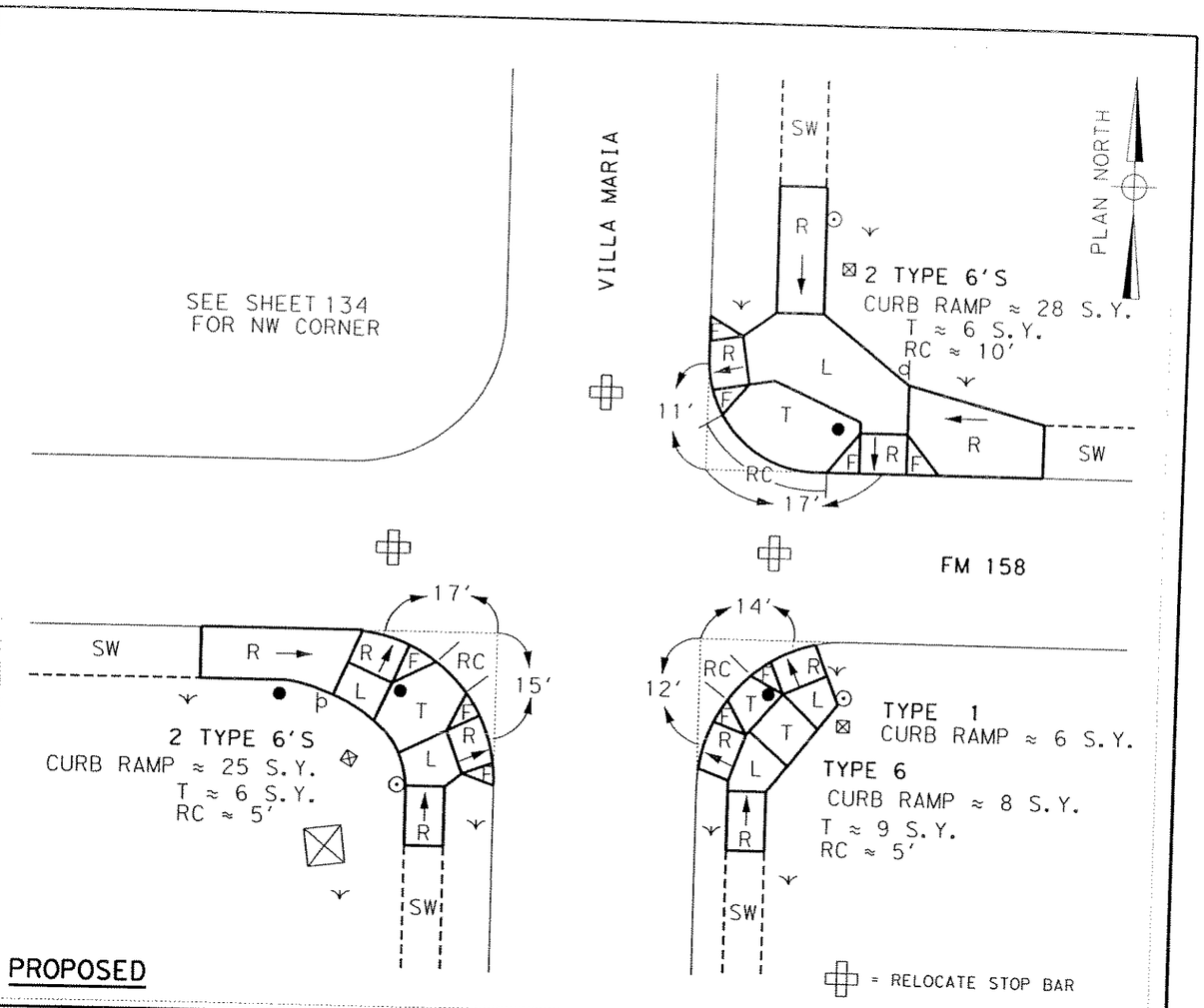

LEGEND

- ● PP = POWER POLE
- GA = GUY ANCHOR
- TP = EX. TRAF. SIGNAL POLE
- PB = PED BUTTON
- Ⓟ = NEW PED POLE W/ PED BUTTON
- GB = GROUND BOX
- EL = ELECTRICAL PEDESTAL/BOX
- LP = LIGHT POLE
- FH = FIRE HYDRANT
- WV = WATER VALVE
- MH = MANHOLE
- IN = INLET
- TR = TREE
- SH = SHRUB; = GRASS
- SN = SIGN; = NEW CONDUIT
- CL = CONSTRUCTION LIMITS
- ER = EXIST RAMP; SW = SIDEWALK
- L = LANDING; R = RAMP
- F = FLARE; T = TRANSITION
- RC = REPLACE CURB/CURB & GUTTER

ITEM DESCRIPTION	UNIT	QUANT.
RETROFIT DETECTABLE WARNING SURFACE	EA	
REPLACE CONC CURB	LF	32
CONC SIDEWALKS (6")	SY	35
REMOVING CONC (CURB & GUTTER)	LF	32
ELEC CONDR BARE	LF	
CONDT (PVC)	LF	
TRF SIG CBL	LF	
PED DETECT (2 INCH PUSH BTN)	EA	
REMOVAL OF PEDESTRIAN PUSH BUTTONS	EA	
PED POLE ASSEMBLY	EA	
RELOC SM RD SN&AM(TY 10 BWG)	EA	
REF PAV MRK TY 1(W)12"(SLD)	LF	
REF PAV MRK TY 1(W)24"(SLD)	LF	90
ELIM EXT PAV MRK & MRKS 12"	LF	
ELIM EXT PAV MRK & MRKS 24"	LF	90

ITEM DESCRIPTION	UNIT	QUANT.
CURB RAMPS (TY 1) *	EA	2
CURB RAMPS (TY 2) *	EA	
CURB RAMPS (TY 3) *	EA	1
CURB RAMPS (TY 4) *	EA	
CURB RAMPS (TY 5) *	EA	
CURB RAMPS (TY 6) *	EA	5
CURB RAMPS (TY 7) *	EA	
CURB RAMPS (TY 9) *	EA	
CURB RAMPS (TY 10) *	EA	
CURB RAMPS (TY 20) *	EA	
CURB RAMPS (TY 21) *	EA	
CURB RAMPS (TY 22) *	EA	
CURB RAMPS	SY	89
ADJ MANHS	EA	
REPLACE GROUND BOX	EA	1
RAIL (HANDRAIL)	LF	
DRIVEWAYS (CONC)	SY	
ADJUST METER BOX TO GRADE	EA	

ITEM DESCRIPTION	UNIT	QUANT.
COMPOST MANUF TOPSOIL	SY	23
EXCAVATION (SPECIAL)	CY	
BLOCK SODDING	SY	23
RETAINING WALL (CONC BLOCK)	SF	75

* = FOR CONTRACTOR'S INFORMATION "ONLY" NON-PAY ITEM

STATE OF TEXAS
SCOTT E DUKETTE
83615
LICENSED
PROFESSIONAL ENGINEER
12/6/07

N. T. S.

Texas Department of Transportation
©2007

H.R.Gray For Construction Success

klotz associates

ADA CURB RAMP PROGRAM

BRYAN, TEXAS
FM 158 AT
VILLA MARIA

DN: AJS	FED. RD. DIV. NO.	STATE	STATE PROJECT NO.			HIGHWAY NO.	
CK DN: SAS	6	TEXAS				VARIES	
DN: GWG	STATE DIST.	COUNTY		CONTROL NO.	SECTION NO.	JOB NO.	SHEET NO.
CK DN: MS/SD	BRY	WALKER, ETC.		0917	27	035, ETC.	133

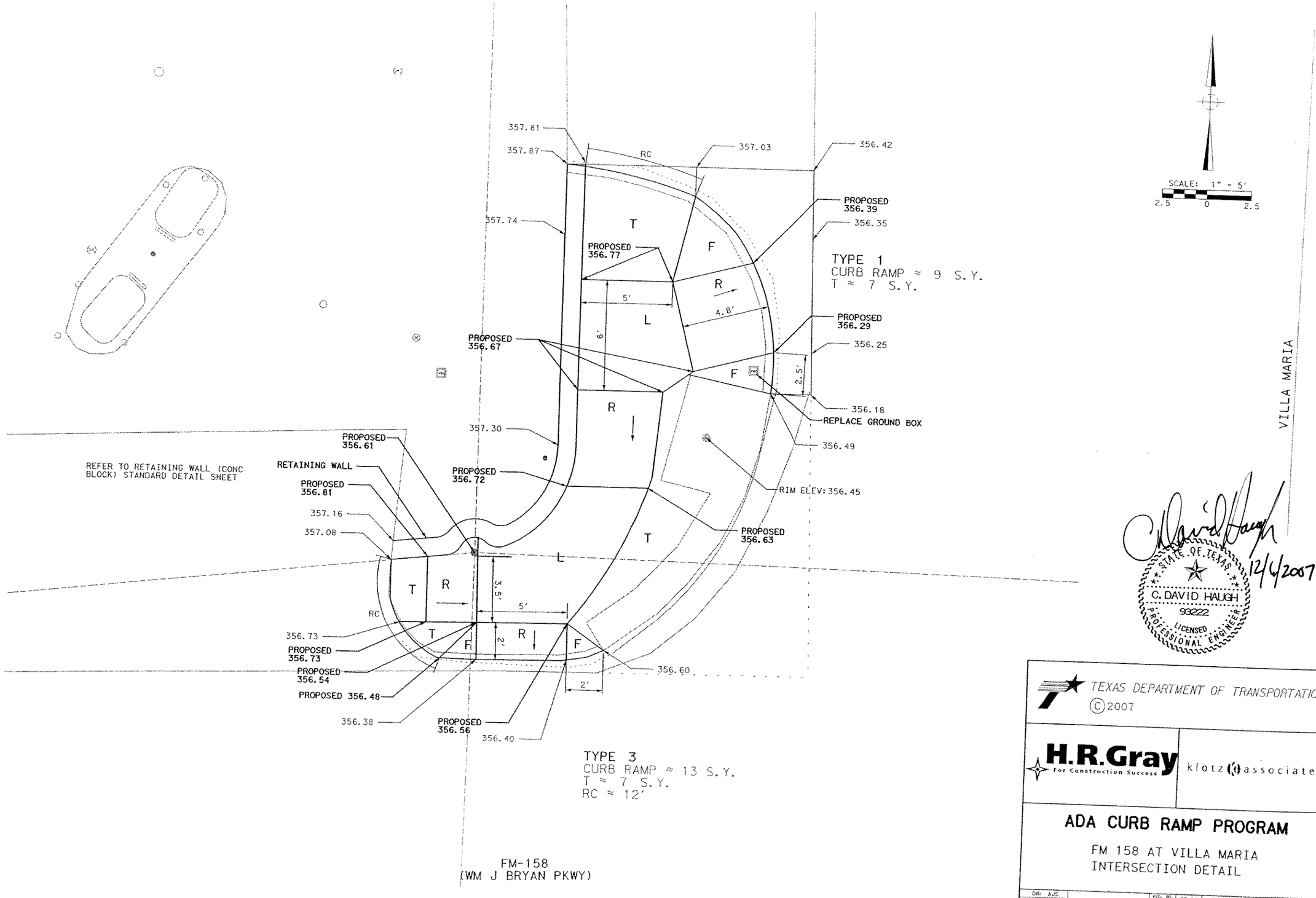

NOTE:
SEE SHEET 135
FOR QUANTITIES

STATE OF TEXAS
C. DAVID HAUGH
93222
LICENSED
PROFESSIONAL ENGINEER
12/6/2007

TEXAS DEPARTMENT OF TRANSPORTATION
©2007

H.R.Gray For Construction Success

klotz associates

ADA CURB RAMP PROGRAM

FM 158 AT VILLA MARIA
INTERSECTION DETAIL

DN: AJS	FED. RD. DIV. NO.	STATE	STATE PROJECT NO.		HIGHWAY NO.
CK DN: SAS	6	TEXAS			VARIES
DW: JEM	STATE DIST.	COUNTY	CONTROL NO.	SECTION NO.	JOB NO. / SHEET NO.
CK DW: MS/SD	BRY	WALKER			
TR:					
CK TR:					

11/30/2007 9:41:19 AM V:\WorkSpace\BRYAN\dgn\RDWY\BRY17*02-04ROT158 ø VM*JS2D.dgn

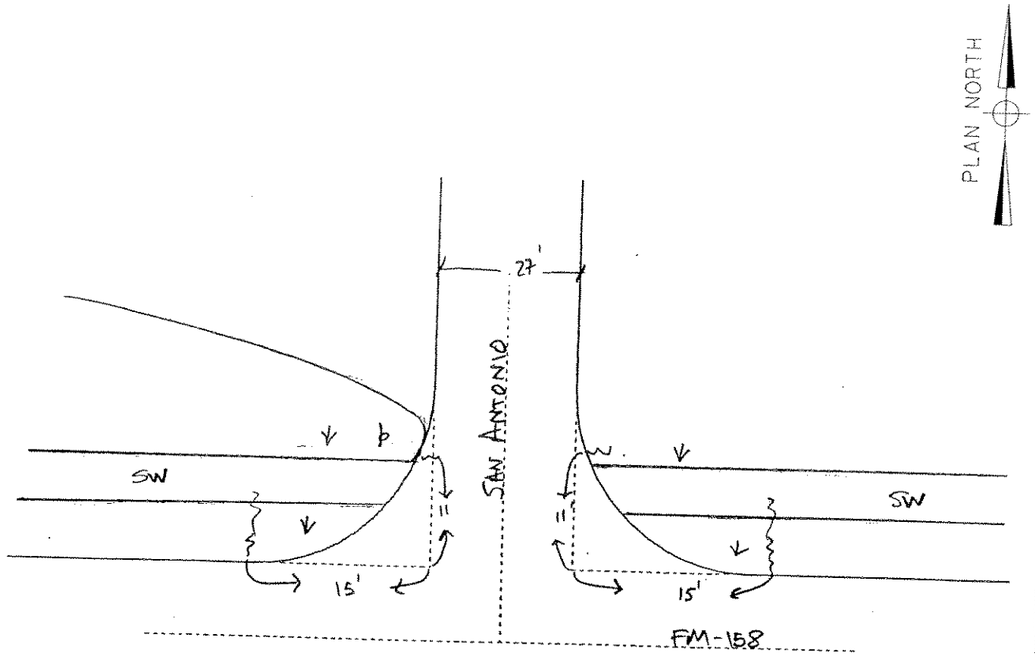

EXISTING

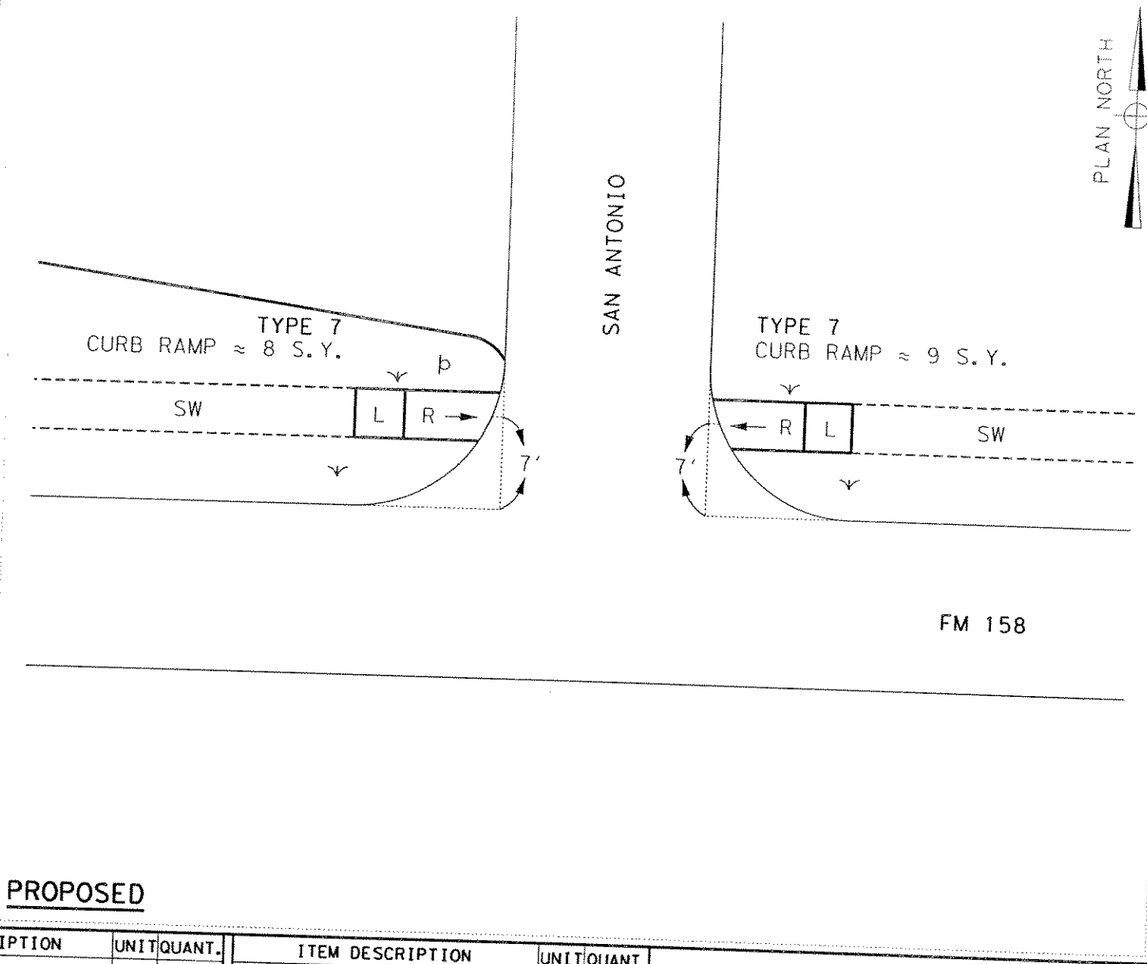

PROPOSED

LEGEND

- ● PP = POWER POLE
- GA = GUY ANCHOR
- TP = EX. TRAF. SIGNAL POLE
- PB = PED BUTTON
- Ⓟ = NEW PED POLE W/ PED BUTTON
- GB = GROUND BOX
- EL = ELECTRICAL PEDESTAL/BOX
- LP = LIGHT POLE
- FH = FIRE HYDRANT
- WV = WATER VALVE
- MH = MANHOLE
- IN = INLET
- TR = TREE
- SH = SHRUB; = GRASS
- SN = SIGN; = NEW CONDUIT
- CL = CONSTRUCTION LIMITS
- ER = EXIST RAMP; SW = SIDEWALK
- L = LANDING; R = RAMP
- F = FLARE; T = TRANSITION
- RC = REPLACE CURB/CURB & GUTTER

ITEM DESCRIPTION	UNIT	QUANT.
RETROFIT DETECTABLE WARNING SURFACE	EA	
REPLACE CONC CURB	LF	
CONC SIDEWALKS (6")	SY	
REMOVING CONC (CURB & GUTTER)	LF	
ELEC CONDR BARE	LF	
CONDT (PVC)	LF	
TRF SIG CBL	LF	
PED DETECT (2 INCH PUSH BTN)	EA	
REMOVAL OF PEDESTRIAN PUSH BUTTONS	EA	
PED POLE ASSEMBLY	EA	
RELOC SM RD SN&AM(TY 10 BWG)	EA	
REF PAV MRK TY 1(W)12"(SLD)	LF	
REF PAV MRK TY 1(W)24"(SLD)	LF	
ELIM EXT PAV MRK & MRKS 12"	LF	
ELIM EXT PAV MRK & MRKS 24"	LF	

ITEM DESCRIPTION	UNIT	QUANT.
CURB RAMPS (TY 1) *	EA	
CURB RAMPS (TY 2) *	EA	
CURB RAMPS (TY 3) *	EA	
CURB RAMPS (TY 4) *	EA	
CURB RAMPS (TY 5) *	EA	
CURB RAMPS (TY 6) *	EA	
CURB RAMPS (TY 7) *	EA	2
CURB RAMPS (TY 9) *	EA	
CURB RAMPS (TY 10) *	EA	
CURB RAMPS (TY 20) *	EA	
CURB RAMPS (TY 21) *	EA	
CURB RAMPS (TY 22) *	EA	
CURB RAMPS	SY	17
ADJ MANHS	EA	
REPLACE GROUND BOX	EA	
RAIL (HANDRAIL)	LF	
DRIVEWAYS (CONC)	SY	
ADJUST METER BOX TO GRADE	EA	

ITEM DESCRIPTION	UNIT	QUANT.
COMPOST MANUF TOPSOIL	SY	7
EXCAVATION (SPECIAL)	CY	
BLOCK SODDING	SY	7

* = FOR CONTRACTOR'S INFORMATION "ONLY" NON-PAY ITEM

STATE OF TEXAS
SCOTT E DUKETTE
83615
LICENSED
PROFESSIONAL ENGINEER
11/19/07

N. T. S.

Texas Department of Transportation
©2007

H.R.Gray For Construction Success

klotz associates

ADA CURB RAMP PROGRAM
BRYAN, TEXAS
FM 158 AT
SAN ANTONIO

DN: AJS	FED. RD. DIV. NO.	STATE	STATE PROJECT NO.	HIGHWAY NO.	
CK DN: SAS	6	TEXAS		VARIES	
DW: GWG					
CK DW: MS/SD	STATE DIST.	COUNTY	CONTROL NO.	SECTION NO.	JOB NO. / SHEET NO.
TR:					
CK TR:	BRY	WALKER, ETC.	0917	27	035 ETC / 1 XS

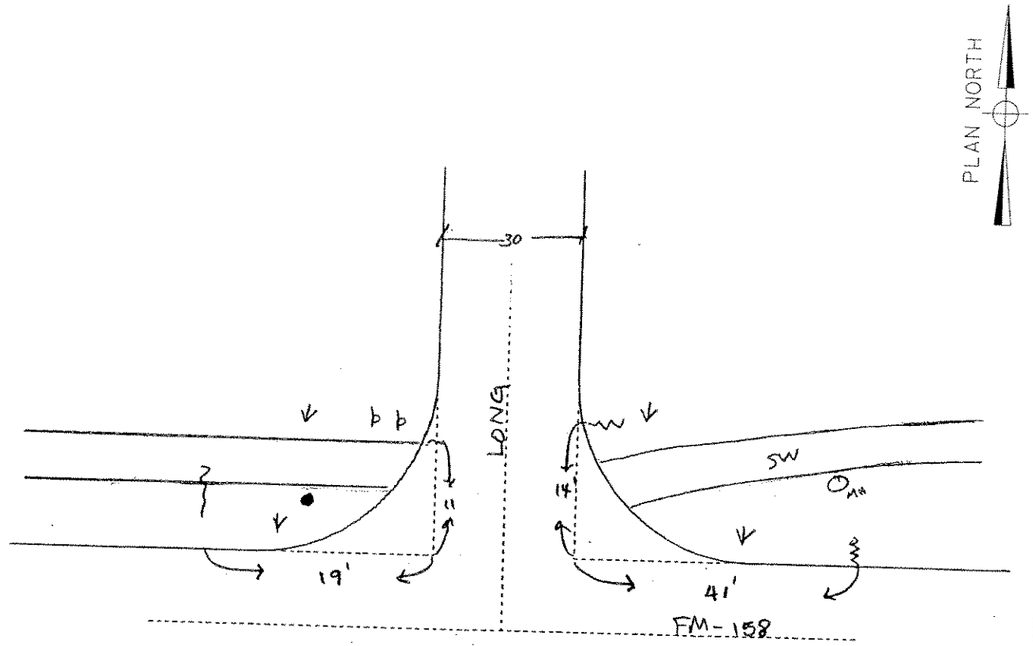

EXISTING

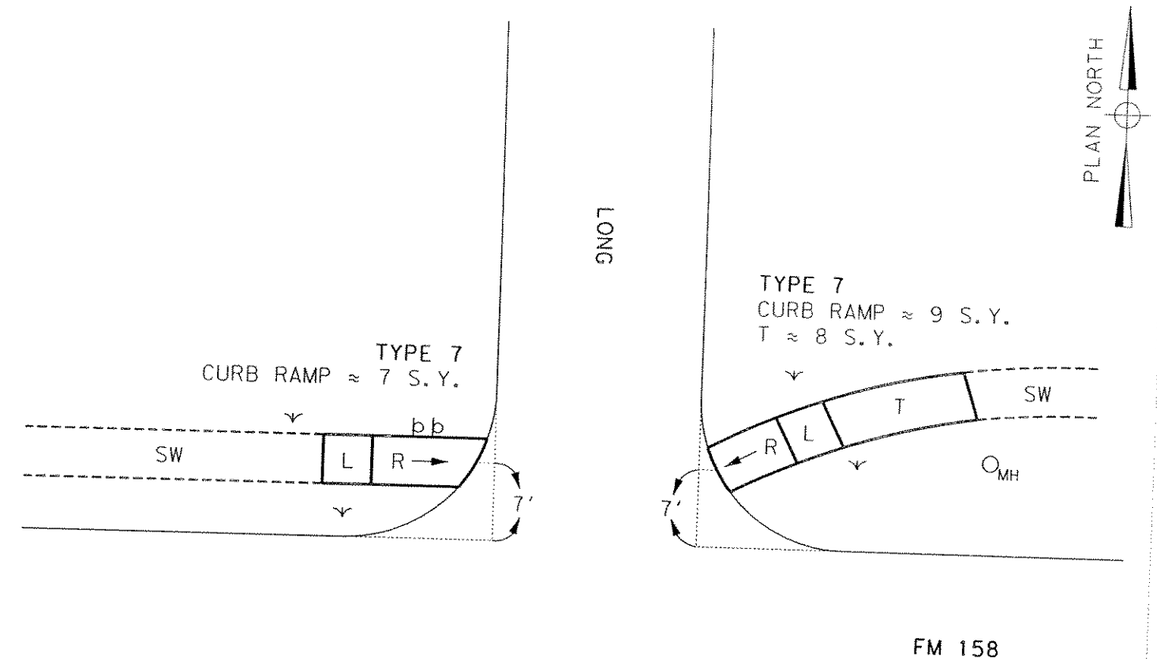

PROPOSED

LEGEND

- ● PP = POWER POLE
- GA = GUY ANCHOR
- TP = EX. TRAF. SIGNAL POLE
- PB = PED BUTTON
- Ⓟ = NEW PED POLE W/ PED BUTTON
- GB = GROUND BOX
- EL = ELECTRICAL PEDESTAL/BOX
- LP = LIGHT POLE
- FH = FIRE HYDRANT
- WV = WATER VALVE
- MH = MANHOLE
- IN = INLET
- TR = TREE
- SH = SHRUB; = GRASS
- SN = SIGN; = NEW CONDUIT
- CL = CONSTRUCTION LIMITS
- ER = EXIST RAMP; SW = SIDEWALK
- L = LANDING; R = RAMP
- F = FLARE; T = TRANSITION
- RC = REPLACE CURB/CURB & GUTTER

ITEM DESCRIPTION	UNIT	QUANT.
RETROFIT DETECTABLE WARNING SURFACE	EA	
REPLACE CONC CURB	LF	
CONC SIDEWALKS (6")	SY	8
REMOVING CONC (CURB & GUTTER)	LF	
ELEC CONDR BARE	LF	
CONDT (PVC)	LF	
TRF SIG CBL	LF	
PED DETECT (2 INCH PUSH BTN)	EA	
REMOVAL OF PEDESTRIAN PUSH BUTTONS	EA	
PED POLE ASSEMBLY	EA	
RELOC SM RD SN&AM(TY 10 BWG)	EA	
REF PAV MRK TY 1(W)12"(SLD)	LF	
REF PAV MRK TY 1(W)24"(SLD)	LF	
ELIM EXT PAV MRK & MRKS 12"	LF	
ELIM EXT PAV MRK & MRKS 24"	LF	

ITEM DESCRIPTION	UNIT	QUANT.
CURB RAMPS (TY 1) *	EA	
CURB RAMPS (TY 2) *	EA	
CURB RAMPS (TY 3) *	EA	
CURB RAMPS (TY 4) *	EA	
CURB RAMPS (TY 5) *	EA	
CURB RAMPS (TY 6) *	EA	
CURB RAMPS (TY 7) *	EA	2
CURB RAMPS (TY 9) *	EA	
CURB RAMPS (TY 10) *	EA	
CURB RAMPS (TY 20) *	EA	
CURB RAMPS (TY 21) *	EA	
CURB RAMPS (TY 22) *	EA	
CURB RAMPS	SY	16
ADJ MANHS	EA	
REPLACE GROUND BOX	EA	
RAIL (HANDRAIL)	LF	
DRIVEWAYS (CONC)	SY	
ADJUST METER BOX TO GRADE	EA	

ITEM DESCRIPTION	UNIT	QUANT.
COMPOST MANUF TOPSOIL	SY	10
EXCAVATION (SPECIAL)	CY	
BLOCK SODDING	SY	10

* = FOR CONTRACTOR'S INFORMATION "ONLY" NON-PAY ITEM

STATE OF TEXAS
SCOTT E DUKETTE
83615
LICENSED
PROFESSIONAL ENGINEER
11/19/07

N. T. S.

Texas Department of Transportation
©2007

H.R.Gray For Construction Success

klotz associates

ADA CURB RAMP PROGRAM

BRYAN, TEXAS
FM 158 AT
LONG

DN: KJS					
CK DN: SAS	FED. RD. DIV. NO.	STATE	STATE PROJECT NO.		HIGHWAY NO.
DW: CMC	6	TEXAS			VARIES
CK DW: MS/SD	STATE DIST.	COUNTY	CONTROL NO.	SECTION NO.	JOB NO. / SHEET NO.
TR:	BRY	WALKER, ETC.	0917	27	035, ETC/ 136
CK TR:					

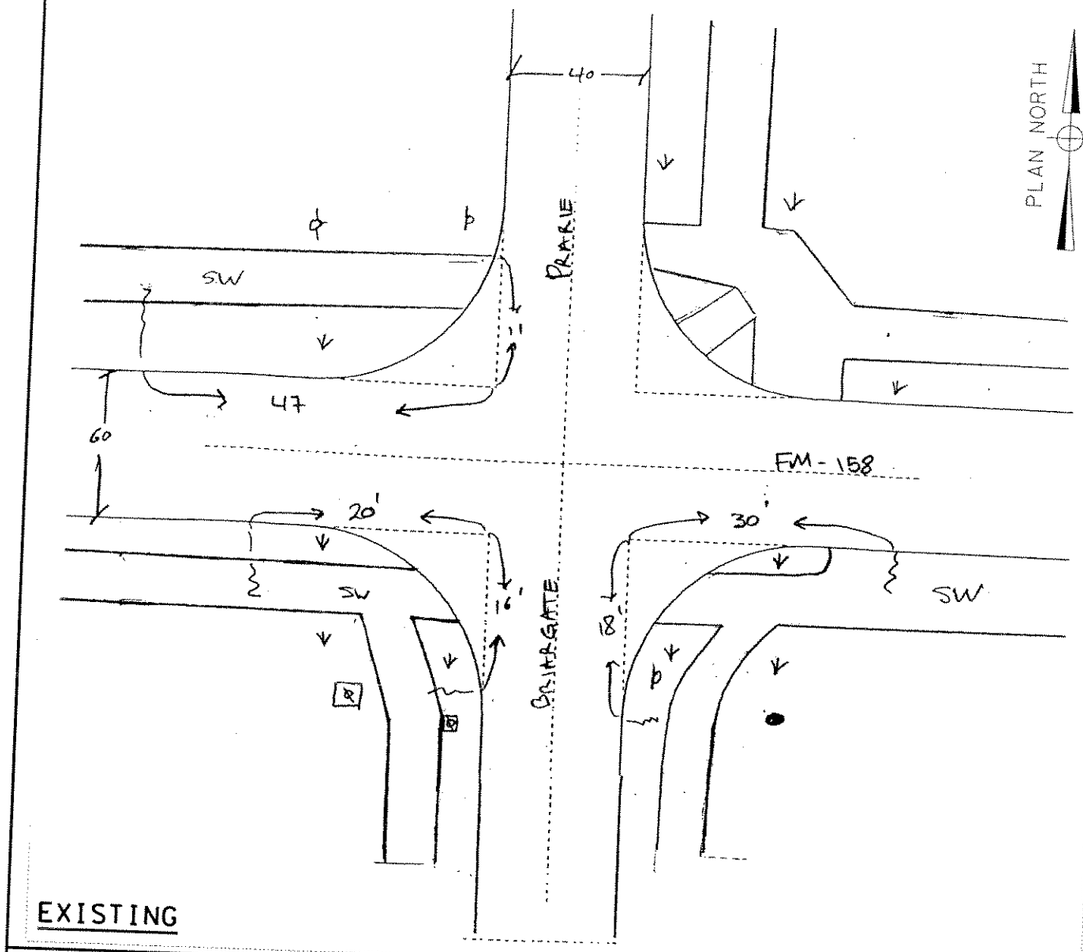

EXISTING

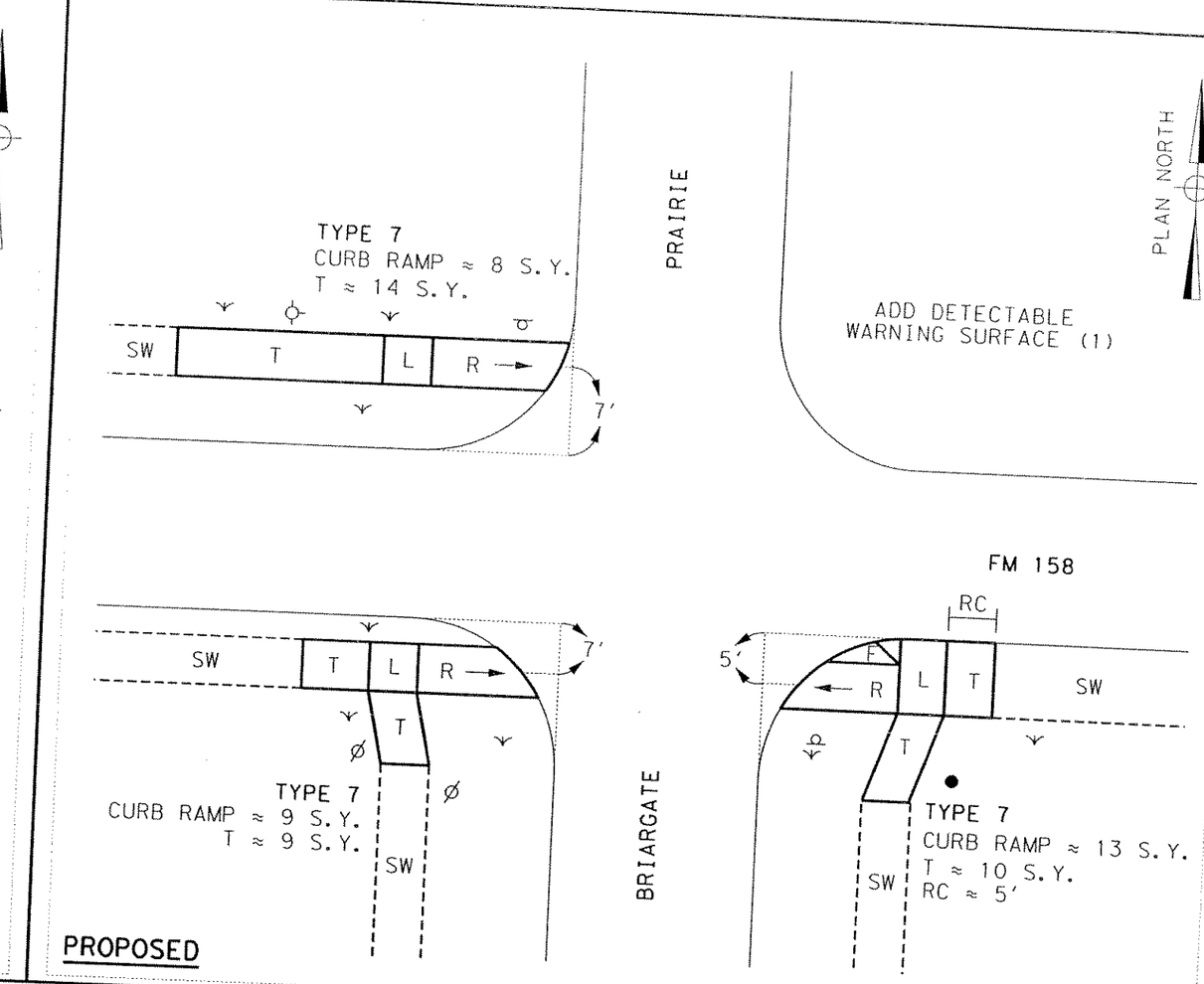

PROPOSED

LEGEND

- PP = POWER POLE
- GA = GUY ANCHOR
- TP = EX. TRAF. SIGNAL POLE
- PB = PED BUTTON
- (P) = NEW PED POLE W/ PED BUTTON
- GB = GROUND BOX
- EL = ELECTRICAL PEDESTAL/BOX
- LP = LIGHT POLE
- FH = FIRE HYDRANT
- WV = WATER VALVE
- MH = MANHOLE
- IN = INLET
- TR = TREE
- SH = SHRUB; = GRASS
- SN = SIGN; ..... = NEW CONDUIT
- CL = CONSTRUCTION LIMITS
- ER = EXIST RAMP; SW = SIDEWALK
- L = LANDING; R = RAMP
- F = FLARE; T = TRANSITION
- RC = REPLACE CURB/CURB & GUTTER

ITEM DESCRIPTION	UNIT	QUANT.
RETROFIT DETECTABLE WARNING SURFACE	EA	1
REPLACE CONC CURB	LF	5
CONC SIDEWALKS (6")	SY	33
REMOVING CONC (CURB & GUTTER)	LF	5
ELEC CONDR BARE	LF	
CONDT (PVC)	LF	
TRF SIG CBL	LF	
PED DETECT (2 INCH PUSH BTN)	EA	
REMOVAL OF PEDESTRIAN PUSH BUTTONS	EA	
PED POLE ASSEMBLY	EA	
RELOC SM RD SN&AM(TY 10 BWG)	EA	
REF PAV MRK TY 1(W)12"(SLD)	LF	
REF PAV MRK TY 1(W)24"(SLD)	LF	
ELIM EXT PAV MRK & MRKS 12"	LF	
ELIM EXT PAV MRK & MRKS 24"	LF	

ITEM DESCRIPTION	UNIT	QUANT.
CURB RAMPS (TY 1) *	EA	
CURB RAMPS (TY 2) *	EA	
CURB RAMPS (TY 3) *	EA	
CURB RAMPS (TY 4) *	EA	
CURB RAMPS (TY 5) *	EA	
CURB RAMPS (TY 6) *	EA	
CURB RAMPS (TY 7) *	EA	3
CURB RAMPS (TY 9) *	EA	
CURB RAMPS (TY 10) *	EA	
CURB RAMPS (TY 20) *	EA	
CURB RAMPS (TY 21) *	EA	
CURB RAMPS (TY 22) *	EA	
CURB RAMPS	SY	30
ADJ MANHS	EA	
REPLACE GROUND BOX	EA	
RAIL (HANDRAIL)	LF	
DRIVEWAYS (CONC)	SY	
ADJUST METER BOX TO GRADE	EA	

ITEM DESCRIPTION	UNIT	QUANT.
COMPOST MANUF TOPSOIL	SY	14
EXCAVATION (SPECIAL)	CY	
BLOCK SODDING	SY	14

* = FOR CONTRACTOR'S INFORMATION "ONLY" NON-PAY ITEM

STATE OF TEXAS
SCOTT E. DUKETTE
83615
LICENSED
PROFESSIONAL ENGINEER
12/6/07

N. T. S.

Texas Department of Transportation
©2007

H.R.Gray For Construction Success

klotz associates

ADA CURB RAMP PROGRAM

BRYAN, TEXAS
FM 158 AT
BRIARGATE/PRAIRIE

DN: AJS	FED. RD. DIV. NO. 6	STATE TEXAS	STATE PROJECT NO.
CK DN: SAS			HIGHWAY NO. VARIES
DW: DWC			
CK DW: MS/SD			
TR:	STATE DIST.	COUNTY	CONTROL NO. / SECTION NO. / JOB NO. / SHEET NO.
CK TR:			