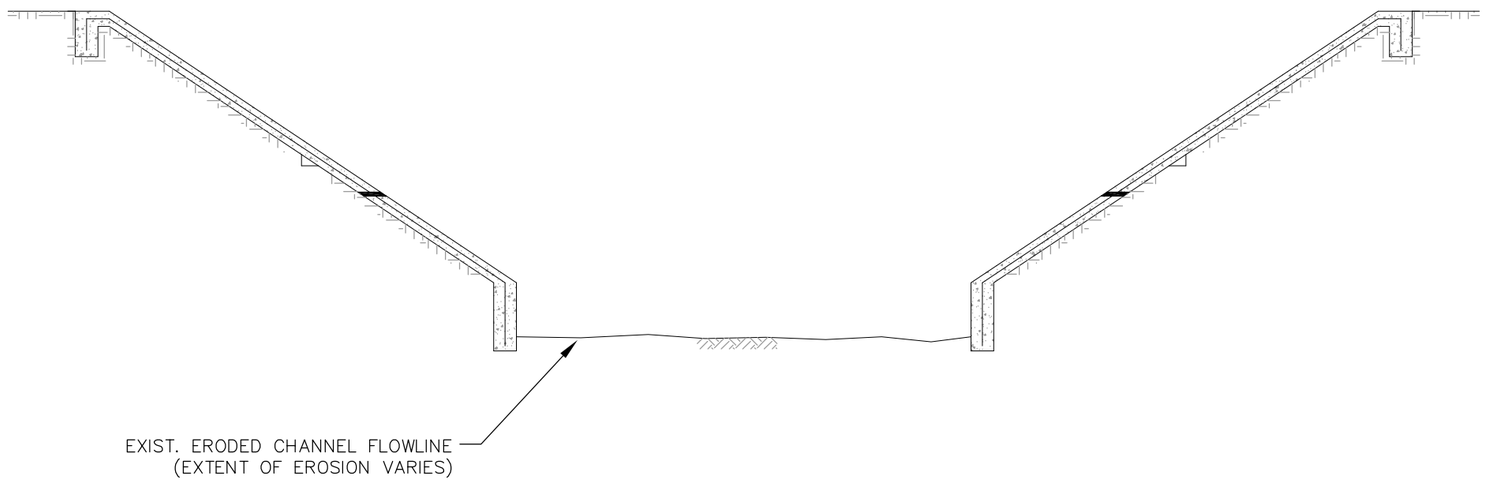

EXISTING BURTON CREEK CHANNEL

SCALE: 1"=10'

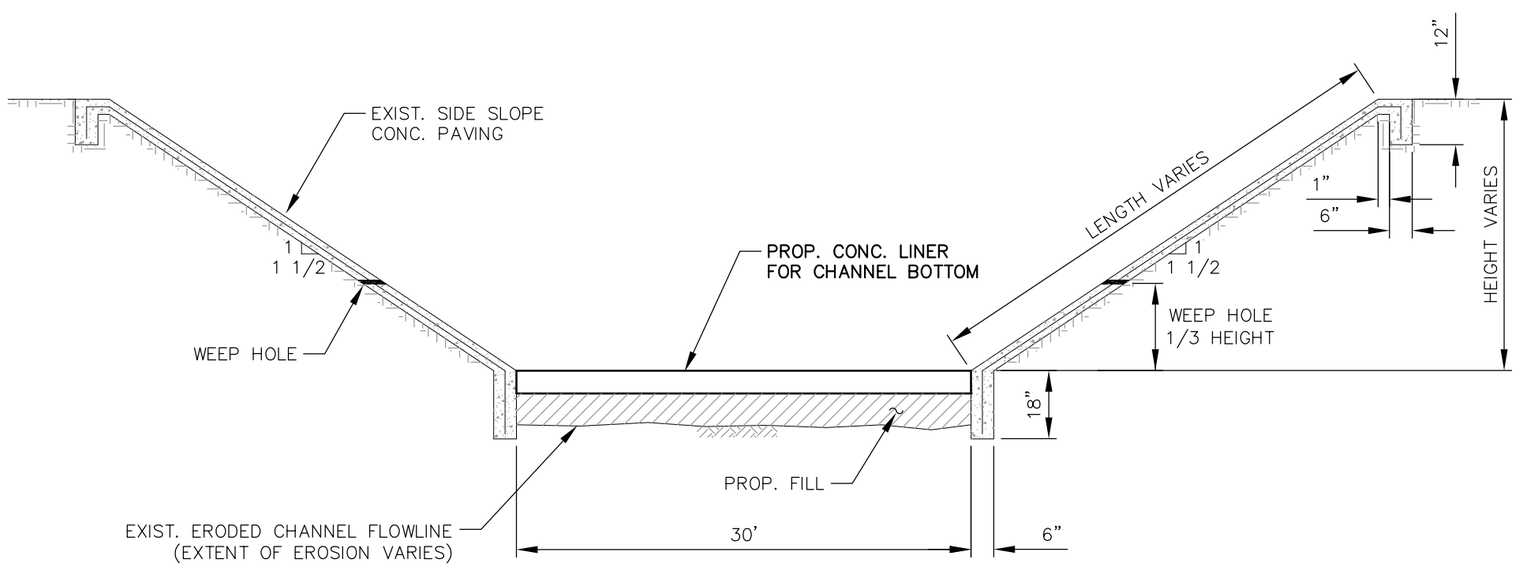

BURTON CREEK CHANNEL LINER
REPAIR PROFILE

SCALE: 1"=10'

CITY OF BRYAN
BURTON CREEK

KLOTZ ASSOCIATES, INC.
CONSULTING ENGINEERS

CONCRETE LINER REPAIR
(29TH ST. TO ROSEMARY)

PROJ. NO. 31205	EXHIBIT
SCALE: 1"=10'	8
DATE: 8/02	

J:\31205\CADD\EXHIBITS\CONC_LINER_CHANNEL.DWG