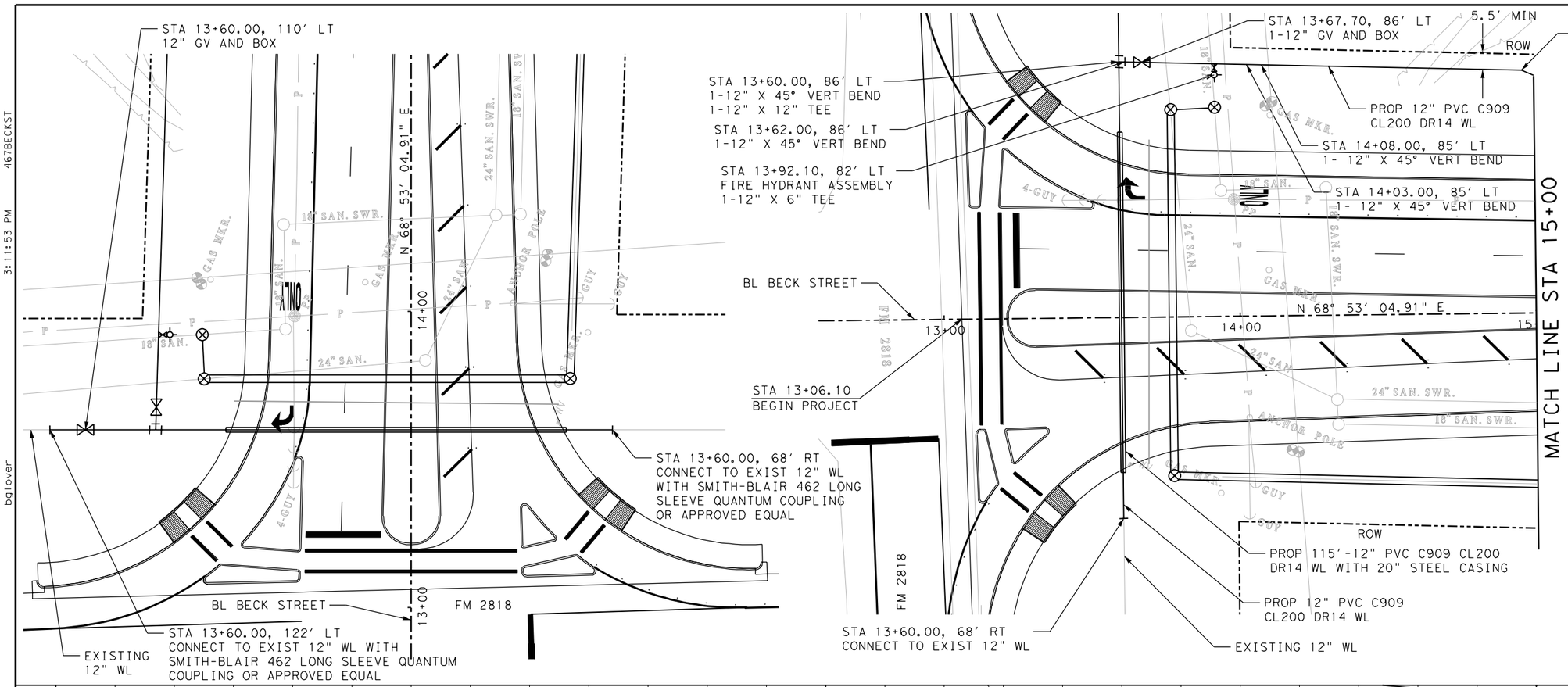

LEGEND

- DITCH FLOW LINE
- FENCE
- UTILITY POLE
- NEW WATER METER
- TELEPHONE CABLE PEDESTAL
- PROPOSED WATER VALVE
- EXISTING WATER VALVE
- PROPOSED SAN SWR MANHOLE
- EXISTING SAN SWR MANHOLE
- PROPOSED FIRE HYDRANT
- WL WATERLINE

NOTE:

1. LOCATIONS OF EXISTING UTILITIES ARE APPROXIMATE ONLY. CONTRACTOR SHALL FIELD VERIFY PRIOR TO CONSTRUCTION.

0 20 40

SCALE: H, 1"= 40' V, 1'=4'

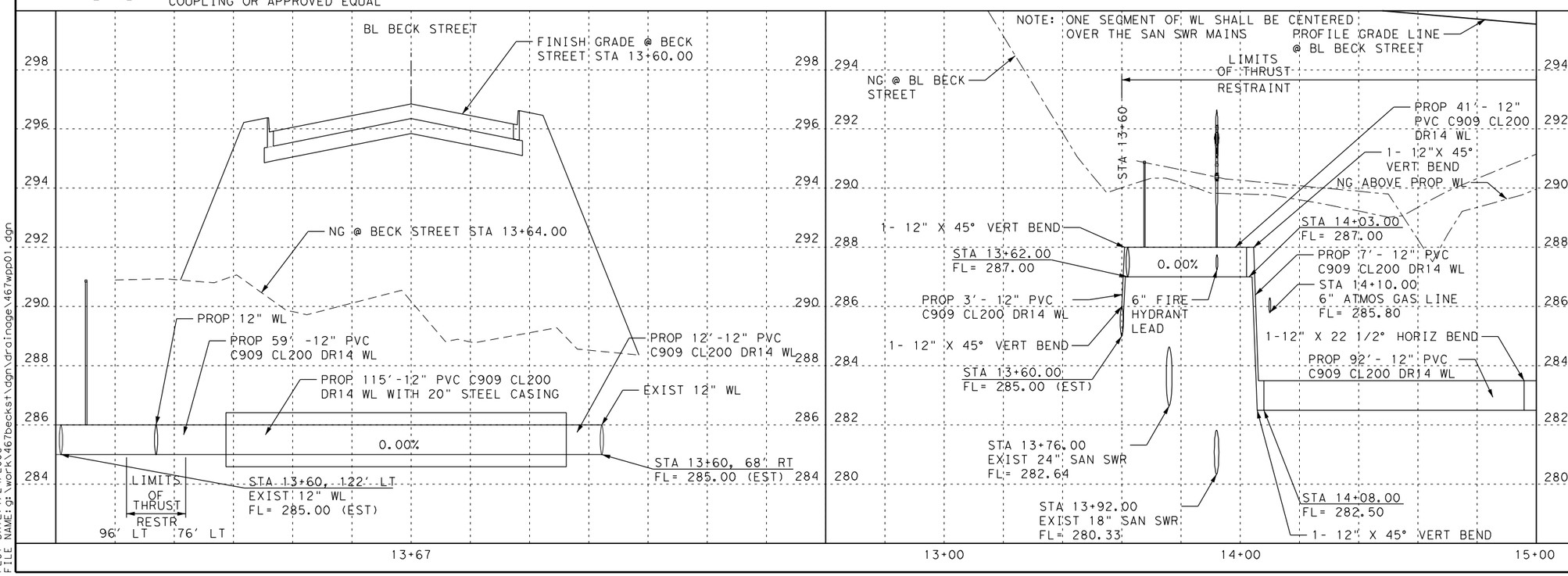

STATE OF TEXAS
MICHAEL A. MARTIN
63282
REGISTERED PROFESSIONAL ENGINEER

THE SEAL APPEARING ON THIS DOCUMENT WAS AUTHORIZED BY MICHAEL A. MARTIN, P.E. 63282 ON 1/23/2006

Epsilon Engineering, Inc.
526 E. UNIVERSITY, 201A / COLLEGE STATION, TEXAS 77840
(979) 764-9119 / eei@epsilonengr.com

CITY OF BRYAN
ENGINEERING
SERVICES

BECK STREET

BECK STREET WATERLINE PLAN & PROFILE STA 10+00 TO STA 15+00

SHEET 1 OF 15

DESIGN:	MAM	DATE:	SHEET NO.
DESIGN CK:	MAM	1/24/2006	279
DRAWN:	BAG		
DRAW CK:	MAM		

467BECKST
3:11:53 PM
bglover
PLOT DATE: 1/24/2006
FILE NAME: g:\work\467becks\dgn\drainage\467wpp01.dgn

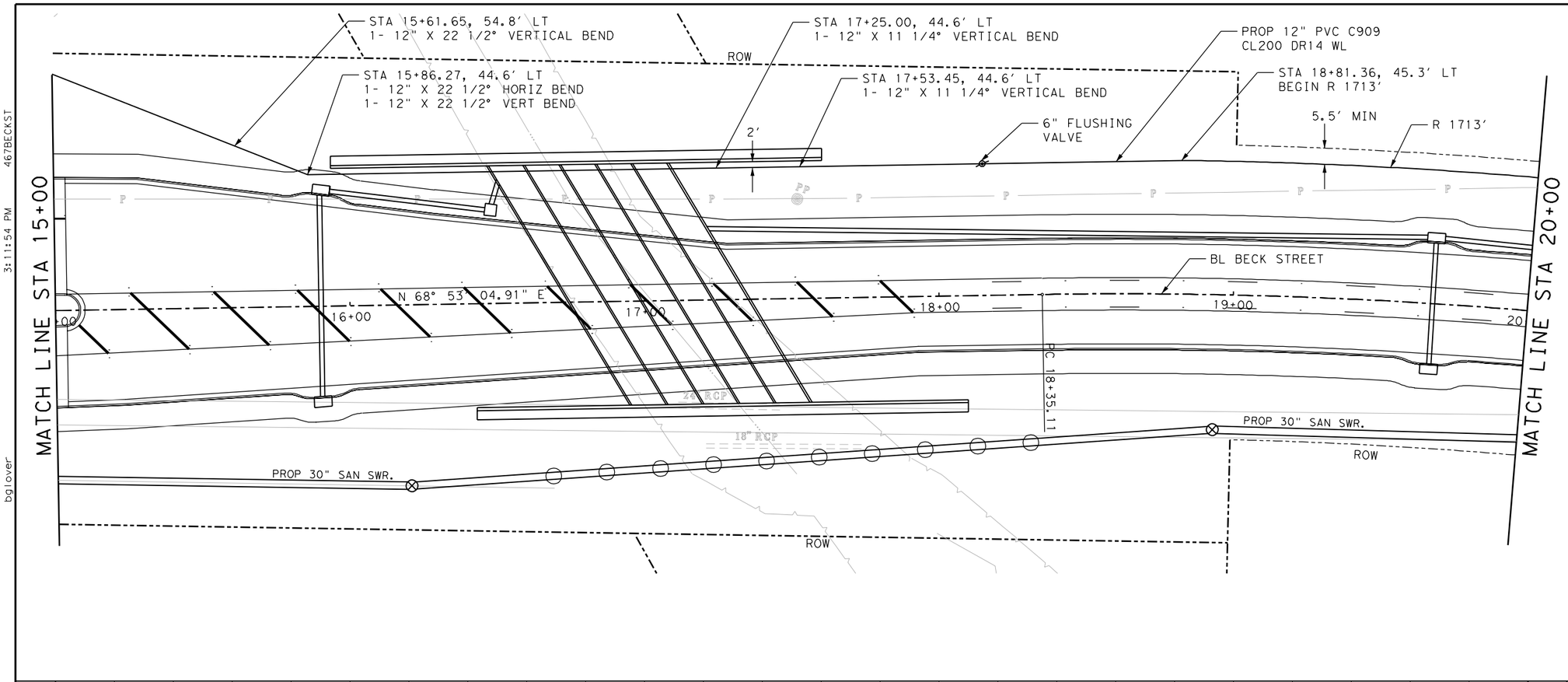

LEGEND

- DITCH FLOW LINE
- FENCE
- UTILITY POLE
- NEW WATER METER
- TELEPHONE CABLE PEDESTAL
- PROPOSED WATER VALVE
- EXISTING WATER VALVE
- PROPOSED SAN SWR MANHOLE
- EXISTING SAN SWR MANHOLE
- PROPOSED FIRE HYDRANT
- WL WATERLINE

NOTE:

1. LOCATIONS OF EXISTING UTILITIES ARE APPROXIMATE ONLY. CONTRACTOR SHALL FIELD VERIFY PRIOR TO CONSTRUCTION.

0 20 40

SCALE: H,1"= 40' V,1'=4'

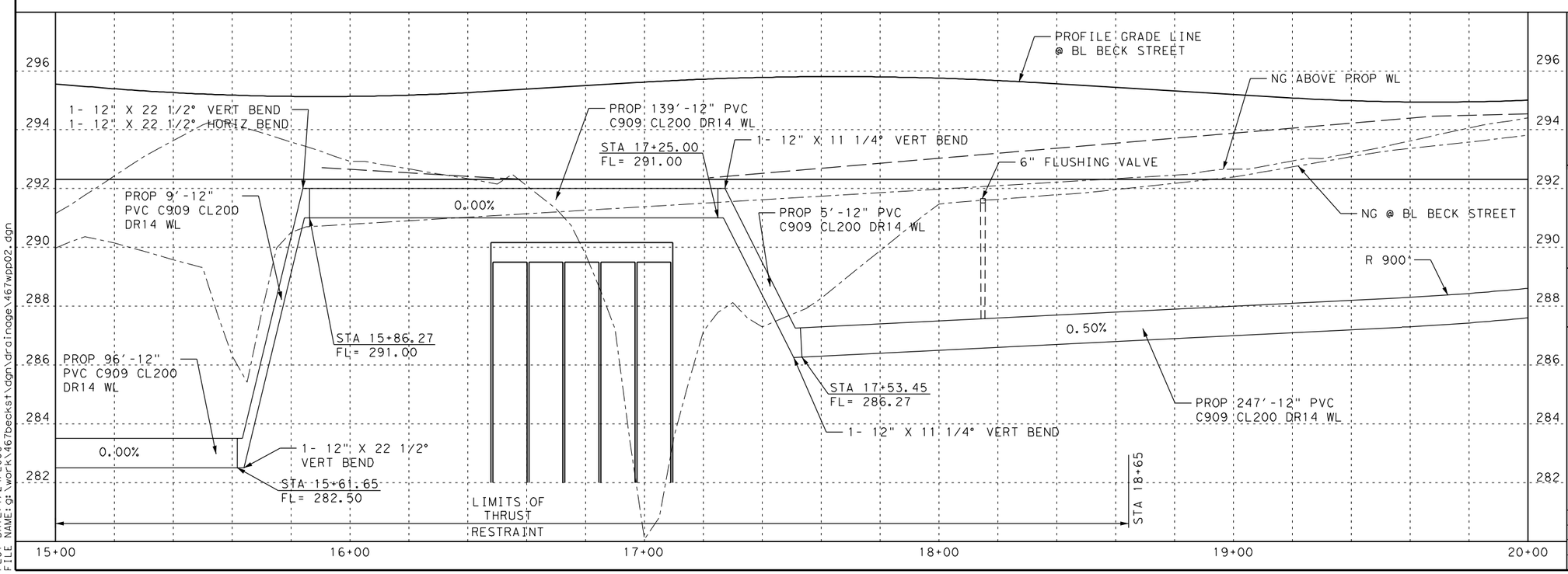

STATE OF TEXAS
MICHAEL A. MARTIN
63282
REGISTERED PROFESSIONAL ENGINEER

THE SEAL APPEARING ON THIS DOCUMENT WAS AUTHORIZED BY MICHAEL A. MARTIN, P.E. 63282 ON 1/23/2006

Epsilon Engineering, Inc.
526 E. UNIVERSITY, 201A / COLLEGE STATION, TEXAS 77840
(979) 764-9119 / eei@epsilonengr.com

CITY OF BRYAN
ENGINEERING
SERVICES

BECK STREET

BECK STREET WATERLINE PLAN & PROFILE STA 15+00 TO STA 20+00

SHEET 2 OF 15

DESIGN:	MAM	DATE:	SHEET NO.
DESIGN CK:	MAM	1/24/2006	280
DRAWN:	BAG		
DRAW CK:	MAM		

467BECKST
3:11:54 PM
bglover
PLOT DATE: 1/24/2006
FILE NAME: g:\work\467becks1\dgn\drainage\467wpb02.dgn

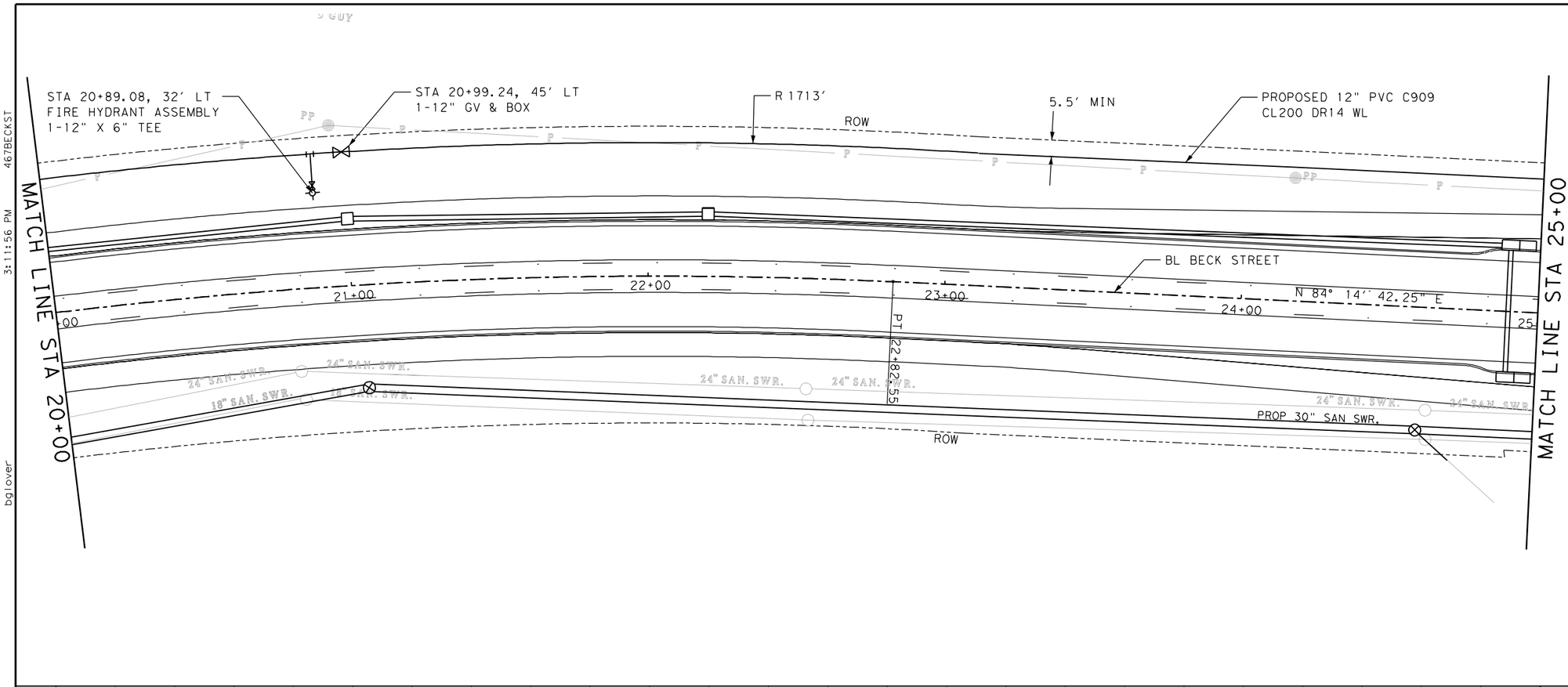

LEGEND

- DITCH FLOW LINE
- FENCE
- UTILITY POLE
- NEW WATER METER
- TELEPHONE CABLE PEDESTAL
- PROPOSED WATER VALVE
- EXISTING WATER VALVE
- PROPOSED SAN SWR MANHOLE
- EXISTING SAN SWR MANHOLE
- PROPOSED FIRE HYDRANT
- WL WATERLINE

NOTE:

1. LOCATIONS OF EXISTING UTILITIES ARE APPROXIMATE ONLY. CONTRACTOR SHALL FIELD VERIFY PRIOR TO CONSTRUCTION.

0 20 40

SCALE: H, 1" = 40' V, 1' = 4'

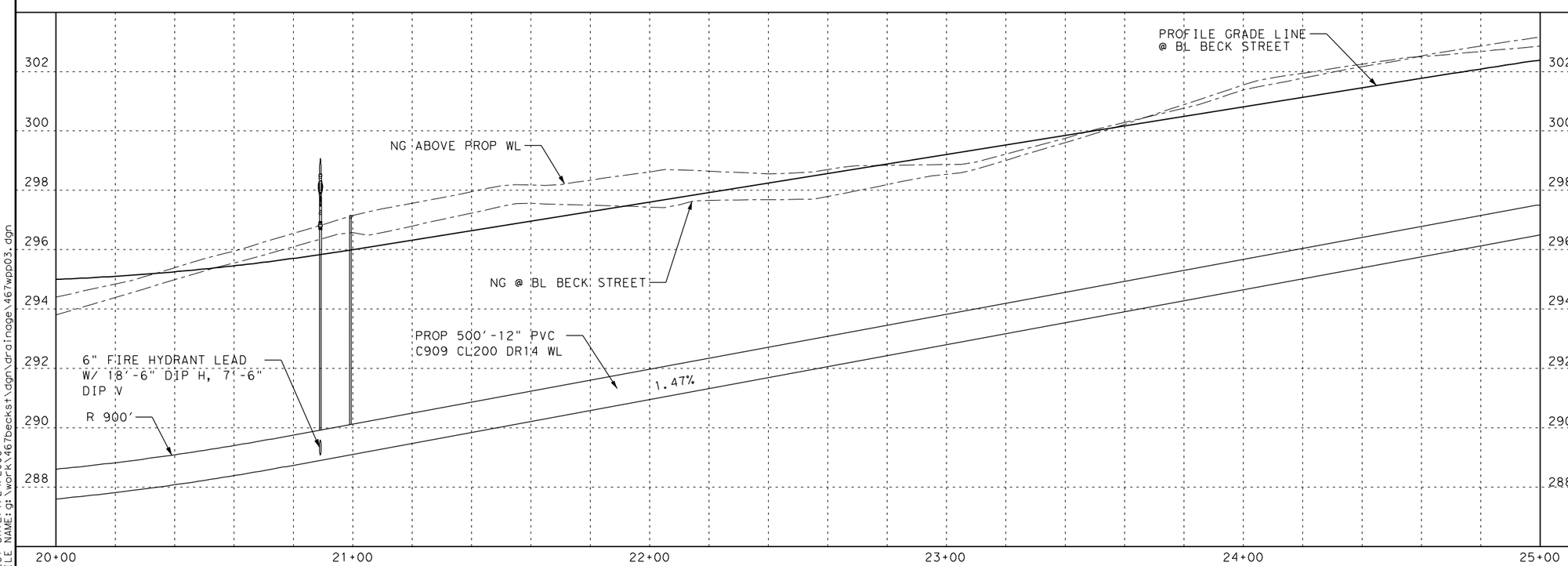

THE SEAL APPEARING ON THIS DOCUMENT WAS AUTHORIZED BY MICHAEL A. MARTIN, P.E. 63282 ON 1/23/2006

Epsilon Engineering, Inc.
526 E. UNIVERSITY, 201A / COLLEGE STATION, TEXAS 77840
(979) 764-9119 / eei@epsilonengr.com

CITY OF BRYAN ENGINEERING SERVICES

BECK STREET

BECK STREET WATERLINE PLAN & PROFILE STA 20+00 TO STA 25+00

SHEET 3 OF 15

DESIGN:	MAM	DATE:	SHEET NO.
DESIGN CK:	MAM	1/24/2006	281
DRAWN:	BAG		
DRAW CK:	MAM		

PLOT DATE: 1/24/2006
FILE NAME: g:\work\467becks1\dgn\drainage\467wpp03.dgn
bglover
3:11:56 PM
467BECKST

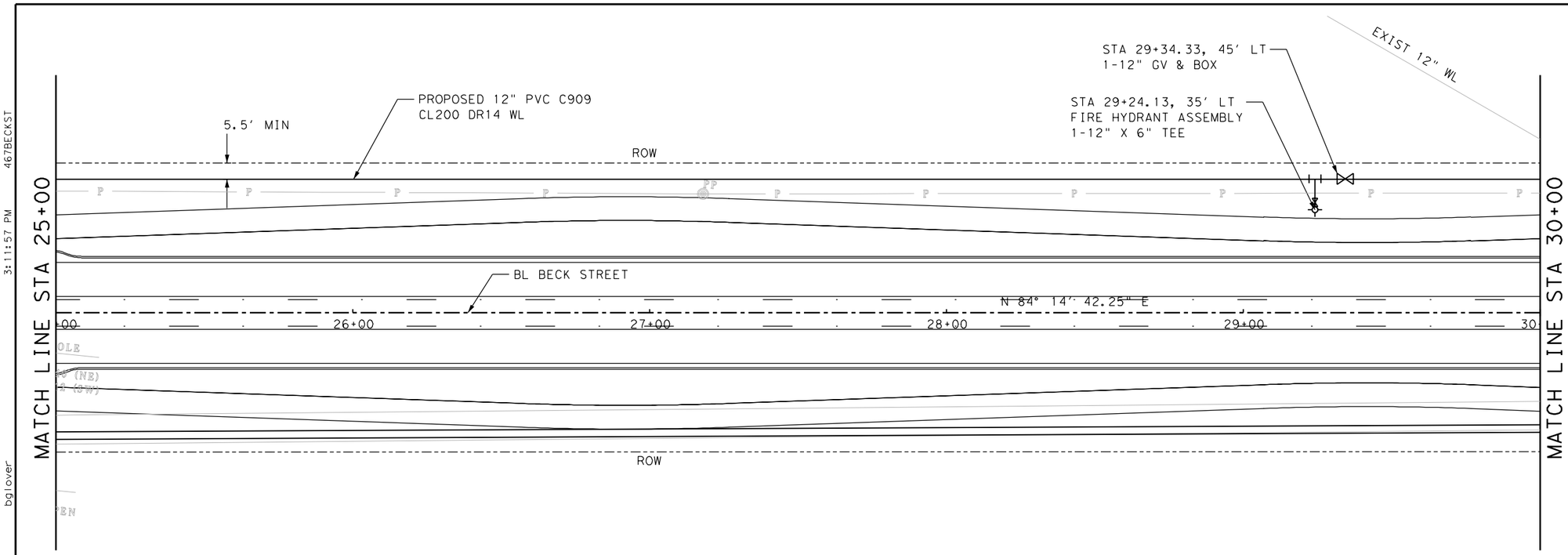

LEGEND

- DITCH FLOW LINE
- FENCE
- UTILITY POLE
- NEW WATER METER
- TELEPHONE CABLE PEDESTAL
- PROPOSED WATER VALVE
- EXISTING WATER VALVE
- PROPOSED SAN SWR MANHOLE
- EXISTING SAN SWR MANHOLE
- PROPOSED FIRE HYDRANT
- WL WATERLINE

NOTE:

1. LOCATIONS OF EXISTING UTILITIES ARE APPROXIMATE ONLY. CONTRACTOR SHALL FIELD VERIFY PRIOR TO CONSTRUCTION.

0 20 40

SCALE: H,1"= 40' V,1'=4'

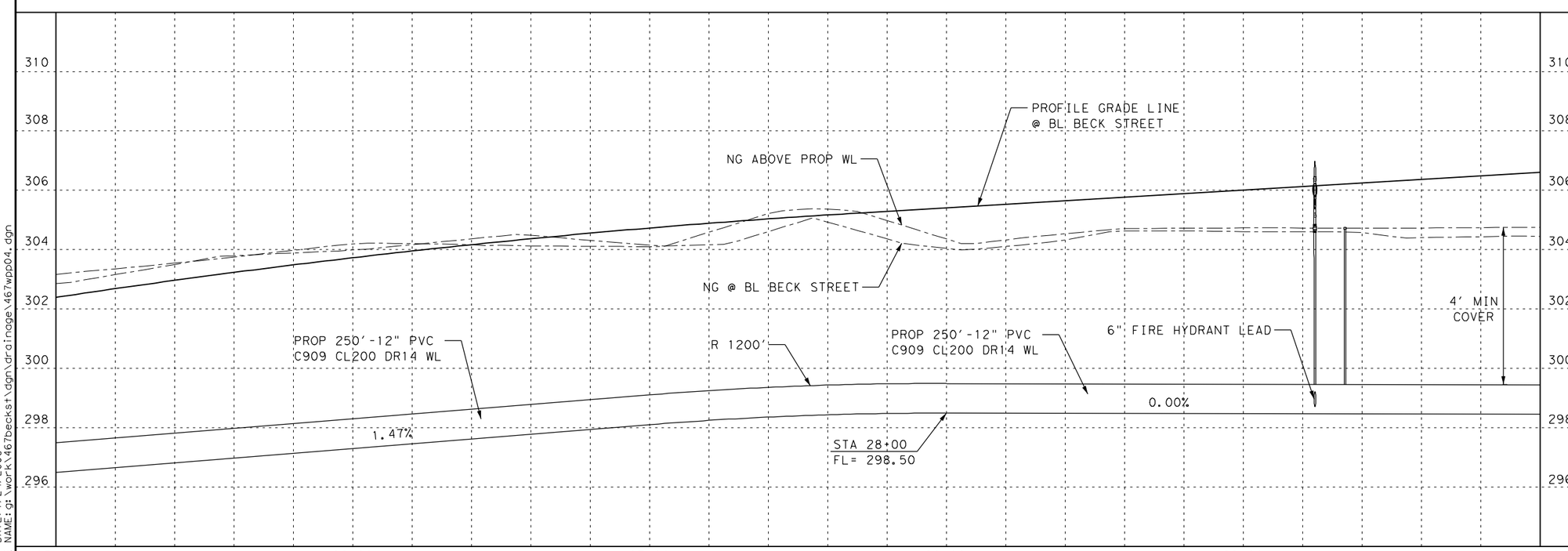

THE SEAL APPEARING ON THIS DOCUMENT WAS AUTHORIZED BY MICHAEL A. MARTIN, P.E. 63282 ON 1/23/2006

Epsilon Engineering, Inc.
526 E. UNIVERSITY, 201A / COLLEGE STATION, TEXAS 77840
(979) 764-9119 / eei@epsilonengr.com

CITY OF BRYAN ENGINEERING SERVICES

BECK STREET

BECK STREET WATERLINE PLAN & PROFILE STA 25+00 TO STA 30+00

SHEET 4 OF 15

DESIGN:	MAM	DATE:	SHEET NO.
DESIGN CK:	MAM	1/24/2006	282
DRAWN:	BAG		
DRAW CK:	MAM		

467BECKST 3:11:57 PM bglover

PLOT DATE: 1/24/2006
FILE NAME: g:\work\467becks1\dgn\drainage\467wpp04.dgn

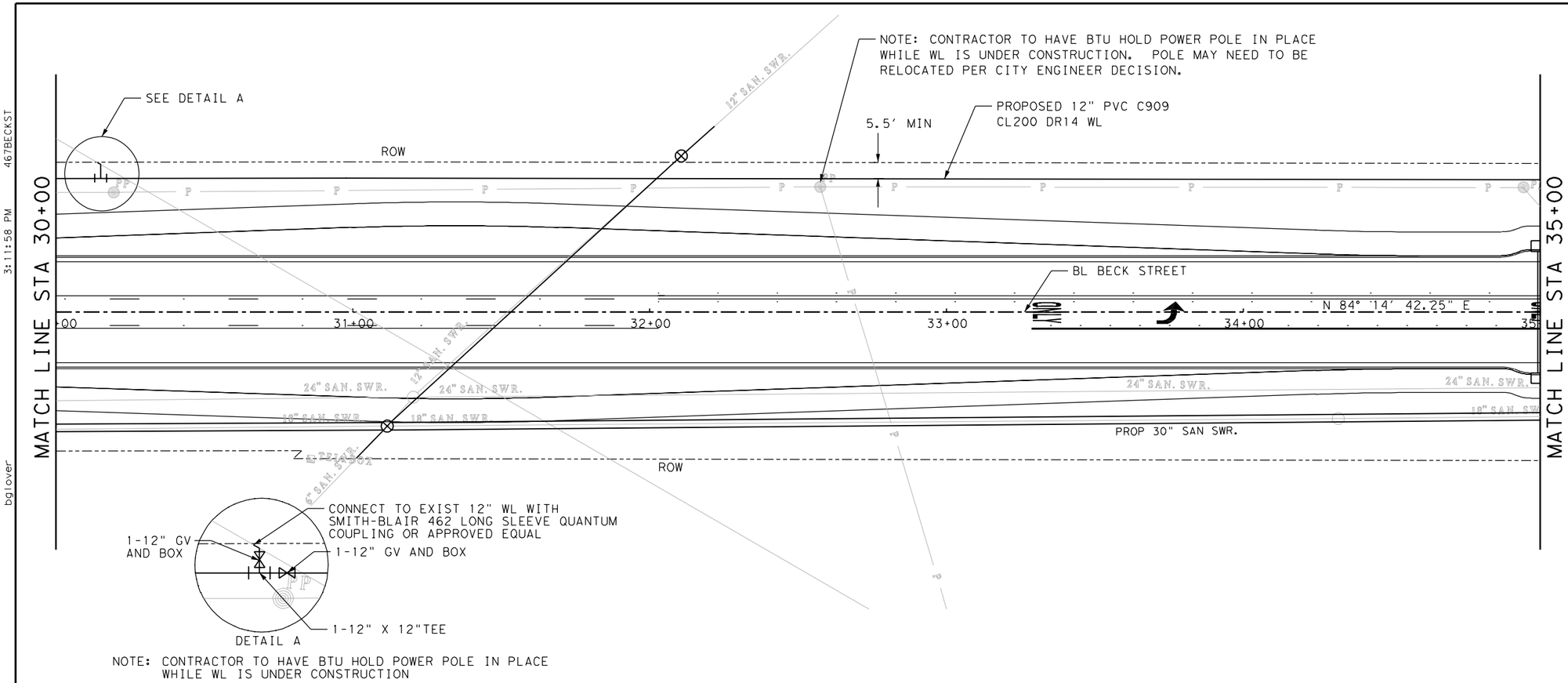

LEGEND

- DITCH FLOW LINE
- FENCE
- UTILITY POLE
- NEW WATER METER
- TELEPHONE CABLE PEDESTAL
- PROPOSED WATER VALVE
- EXISTING WATER VALVE
- PROPOSED SAN SWR MANHOLE
- EXISTING SAN SWR MANHOLE
- PROPOSED FIRE HYDRANT
- WL WATERLINE

NOTE:

1. LOCATIONS OF EXISTING UTILITIES ARE APPROXIMATE ONLY. CONTRACTOR SHALL FIELD VERIFY PRIOR TO CONSTRUCTION.

0 20 40

SCALE: H, 1"= 40' V, 1'=4'

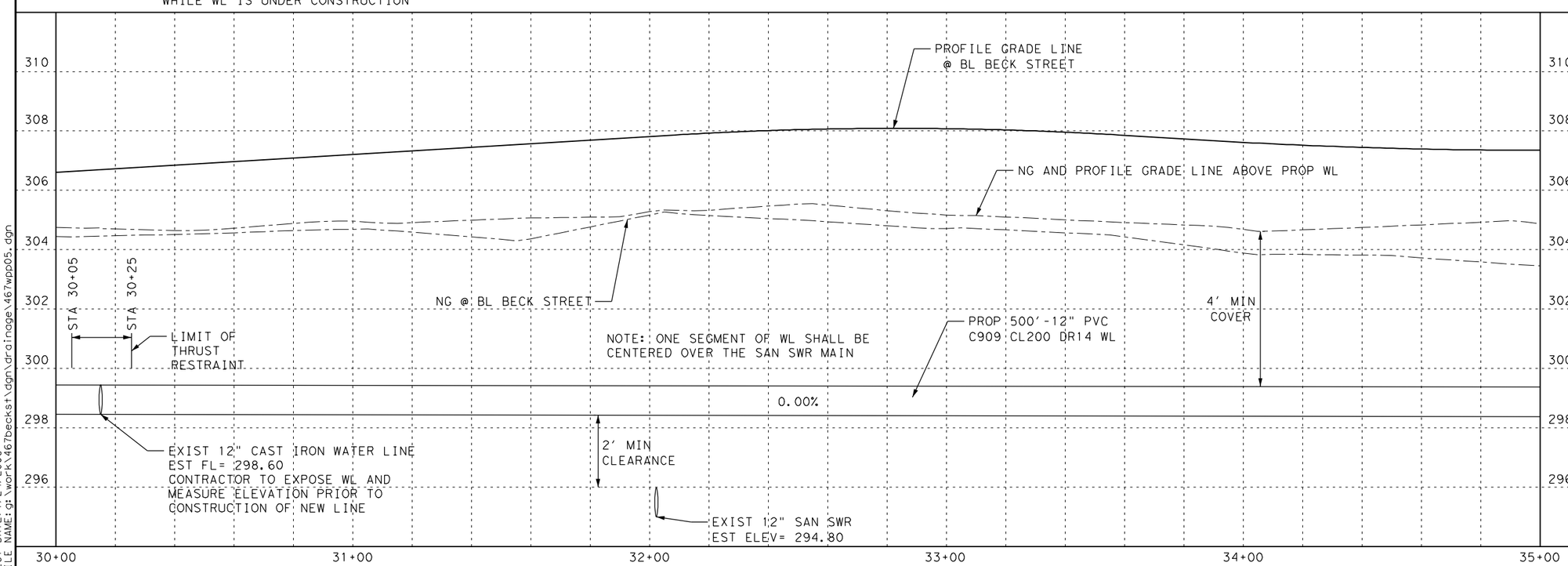

STATE OF TEXAS
MICHAEL A. MARTIN
63282
REGISTERED PROFESSIONAL ENGINEER

THE SEAL APPEARING ON THIS DOCUMENT WAS AUTHORIZED BY MICHAEL A. MARTIN, P.E. 63282 ON 1/23/2006

Epsilon Engineering, Inc.
526 E. UNIVERSITY, 201A / COLLEGE STATION, TEXAS 77840
(979) 764-9119 / eei@epsilonengr.com

CITY OF BRYAN ENGINEERING SERVICES

BECK STREET

BECK STREET WATERLINE PLAN & PROFILE STA 30+00 TO STA 35+00

SHEET 5 OF 15

DESIGN:	MAM	DATE:	SHEET NO.
DESIGN CK:	MAM	1/24/2006	283
DRAWN:	BAG		
DRAW CK:	MAM		

467BECKST 3:11:58 PM bglover

PLOT DATE: 1/24/2006
FILE NAME: g:\work\467becks1\dgn\drainage\467wpp05.dgn

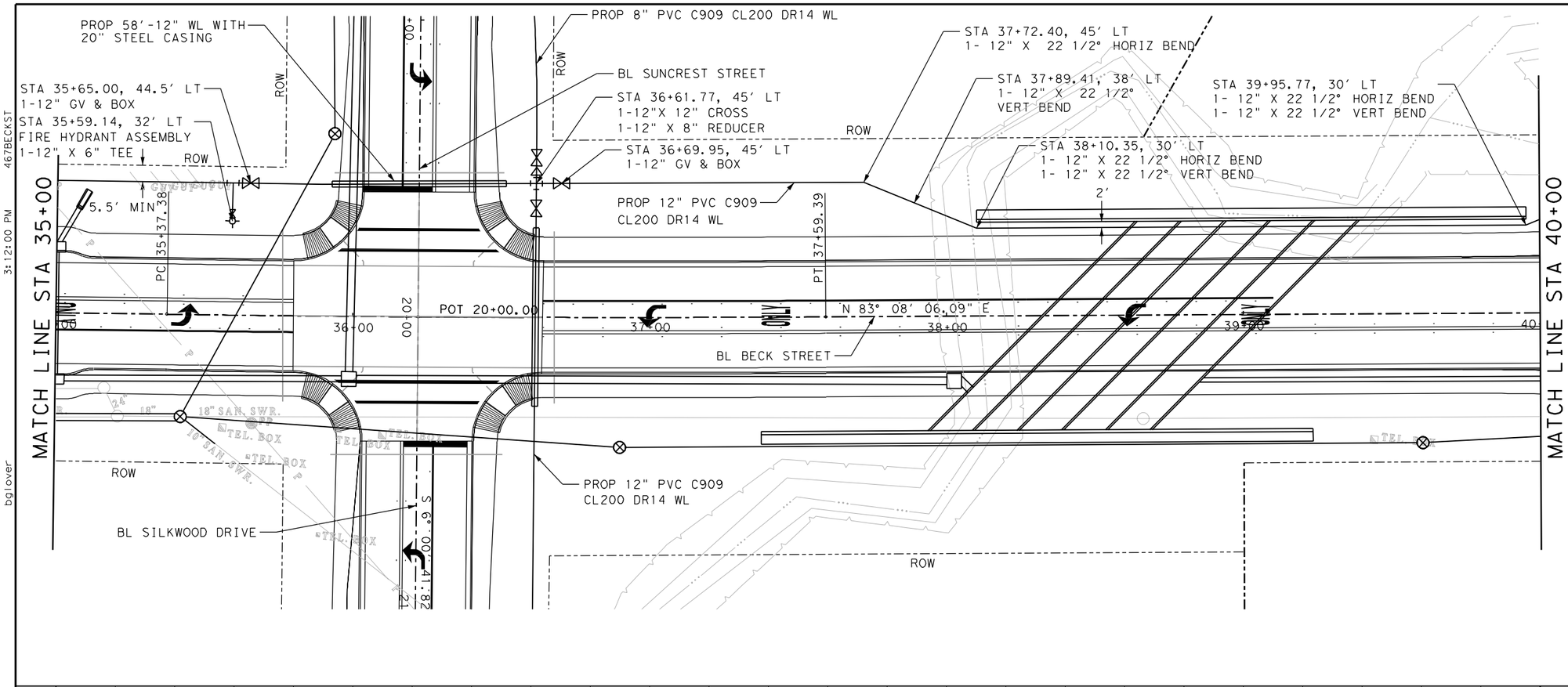

LEGEND

- DITCH FLOW LINE
- FENCE
- UTILITY POLE
- NEW WATER METER
- TELEPHONE CABLE PEDESTAL
- PROPOSED WATER VALVE
- EXISTING WATER VALVE
- PROPOSED SAN SWR MANHOLE
- EXISTING SAN SWR MANHOLE
- PROPOSED FIRE HYDRANT
- WL WATERLINE

NOTE:

1. LOCATIONS OF EXISTING UTILITIES ARE APPROXIMATE ONLY. CONTRACTOR SHALL FIELD VERIFY PRIOR TO CONSTRUCTION.

0 20 40

SCALE: H,1"= 40' V,1'=4'

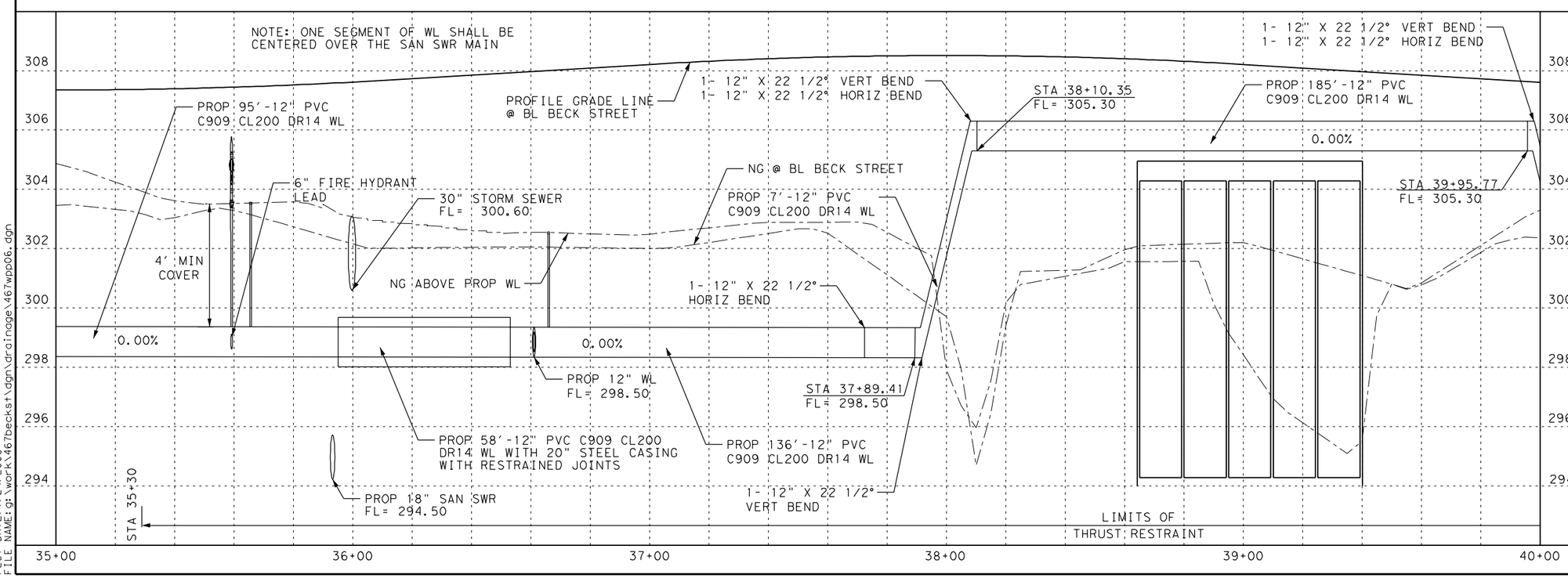

THE SEAL APPEARING ON THIS DOCUMENT WAS AUTHORIZED BY MICHAEL A. MARTIN, P.E. 63282 ON 1/23/2006

Epsilon Engineering, Inc.
526 E. UNIVERSITY, 201A / COLLEGE STATION, TEXAS 77840
(979) 764-9119 / eei@epsilonengr.com

CITY OF BRYAN ENGINEERING SERVICES

BECK STREET

BECK STREET WATERLINE PLAN & PROFILE STA 35+00 TO STA 40+00

SHEET 6 OF 15

DESIGN:	MAM	DATE:	SHEET NO.
DESIGN CK:	MAM	1/24/2006	284
DRAWN:	BAG		
DRAW CK:	MAM		

467BECKST 3:12:00 PM bglover

PLOT DATE: 1/24/2006
FILE NAME: g:\work\467becks1\dgn\drainage\467wpb06.dgn

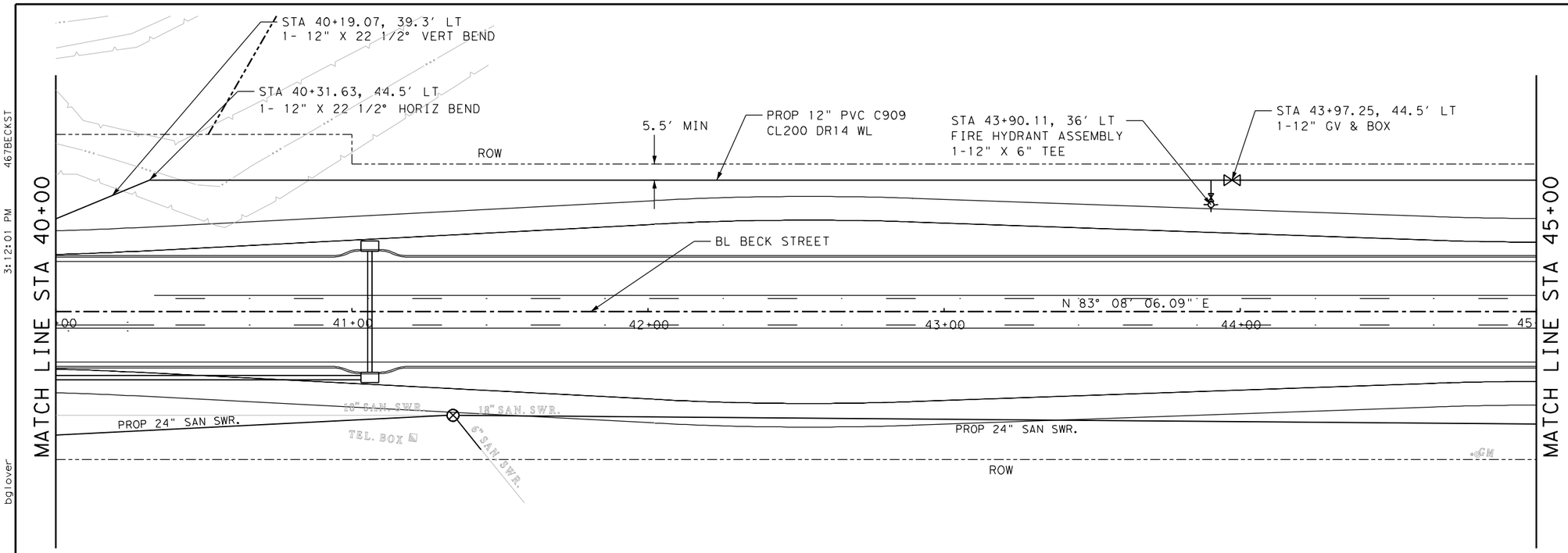

LEGEND

- DITCH FLOW LINE
- FENCE
- UTILITY POLE
- NEW WATER METER
- TELEPHONE CABLE PEDESTAL
- PROPOSED WATER VALVE
- EXISTING WATER VALVE
- PROPOSED SAN SWR MANHOLE
- EXISTING SAN SWR MANHOLE
- PROPOSED FIRE HYDRANT
- WL WATERLINE

NOTE:

1. LOCATIONS OF EXISTING UTILITIES ARE APPROXIMATE ONLY. CONTRACTOR SHALL FIELD VERIFY PRIOR TO CONSTRUCTION.

0 20 40

SCALE: H, 1" = 40' V, 1' = 4'

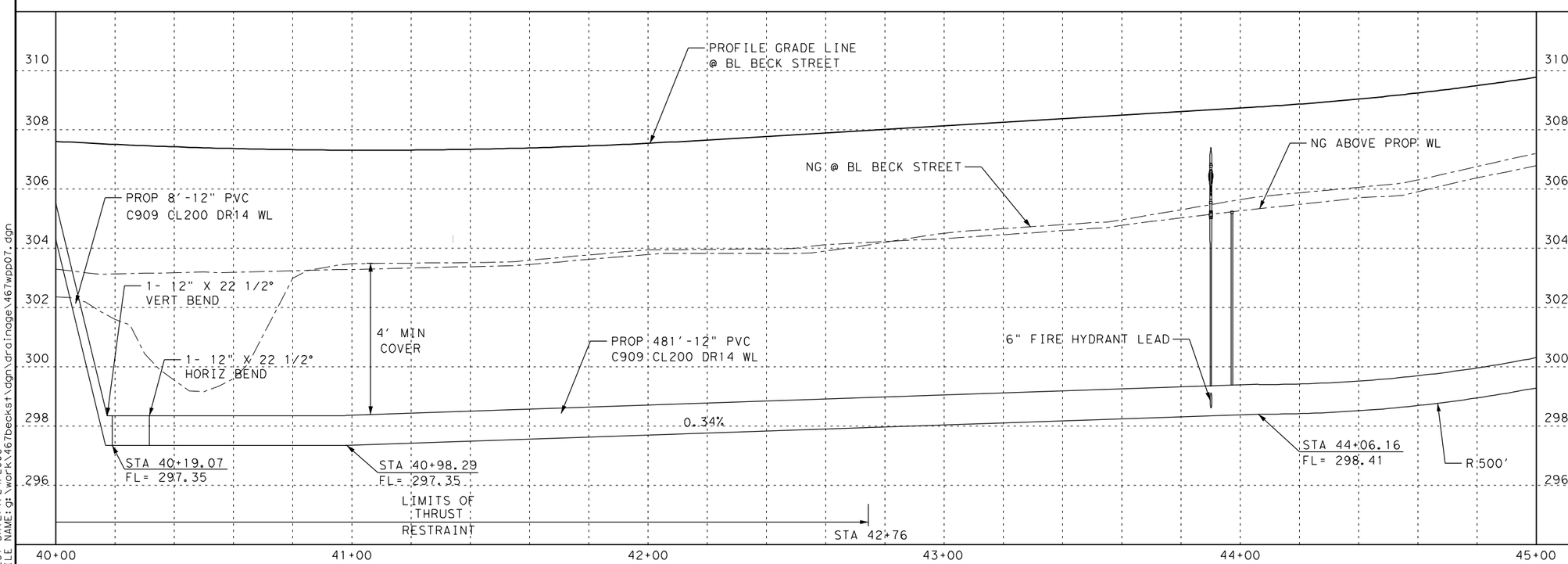

STATE OF TEXAS
MICHAEL A. MARTIN
63282
REGISTERED
PROFESSIONAL ENGINEER

THE SEAL APPEARING ON THIS DOCUMENT WAS AUTHORIZED BY MICHAEL A. MARTIN, P.E. 63282 ON 1/23/2006

Epsilon Engineering, Inc.
526 E. UNIVERSITY, 201A / COLLEGE STATION, TEXAS 77840
(979) 764-9119 / eei@epsilonengr.com

CITY OF BRYAN
ENGINEERING
SERVICES

BECK STREET

BECK STREET WATERLINE PLAN & PROFILE STA 40+00 TO STA 45+00

SHEET 7 OF 15

DESIGN:	MAM	DATE:	SHEET NO.
DESIGN CK:	MAM	1/24/2006	285
DRAWN:	BAG		
DRAW CK:	MAM		

467BECKST
3:12:01 PM
bglover
PLOT DATE: 1/24/2006
FILE NAME: g:\work\467becks1\dgn\drainage\467wpp07.dgn

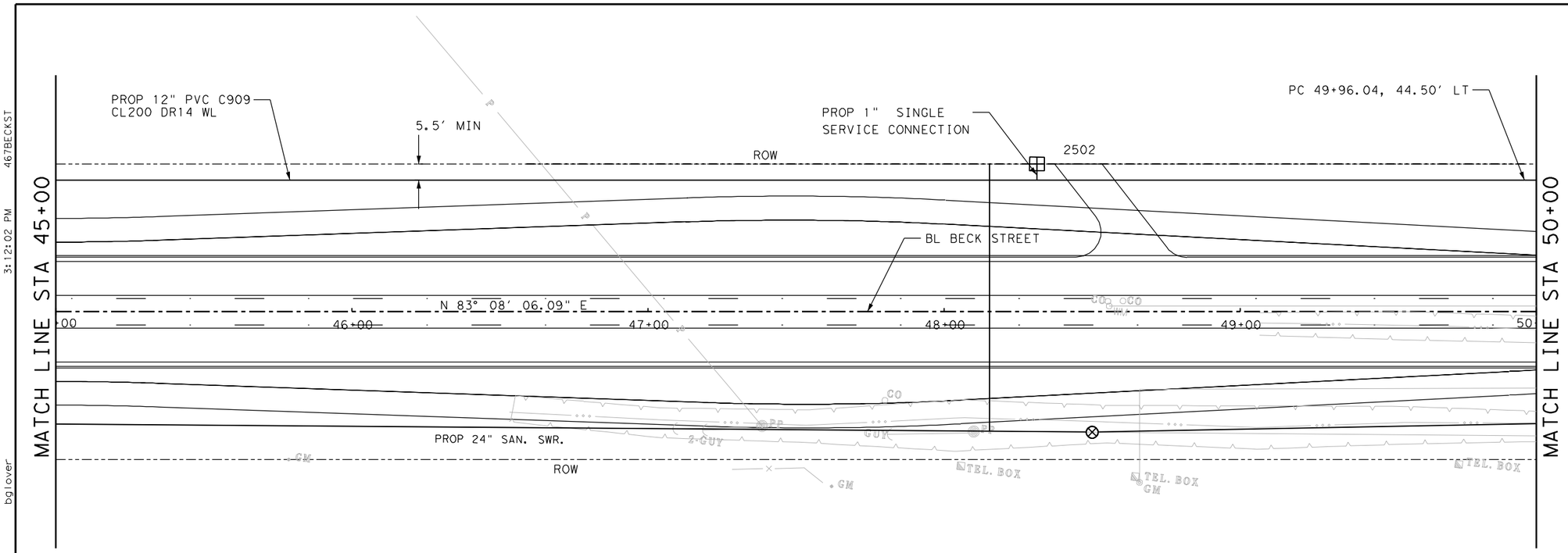

LEGEND

- DITCH FLOW LINE
- FENCE
- UTILITY POLE
- NEW WATER METER
- TELEPHONE CABLE PEDESTAL
- PROPOSED WATER VALVE
- EXISTING WATER VALVE
- PROPOSED SAN SWR MANHOLE
- EXISTING SAN SWR MANHOLE
- PROPOSED FIRE HYDRANT
- WL WATERLINE

NOTE:

1. LOCATIONS OF EXISTING UTILITIES ARE APPROXIMATE ONLY. CONTRACTOR SHALL FIELD VERIFY PRIOR TO CONSTRUCTION.

0 20 40

SCALE: H, 1" = 40' V, 1' = 4'

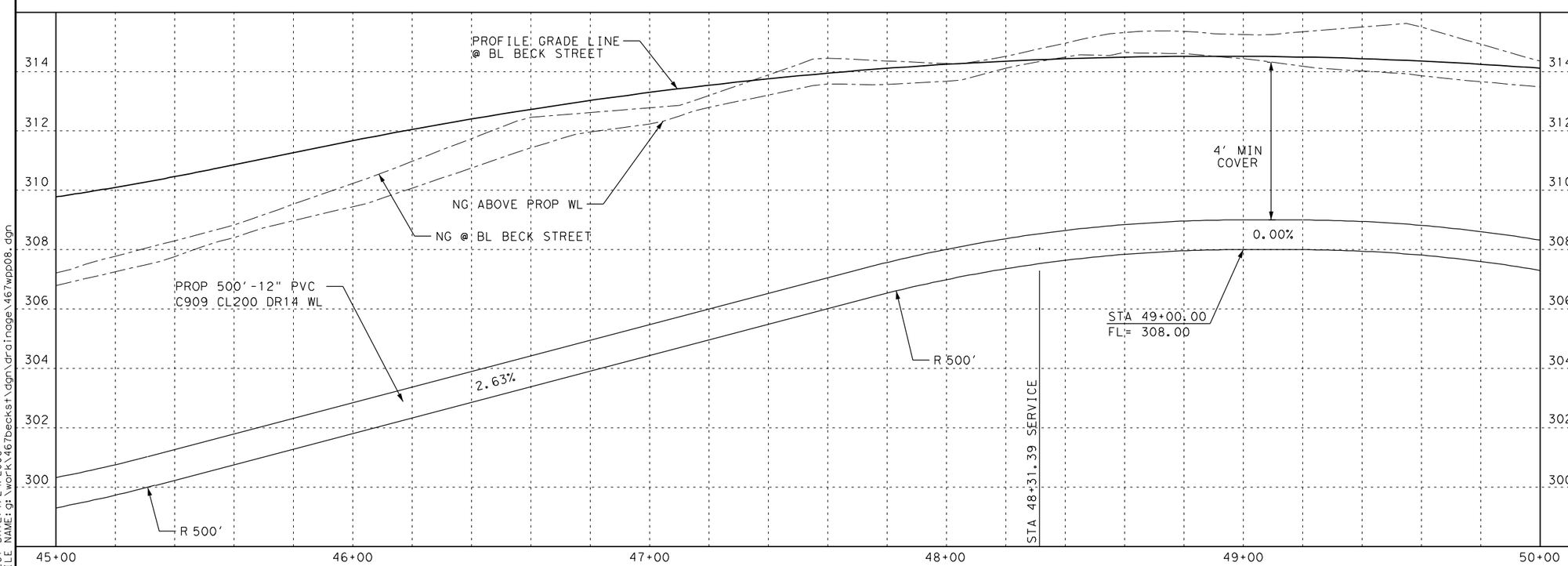

THE SEAL APPEARING ON THIS DOCUMENT WAS AUTHORIZED BY MICHAEL A. MARTIN, P.E. 63282 ON 1/23/2006

Epsilon Engineering, Inc.
526 E. UNIVERSITY, 201A / COLLEGE STATION, TEXAS 77840
(979) 764-9119 / eei@epsilonengr.com

CITY OF BRYAN ENGINEERING SERVICES

BECK STREET

BECK STREET WATERLINE PLAN & PROFILE STA 45+00 TO STA 50+00

SHEET 8 OF 15

DESIGN:	MAM	DATE:	SHEET NO.
DESIGN CK:	MAM	1/24/2006	286
DRAWN:	BAG		
DRAW CK:	MAM		

467BECKST 3:12:02 PM bglover

PLOT DATE: 1/24/2006
FILE NAME: g:\work\467becks1\dgn\drainage\467wpp08.dgn

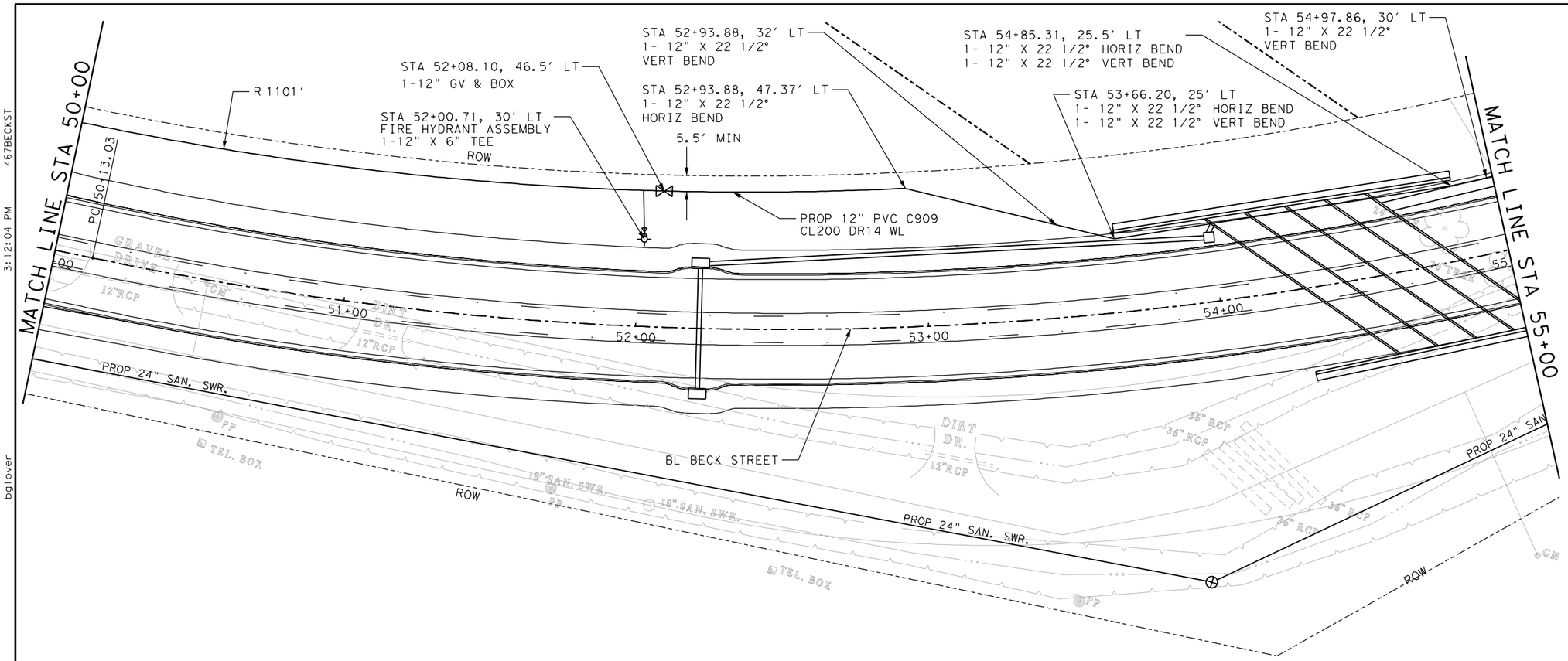

LEGEND

- DITCH FLOW LINE
- FENCE
- UTILITY POLE
- NEW WATER METER
- TELEPHONE CABLE PEDESTAL
- PROPOSED WATER VALVE
- EXISTING WATER VALVE
- PROPOSED SAN SWR MANHOLE
- EXISTING SAN SWR MANHOLE
- PROPOSED FIRE HYDRANT
- WL WATERLINE

NOTE:

1. LOCATIONS OF EXISTING UTILITIES ARE APPROXIMATE ONLY. CONTRACTOR SHALL FIELD VERIFY PRIOR TO CONSTRUCTION.

0 20 40

SCALE: H, 1" = 40' V, 1' = 4'

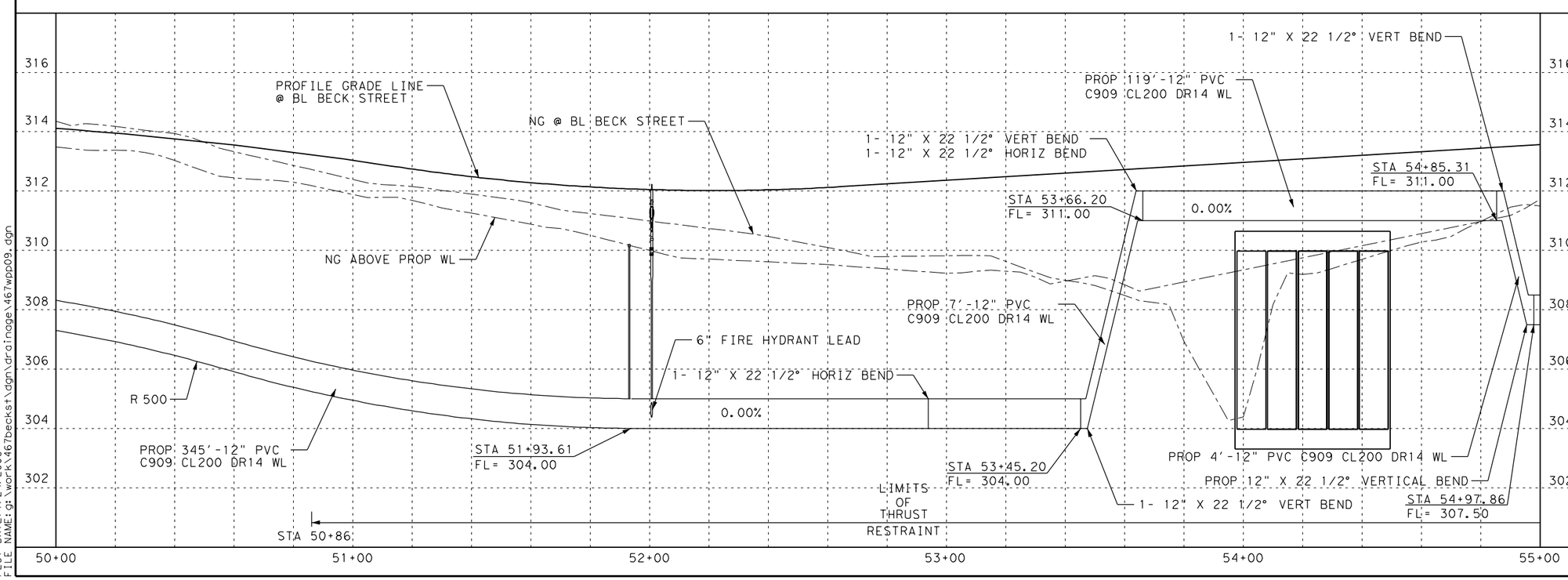

STATE OF TEXAS
MICHAEL A. MARTIN
63282
REGISTERED PROFESSIONAL ENGINEER

THE SEAL APPEARING ON THIS DOCUMENT WAS AUTHORIZED BY MICHAEL A. MARTIN, P.E. 63282 ON 1/23/2006

Epsilon Engineering, Inc.
526 E. UNIVERSITY, 201A / COLLEGE STATION, TEXAS 77840
(979) 764-9119 / eei@epsilonengr.com

CITY OF BRYAN ENGINEERING SERVICES

BECK STREET

BECK STREET WATERLINE PLAN & PROFILE STA 50+00 TO STA 55+00

SHEET 9 OF 15

DESIGN:	MAM	DATE:	SHEET NO.
DESIGN CK:	MAM	1/24/2006	287
DRAWN:	BAG		
DRAW CK:	MAM		

467BECKST
3:12:04 PM
bglover
PLOT DATE: 1/24/2006
FILE NAME: g:\work\467becks1\dgn\drainage\467wpp09.dgn

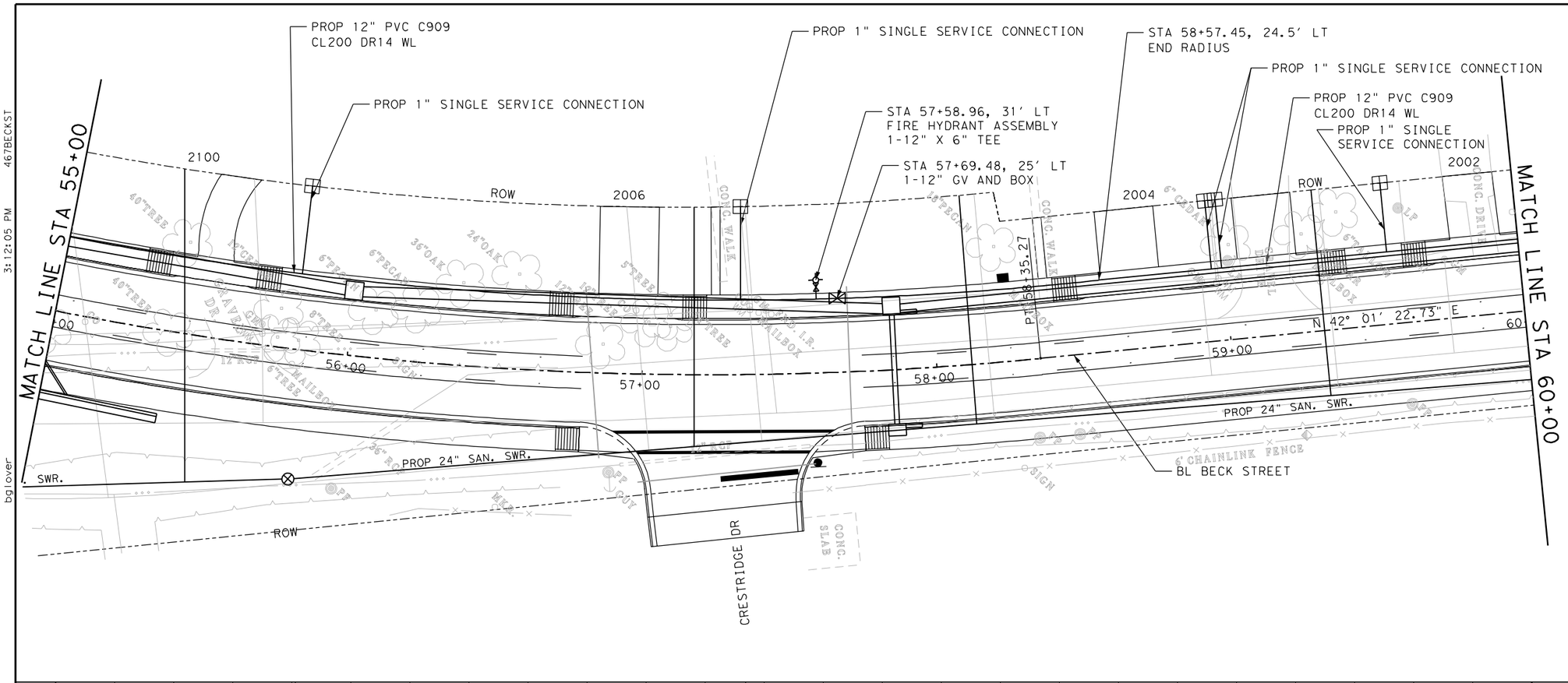

LEGEND

- DITCH FLOW LINE
- FENCE
- UTILITY POLE
- NEW WATER METER
- TELEPHONE CABLE PEDESTAL
- PROPOSED WATER VALVE
- EXISTING WATER VALVE
- PROPOSED SAN SWR MANHOLE
- EXISTING SAN SWR MANHOLE
- PROPOSED FIRE HYDRANT
- WL WATERLINE

NOTE:

1. LOCATIONS OF EXISTING UTILITIES ARE APPROXIMATE ONLY. CONTRACTOR SHALL FIELD VERIFY PRIOR TO CONSTRUCTION.

0 20 40

SCALE: H, 1"= 40' V, 1'=4'

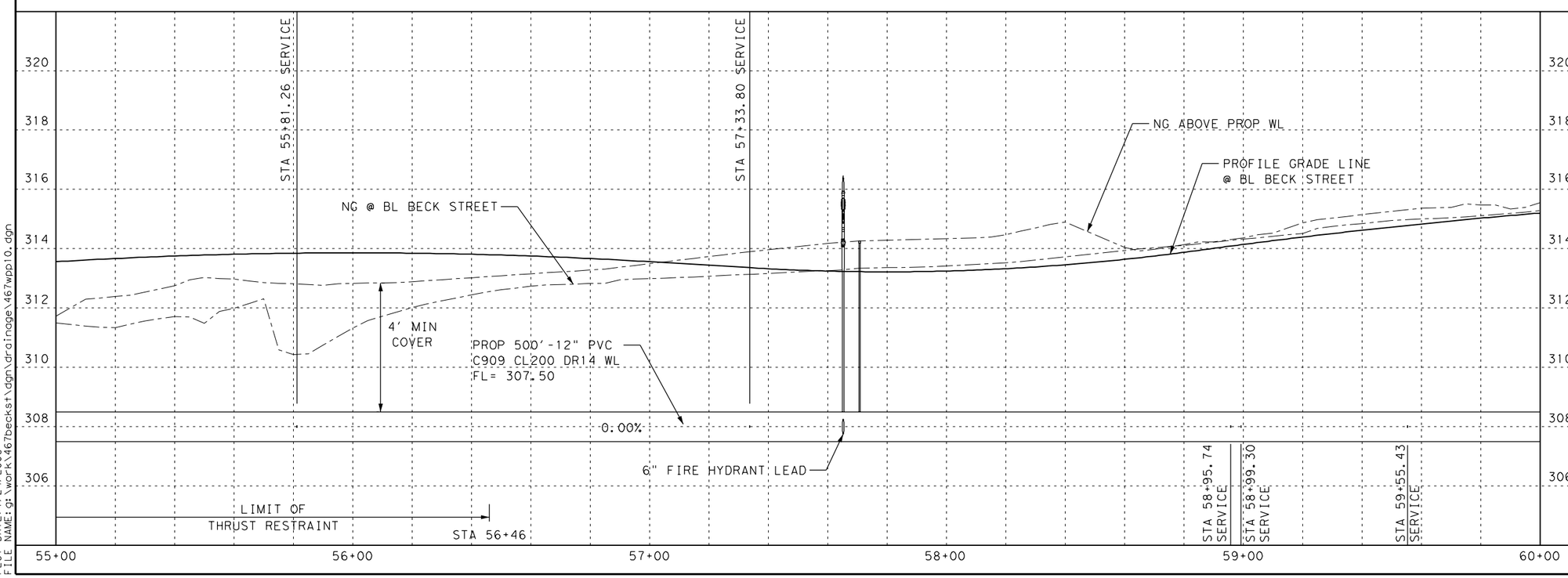

STATE OF TEXAS
MICHAEL A. MARTIN
63282
REGISTERED
PROFESSIONAL ENGINEER

THE SEAL APPEARING ON THIS DOCUMENT WAS AUTHORIZED BY MICHAEL A. MARTIN, P.E. 63282 ON 1/23/2006

Epsilon Engineering, Inc.
526 E. UNIVERSITY, 201A / COLLEGE STATION, TEXAS 77840
(979) 764-9119 / eei@epsilonengr.com

CITY OF BRYAN ENGINEERING SERVICES

BECK STREET

BECK STREET WATERLINE PLAN & PROFILE STA 55+00 TO STA 60+00

SHEET 10 OF 15

DESIGN:	MAM	DATE:	SHEET NO.
DESIGN CK:	MAM	1/24/2006	288
DRAWN:	BAG		
DRAW CK:	MAM		

PLOT DATE: 1/24/2006
FILE NAME: g:\work\467becks\dgn\drainage\467wpp10.dgn
bglover 3:12:05 PM 467BECKST

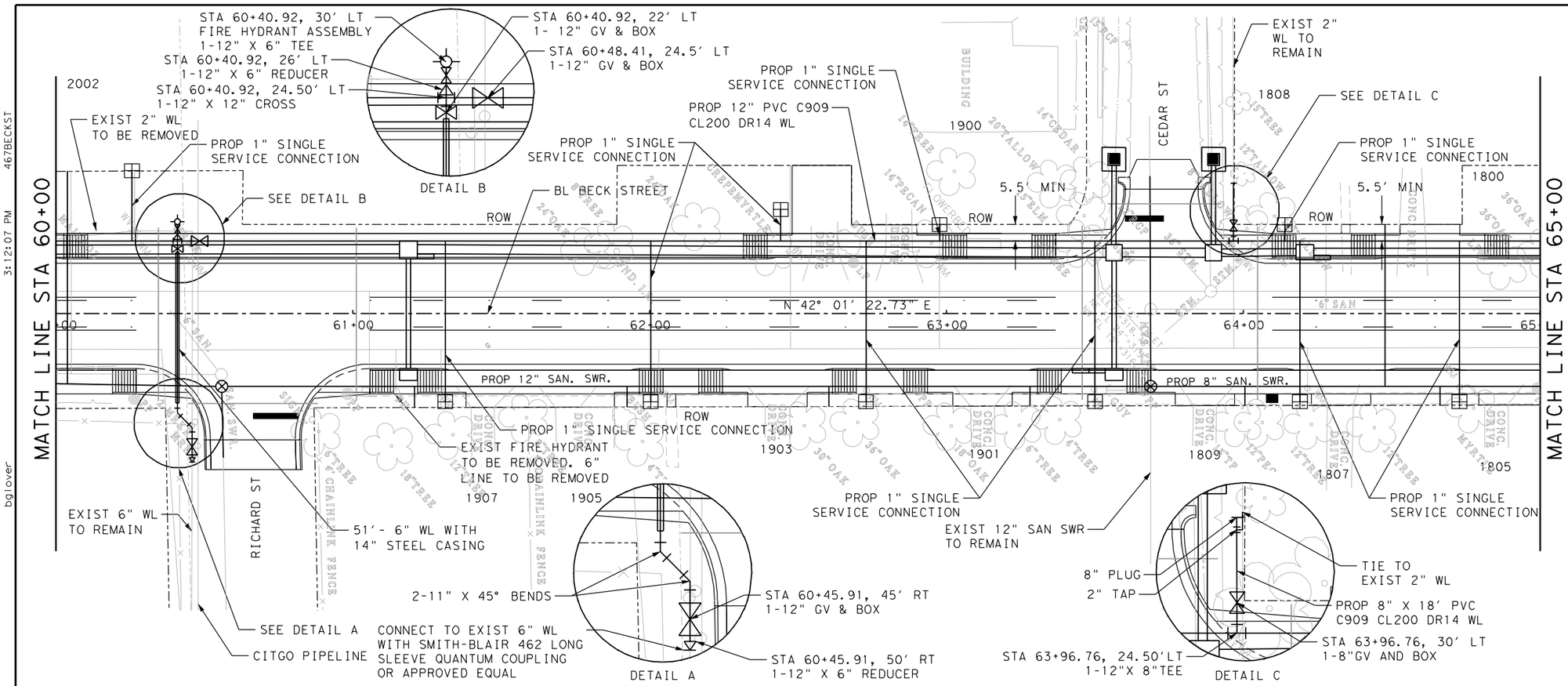

LEGEND

- DITCH FLOW LINE
- FENCE
- UTILITY POLE
- NEW WATER METER
- TELEPHONE CABLE PEDESTAL
- PROPOSED WATER VALVE
- EXISTING WATER VALVE
- PROPOSED SAN SWR MANHOLE
- EXISTING SAN SWR MANHOLE
- PROPOSED FIRE HYDRANT
- WL WATERLINE

NOTE:

1. LOCATIONS OF EXISTING UTILITIES ARE APPROXIMATE ONLY. CONTRACTOR SHALL FIELD VERIFY PRIOR TO CONSTRUCTION.

0 20 40
SCALE: H,1"= 40' V,1'=4'

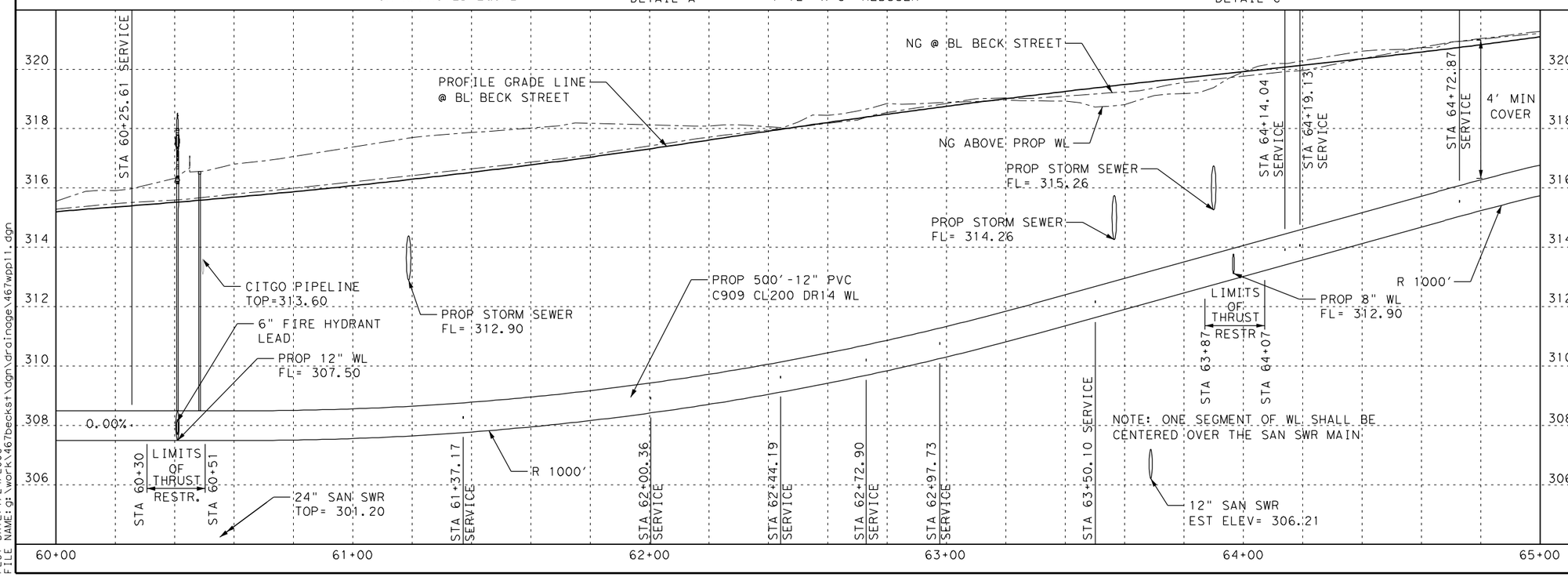

STATE OF TEXAS
MICHAEL A. MARTIN
63282
REGISTERED PROFESSIONAL ENGINEER

THE SEAL APPEARING ON THIS DOCUMENT WAS AUTHORIZED BY MICHAEL A. MARTIN, P.E. 63282 ON 1/23/2006

Epsilon Engineering, Inc.
526 E. UNIVERSITY, 201A / COLLEGE STATION, TEXAS 77840
(979) 764-9119 / eei@epsilonengr.com

CITY OF BRYAN
ENGINEERING
SERVICES

BECK STREET

BECK STREET WATERLINE PLAN & PROFILE STA 60+00 TO STA 65+00

SHEET 11 OF 15

DESIGN:	MAM	DATE:	SHEET NO.
DESIGN CK:	MAM	1/24/2006	289
DRAWN:	BAG		
DRAW CK:	MAM		

467BECKST
3:12:07 PM
bglover
PLOT DATE: 1/24/2006
FILE NAME: g:\work\467becks1\dgn\drainage\467wpp11.dgn

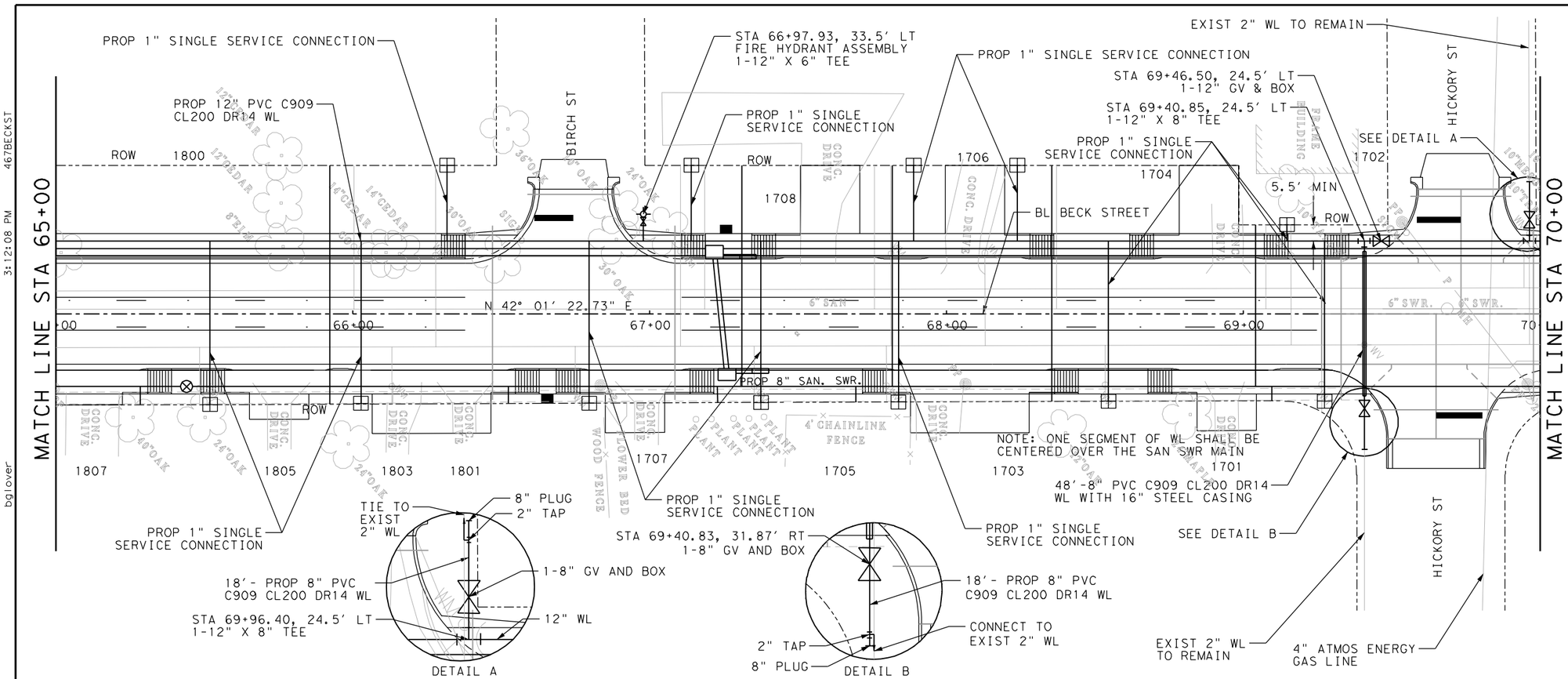

LEGEND

- DITCH FLOW LINE
- FENCE
- UTILITY POLE
- NEW WATER METER
- TELEPHONE CABLE PEDESTAL
- PROPOSED WATER VALVE
- EXISTING WATER VALVE
- PROPOSED SAN SWR MANHOLE
- EXISTING SAN SWR MANHOLE
- PROPOSED FIRE HYDRANT
- WL WATERLINE

NOTE:

1. LOCATIONS OF EXISTING UTILITIES ARE APPROXIMATE ONLY. CONTRACTOR SHALL FIELD VERIFY PRIOR TO CONSTRUCTION.

0 20 40
SCALE: H,1"= 40' V,1'=4'

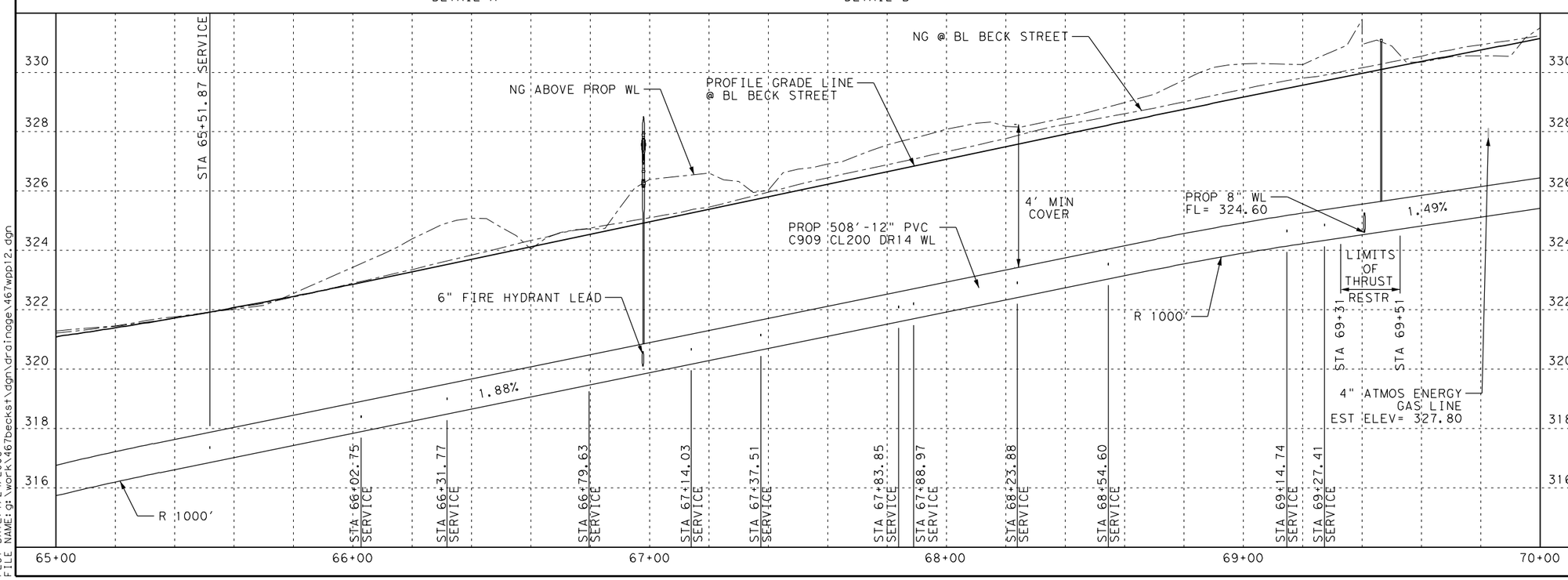

STATE OF TEXAS
MICHAEL A. MARTIN
63282
REGISTERED PROFESSIONAL ENGINEER

THE SEAL APPEARING ON THIS DOCUMENT WAS AUTHORIZED BY MICHAEL A. MARTIN, P.E. 63282 ON 1/23/2006

Epsilon Engineering, Inc.
526 E. UNIVERSITY, 201A / COLLEGE STATION, TEXAS 77840
(979) 764-9119 / eei@epsilonengr.com

CITY OF BRYAN ENGINEERING SERVICES

BECK STREET

BECK STREET WATERLINE PLAN & PROFILE STA 65+00 TO STA 70+00

SHEET 12 OF 15

DESIGN:	MAM	DATE:	SHEET NO.
DESIGN CK:	MAM	1/24/2006	290
DRAWN:	BAG		
DRAW CK:	MAM		

467BECKST
3:12:08 PM
bglover
PLOT DATE: 1/24/2006
FILE NAME: g:\work\467becks1\dgn\drainage\467wpp12.dgn

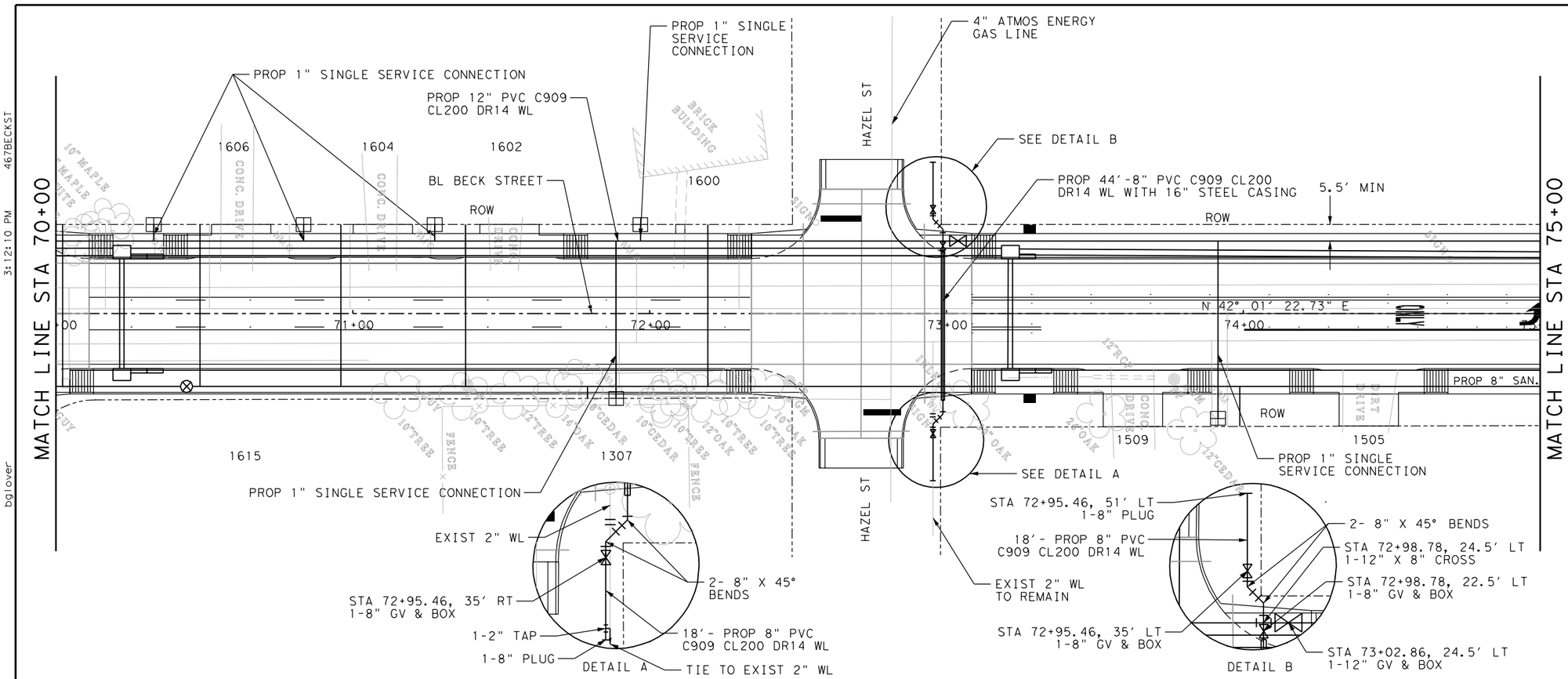

LEGEND

- DITCH FLOW LINE
- FENCE
- UTILITY POLE
- NEW WATER METER
- TELEPHONE CABLE PEDESTAL
- PROPOSED WATER VALVE
- EXISTING WATER VALVE
- PROPOSED SAN SWR MANHOLE
- EXISTING SAN SWR MANHOLE
- PROPOSED FIRE HYDRANT
- WL WATERLINE

NOTE:

1. LOCATIONS OF EXISTING UTILITIES ARE APPROXIMATE ONLY. CONTRACTOR SHALL FIELD VERIFY PRIOR TO CONSTRUCTION.

0 20 40
SCALE: H,1"= 40' V,1'=4'

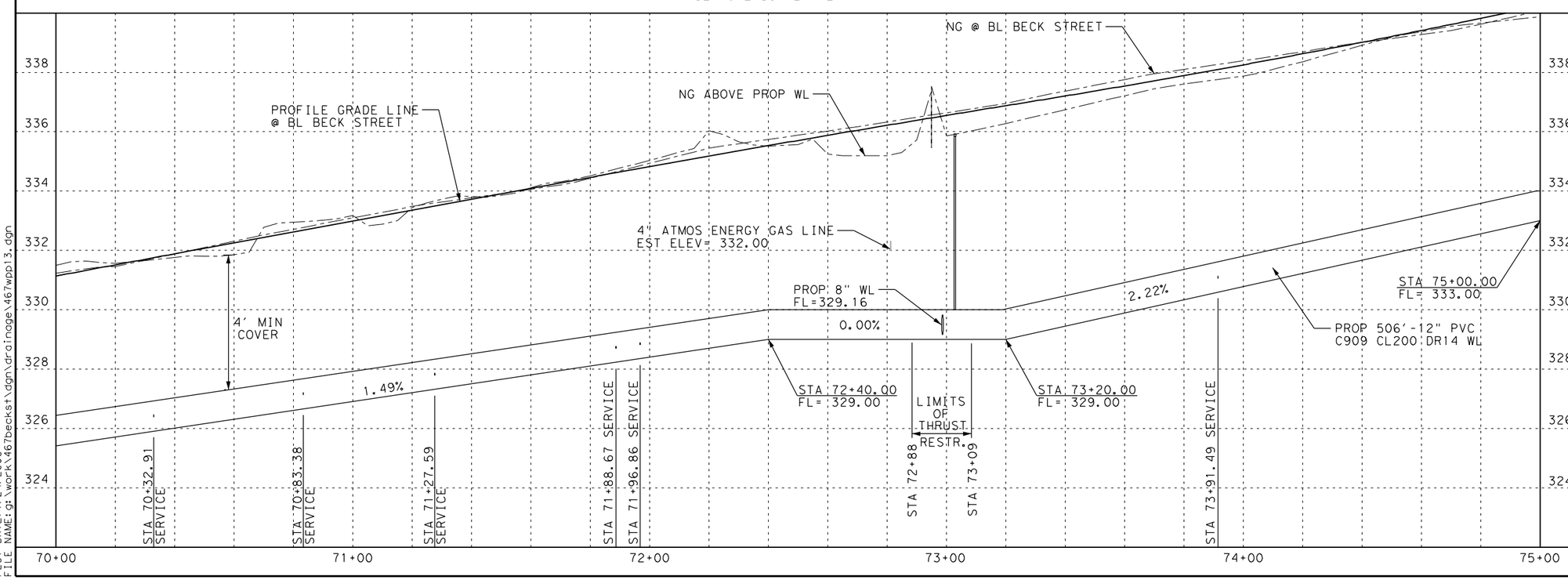

STATE OF TEXAS
MICHAEL A. MARTIN
63282
REGISTERED PROFESSIONAL ENGINEER

THE SEAL APPEARING ON THIS DOCUMENT WAS AUTHORIZED BY MICHAEL A. MARTIN, P.E. 63282 ON 1/23/2006

Epsilon Engineering, Inc.
526 E. UNIVERSITY, 201A / COLLEGE STATION, TEXAS 77840
(979) 764-9119 / eei@epsilonengr.com

CITY OF BRYAN ENGINEERING SERVICES

BECK STREET

BECK STREET WATERLINE PLAN & PROFILE STA 70+00 TO STA 75+00

SHEET 13 OF 15

DESIGN:	MAM	DATE:	SHEET NO.
DESIGN CK:	MAM	1/24/2006	291
DRAWN:	BAG		
DRAW CK:	MAM		

467BECKST
3:12:10 PM
bglover
PLOT DATE: 1/24/2006
FILE NAME: g:\work\467beckst\dgn\drainage\467wpp13.dgn

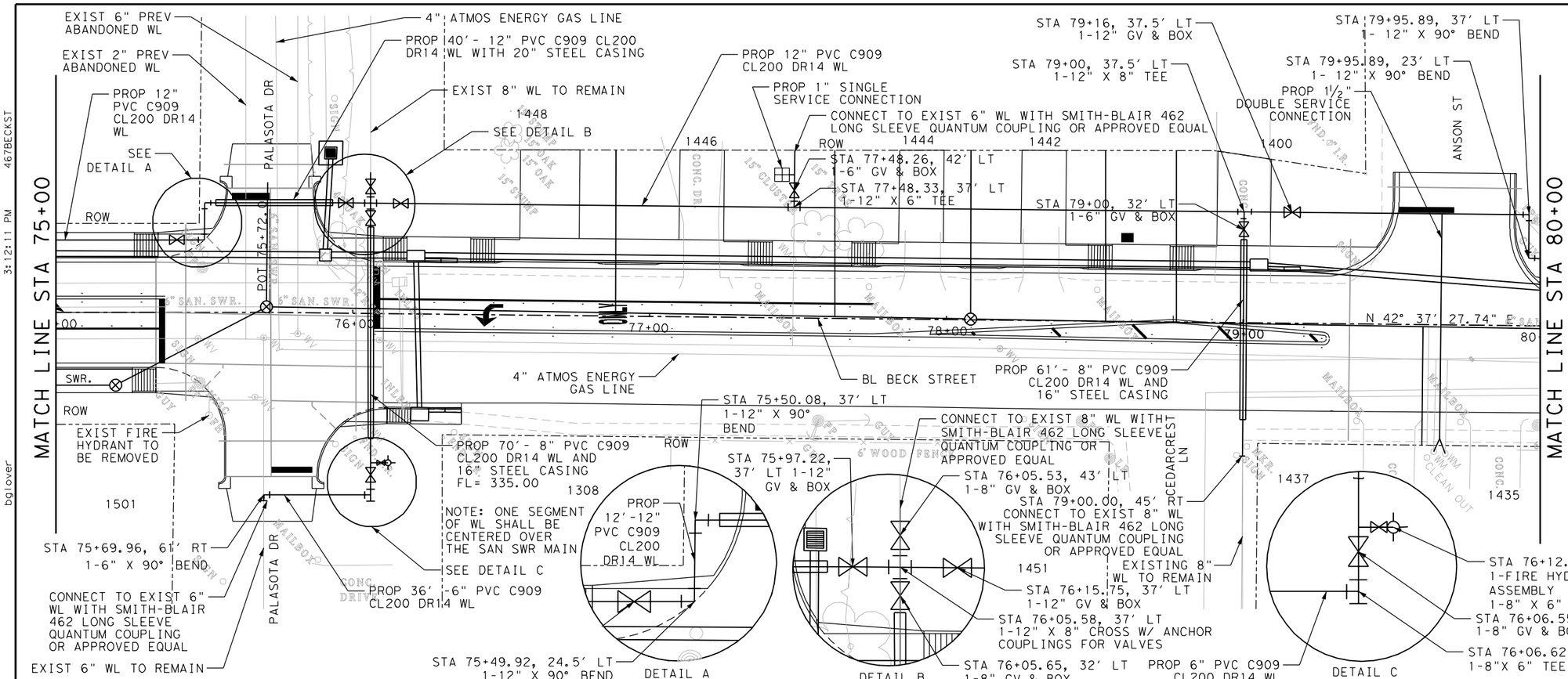

LEGEND

- DITCH FLOW LINE
- FENCE
- UTILITY POLE
- NEW WATER METER
- TELEPHONE CABLE PEDESTAL
- PROPOSED WATER VALVE
- EXISTING WATER VALVE
- PROPOSED SAN SWR MANHOLE
- EXISTING SAN SWR MANHOLE
- PROPOSED FIRE HYDRANT
- WL WATERLINE

NOTE:

1. LOCATIONS OF EXISTING UTILITIES ARE APPROXIMATE ONLY. CONTRACTOR SHALL FIELD VERIFY PRIOR TO CONSTRUCTION.

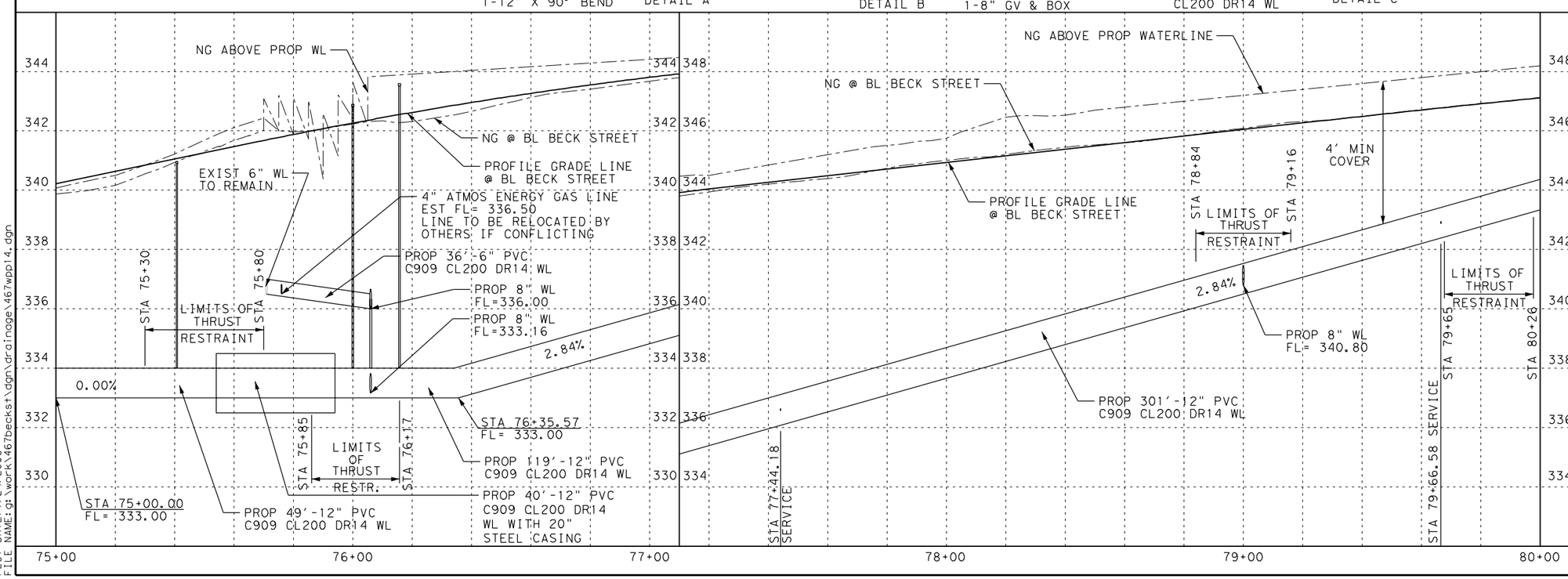

THE SEAL APPEARING ON THIS DOCUMENT WAS AUTHORIZED BY MICHAEL A. MARTIN, P.E. 63282 ON 1/23/2006

Epsilon Engineering, Inc.
526 E. UNIVERSITY, 201A / COLLEGE STATION, TEXAS 77840
(979) 764-9119 / eei@epsilonengr.com

CITY OF BRYAN ENGINEERING SERVICES

BECK STREET

BECK STREET WATERLINE PLAN & PROFILE STA 75+00 TO STA 80+00

SHEET 14 OF 15

DESIGN:	MAM	DATE:	SHEET NO.
DESIGN CK:	MAM	1/24/2006	292
DRAWN:	BAG		
DRAW CK:	MAM		

PLOT DATE: 1/24/2006
FILE NAME: g:\work\467becks1\dgn\drainage\467wpp14.dgn

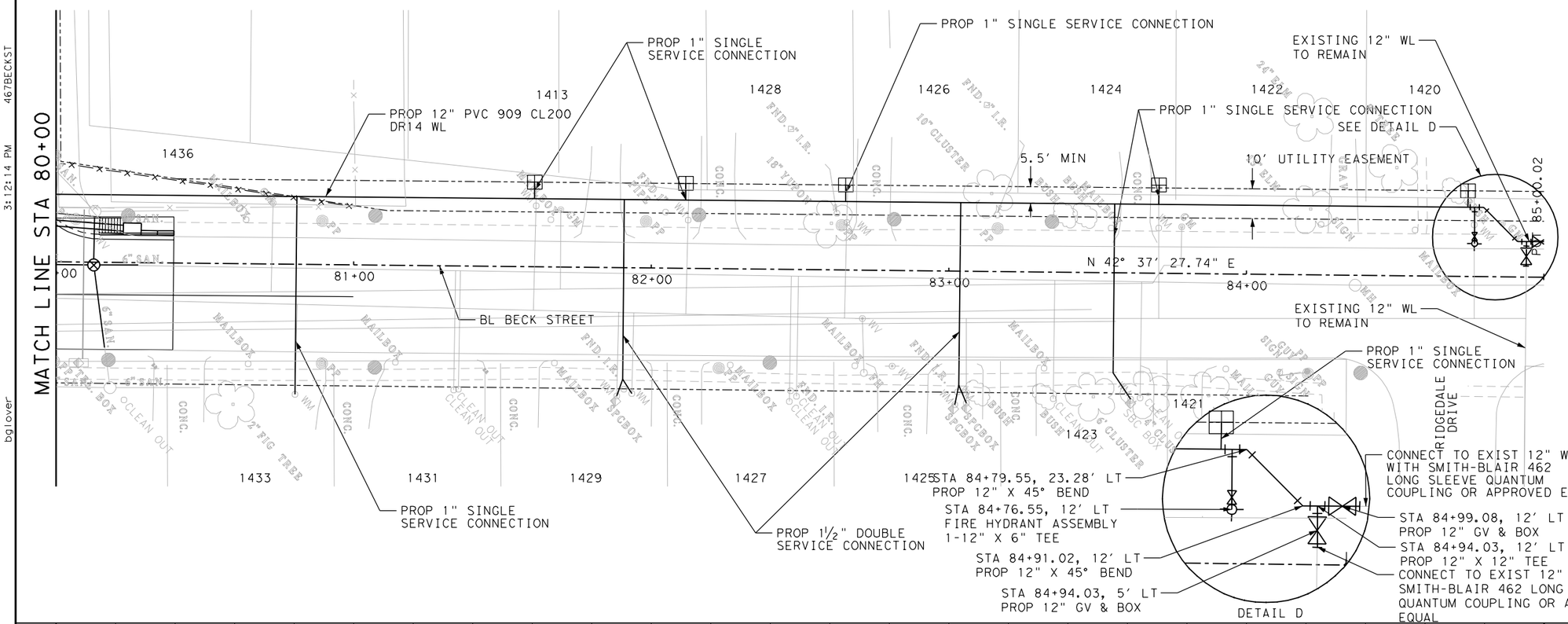

LEGEND

- DITCH FLOW LINE
- FENCE
- UTILITY POLE
- NEW WATER METER
- TELEPHONE CABLE PEDESTAL
- PROPOSED WATER VALVE
- EXISTING WATER VALVE
- PROPOSED SAN SWR MANHOLE
- EXISTING SAN SWR MANHOLE
- PROPOSED FIRE HYDRANT
- WL WATERLINE

NOTE:

1. LOCATIONS OF EXISTING UTILITIES ARE APPROXIMATE ONLY. CONTRACTOR SHALL FIELD VERIFY PRIOR TO CONSTRUCTION.

0 20 40

SCALE: H, 1"= 40' V, 1'=4'

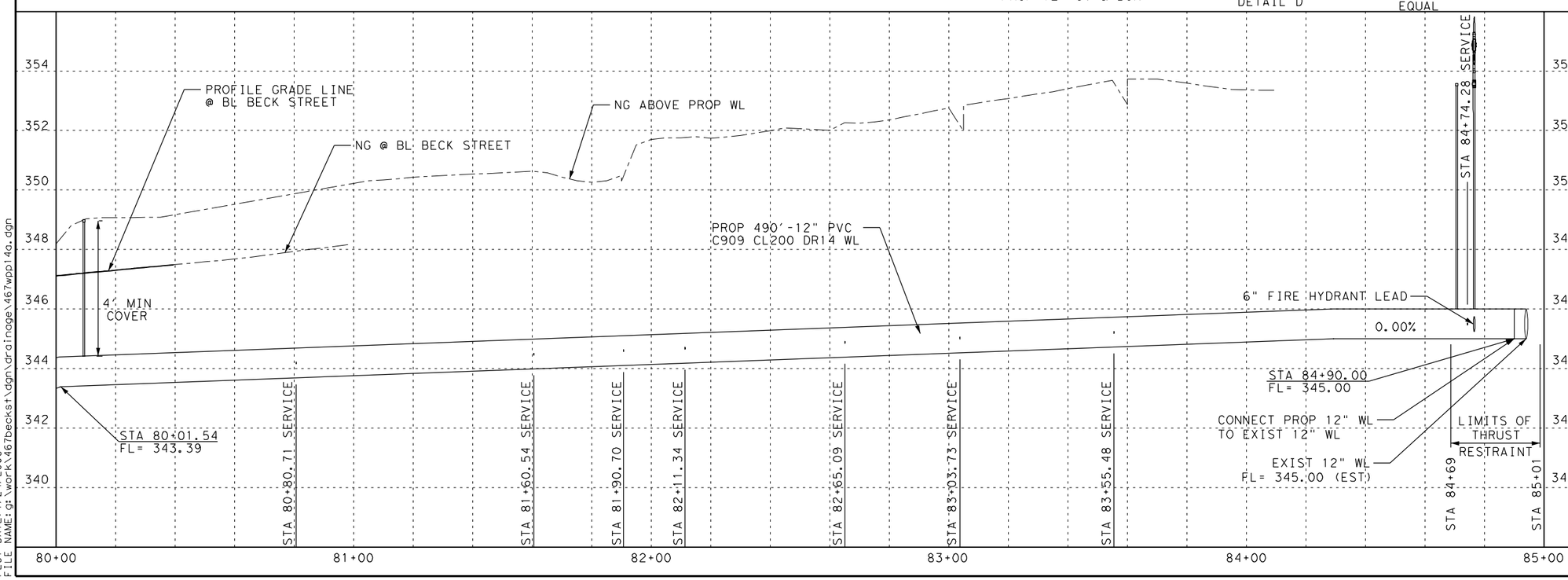

STATE OF TEXAS
MICHAEL A. MARTIN
63282
REGISTERED PROFESSIONAL ENGINEER

THE SEAL APPEARING ON THIS DOCUMENT WAS AUTHORIZED BY MICHAEL A. MARTIN, P.E. 63282 ON 1/23/2006

Epsilon Engineering, Inc.
526 E. UNIVERSITY, 201A / COLLEGE STATION, TEXAS 77840
(979) 764-9119 / eei@epsilonengr.com

CITY OF BRYAN ENGINEERING SERVICES

BECK STREET

BECK STREET WATERLINE PLAN & PROFILE STA 80+00 TO STA 85+00

SHEET 15 OF 15

DESIGN:	MAM	DATE:	SHEET NO.
DESIGN CK:	MAM	1/24/2006	293
DRAWN:	BAG		
DRAW CK:	MAM		

467BECKST 3:12:14 PM bglover

PLOT DATE: 1/24/2006
FILE NAME: g:\work\467beckst\dgn\drainage\467wpp14a.dgn

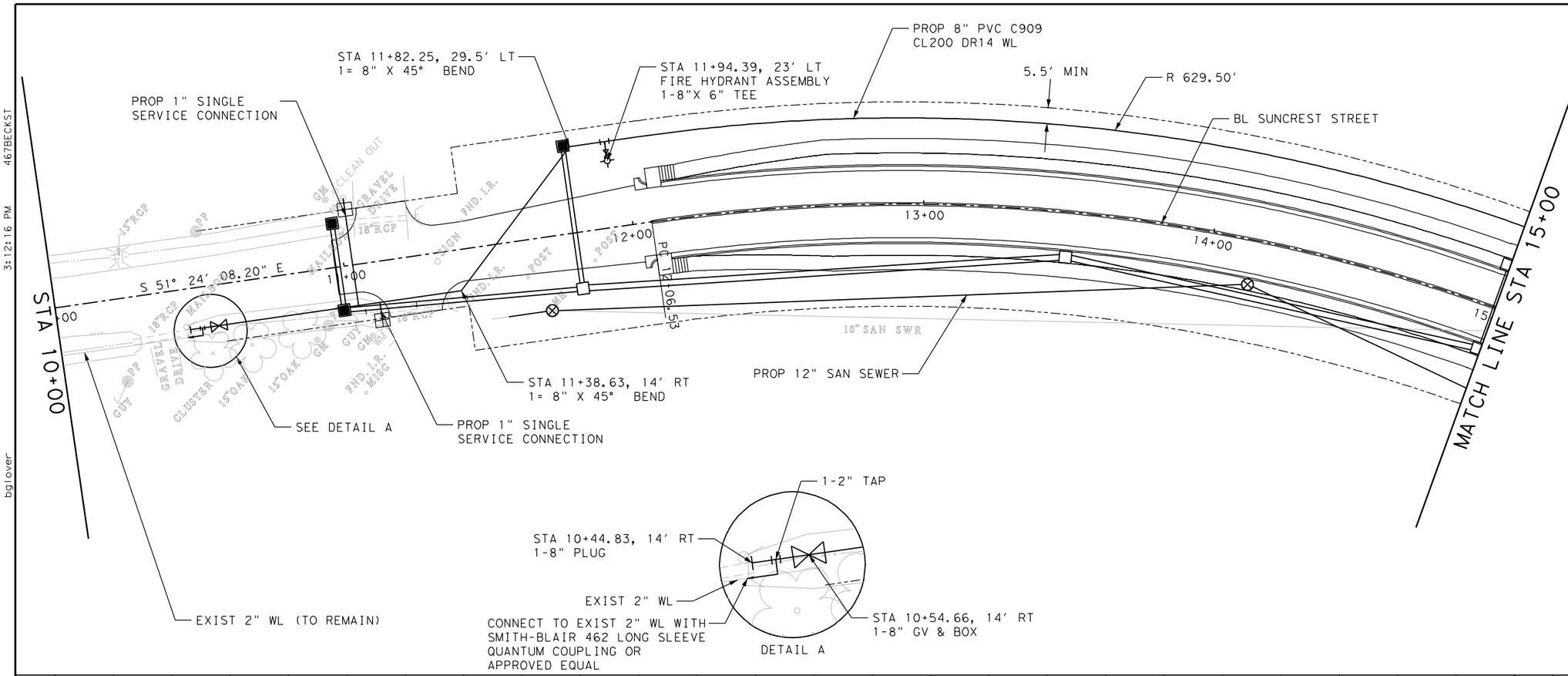

LEGEND

- DITCH FLOW LINE
- FENCE
- UTILITY POLE
- NEW WATER METER
- TELEPHONE CABLE PEDESTAL
- PROPOSED WATER VALVE
- EXISTING WATER VALVE
- PROPOSED SAN SWR MANHOLE
- EXISTING SAN SWR MANHOLE
- PROPOSED FIRE HYDRANT
- WL WATERLINE

NOTE:

1. LOCATIONS OF EXISTING UTILITIES ARE APPROXIMATE ONLY. CONTRACTOR SHALL FIELD VERIFY PRIOR TO CONSTRUCTION.

0 20 40
SCALE: H, 1"= 40' V, 1'=4'

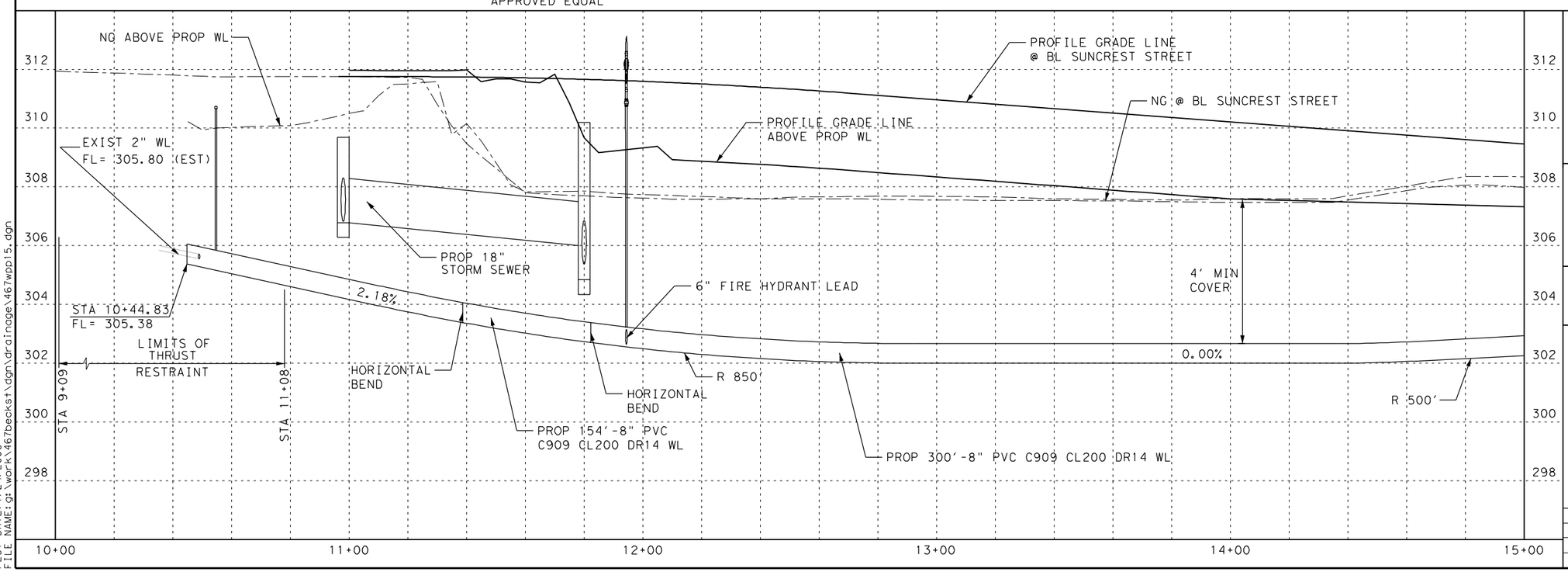

STATE OF TEXAS
MICHAEL A. MARTIN
63282
REGISTERED PROFESSIONAL ENGINEER

THE SEAL APPEARING ON THIS DOCUMENT WAS AUTHORIZED BY MICHAEL A. MARTIN, P.E. 63282 ON 1/23/2006

Epsilon Engineering, Inc.
526 E. UNIVERSITY, 201A / COLLEGE STATION, TEXAS 77840
(979) 764-9119 / eei@epsilonengr.com

CITY OF BRYAN
ENGINEERING
SERVICES

BECK STREET

SUNCREST STREET WATERLINE PLAN & PROFILE STA 10+00 TO STA 15+00

SHEET 1 OF 2

DESIGN:	MAM	DATE:	SHEET NO.
DESIGN CK:	MAM	1/24/2006	294
DRAWN:	BAG		
DRAW CK:	MAM		

467BECKST
3:12:16 PM
bglover
PLOT DATE: 1/24/2006
FILE NAME: g:\work\467beckst\dgn\drainage\467wpp15.dgn

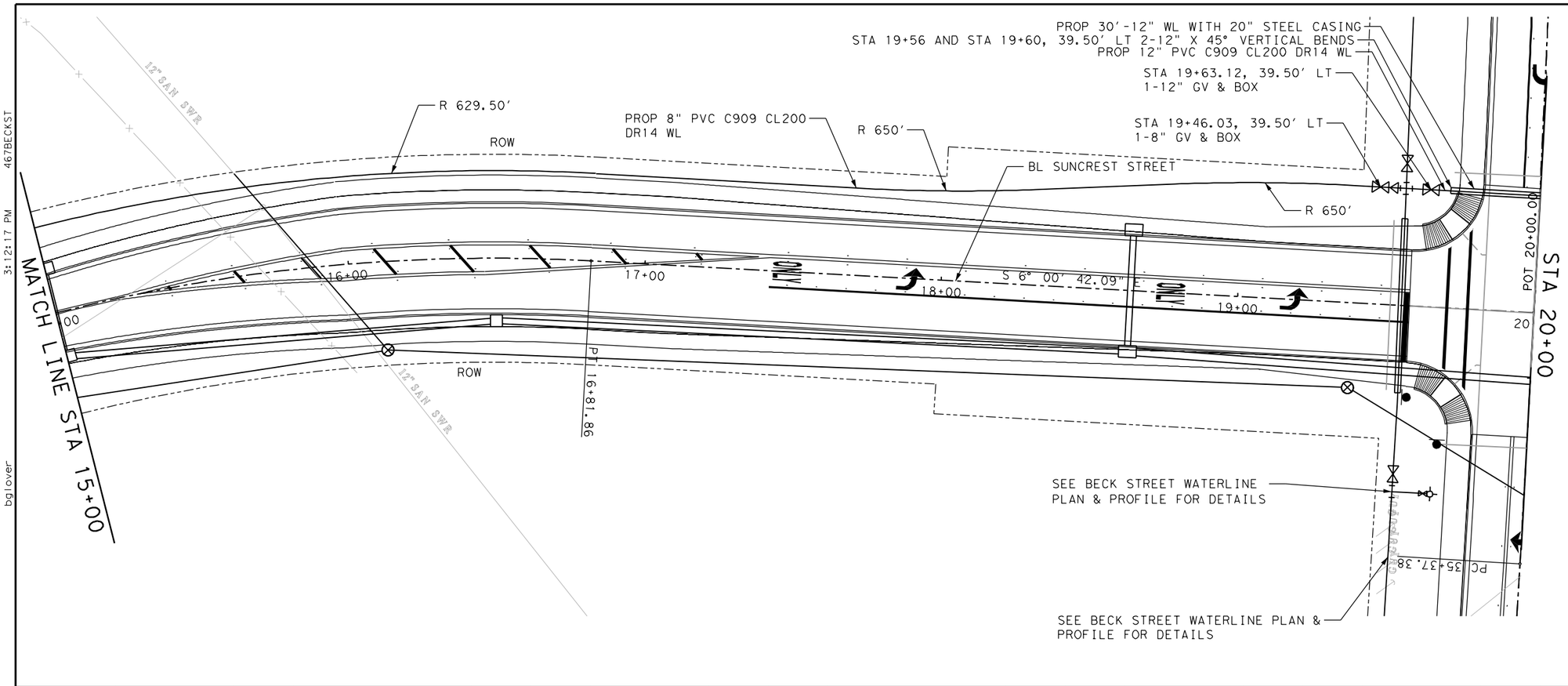

LEGEND

- DITCH FLOW LINE
- FENCE
- UTILITY POLE
- NEW WATER METER
- TELEPHONE CABLE PEDESTAL
- PROPOSED WATER VALVE
- EXISTING WATER VALVE
- PROPOSED SAN SWR MANHOLE
- EXISTING SAN SWR MANHOLE
- PROPOSED FIRE HYDRANT
- WL WATERLINE

NOTE:

1. LOCATIONS OF EXISTING UTILITIES ARE APPROXIMATE ONLY. CONTRACTOR SHALL FIELD VERIFY PRIOR TO CONSTRUCTION.

0 20 40

SCALE: H, 1" = 40' V, 1' = 4'

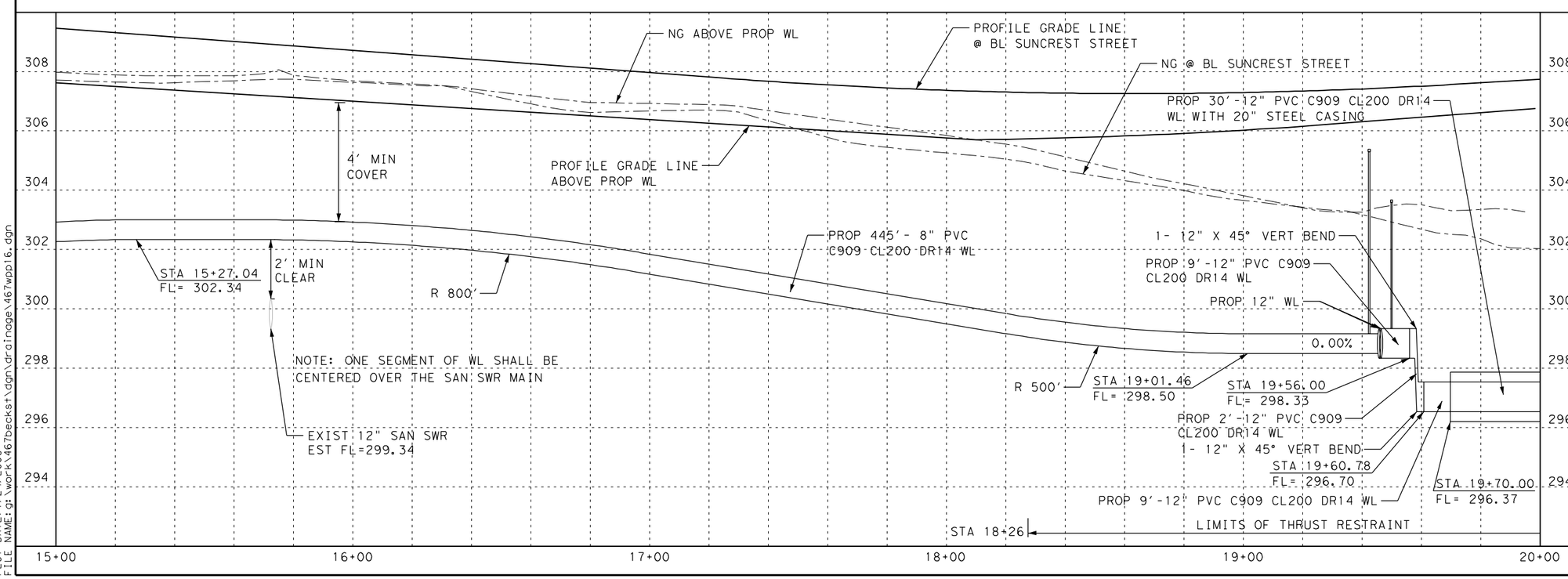

STATE OF TEXAS
MICHAEL A. MARTIN
63282
REGISTERED PROFESSIONAL ENGINEER

THE SEAL APPEARING ON THIS DOCUMENT WAS AUTHORIZED BY MICHAEL A. MARTIN, P.E. 63282 ON 1/23/2006

Epsilon Engineering, Inc.
526 E. UNIVERSITY, 201A / COLLEGE STATION, TEXAS 77840
(979) 764-9119 / eei@epsilonengr.com

CITY OF BRYAN ENGINEERING SERVICES

BECK STREET

SUNCREST STREET WATERLINE PLAN & PROFILE STA 15+00 TO STA 20+00

SHEET 2 OF 2

DESIGN:	MAM	DATE:	SHEET NO.
DESIGN CK:	MAM	1/24/2006	295
DRAWN:	BAG		
DRAW CK:	MAM		

467BECKST 3:12:17 PM bglover

PLOT DATE: 1/24/2006
FILE NAME: g:\work\467becks1\dgn\drainage\467wpp16.dgn

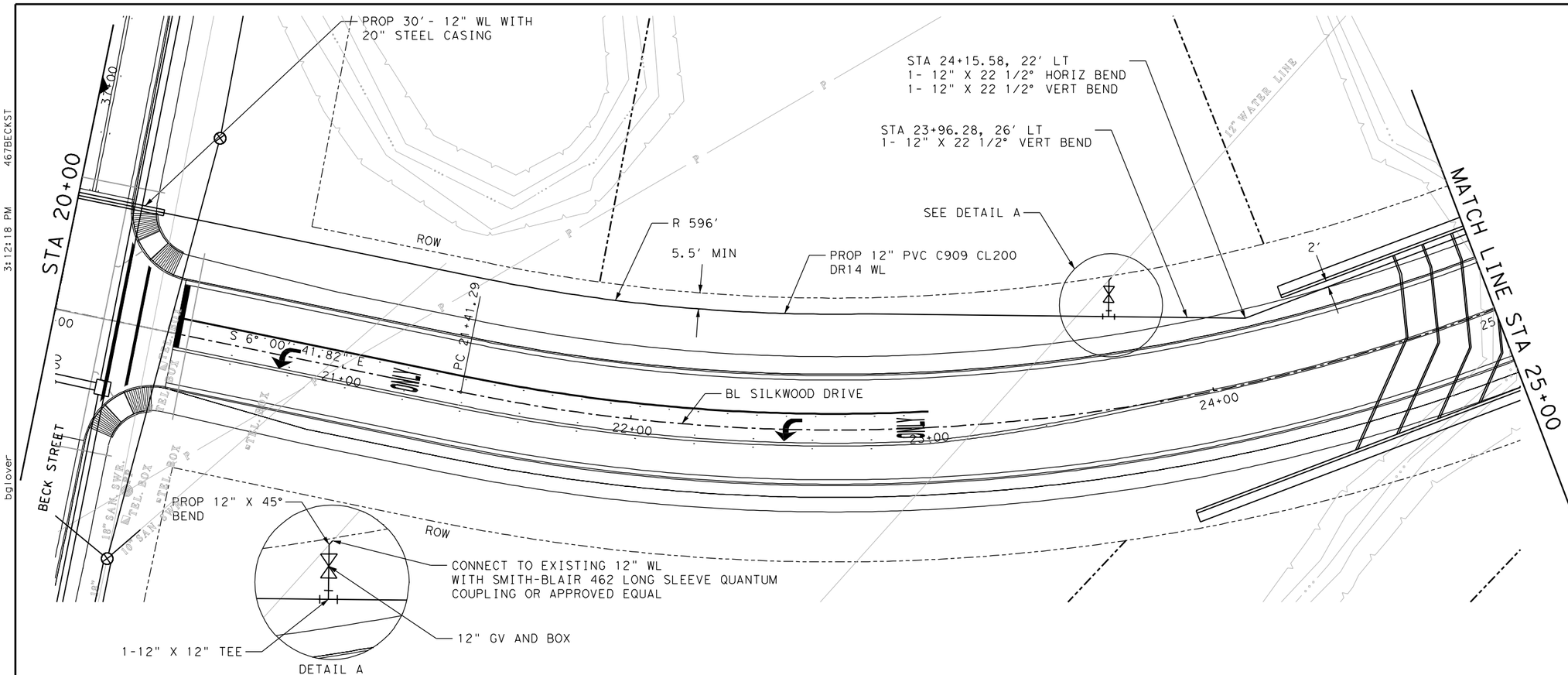

LEGEND

- DITCH FLOW LINE
- FENCE
- UTILITY POLE
- NEW WATER METER
- TELEPHONE CABLE PEDESTAL
- PROPOSED WATER VALVE
- EXISTING WATER VALVE
- PROPOSED SAN SWR MANHOLE
- EXISTING SAN SWR MANHOLE
- PROPOSED FIRE HYDRANT
- WL WATERLINE

NOTE:

1. LOCATIONS OF EXISTING UTILITIES ARE APPROXIMATE ONLY. CONTRACTOR SHALL FIELD VERIFY PRIOR TO CONSTRUCTION.

0 20 40
SCALE: H, 1" = 40' V, 1' = 4'

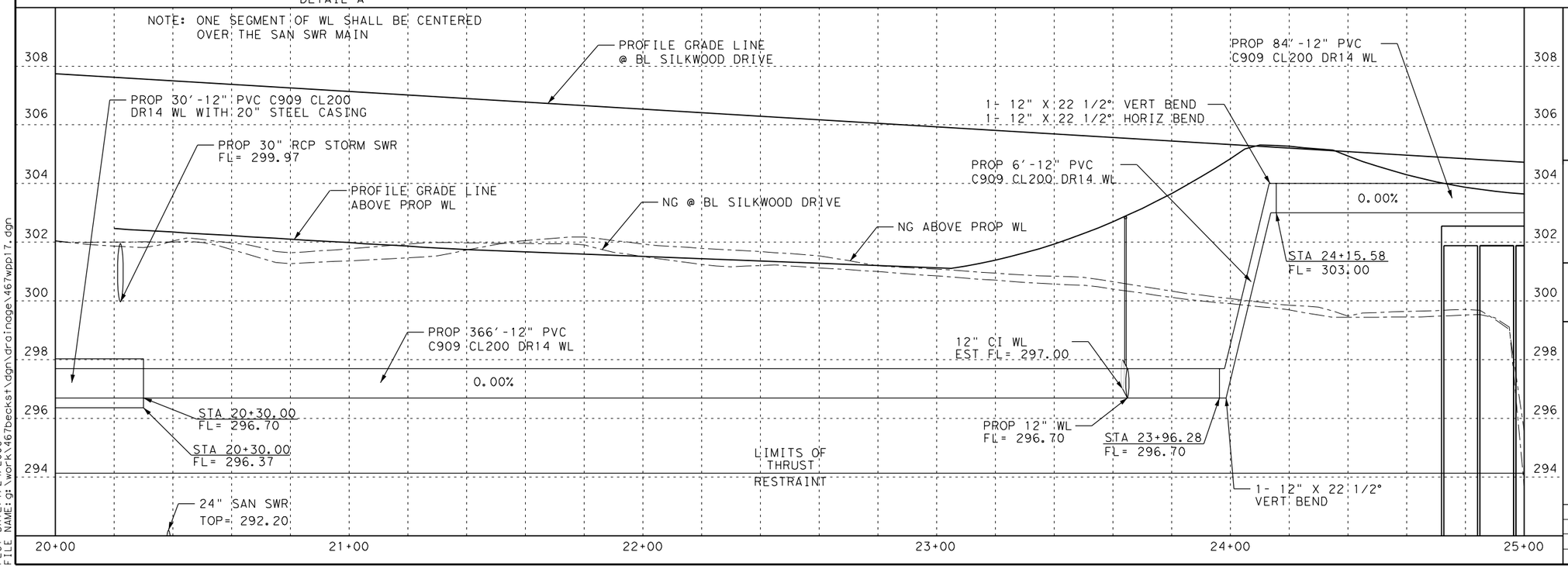

STATE OF TEXAS
MICHAEL A. MARTIN
63282
REGISTERED
PROFESSIONAL ENGINEER

THE SEAL APPEARING ON THIS DOCUMENT WAS AUTHORIZED BY MICHAEL A. MARTIN, P.E. 63282 ON 1/23/2006

Epsilon Engineering, Inc.
526 E. UNIVERSITY, 201A / COLLEGE STATION, TEXAS 77840
(979) 764-9119 / eei@epsilonengr.com

CITY OF BRYAN
ENGINEERING
SERVICES

BECK STREET

SILKWOOD DRIVE WATERLINE PLAN & PROFILE STA 20+00 TO STA 25+00

SHEET 1 OF 2

DESIGN:	MAM	DATE:	SHEET NO.
DESIGN CK:	MAM	1/24/2006	296
DRAWN:	BAG		
DRAW CK:	MAM		

PLOT DATE: 1/24/2006
FILE NAME: g:\work\467beckst\dgn\drainage\467wpp17.dgn
bglover
3:12:18 PM
467BECKST

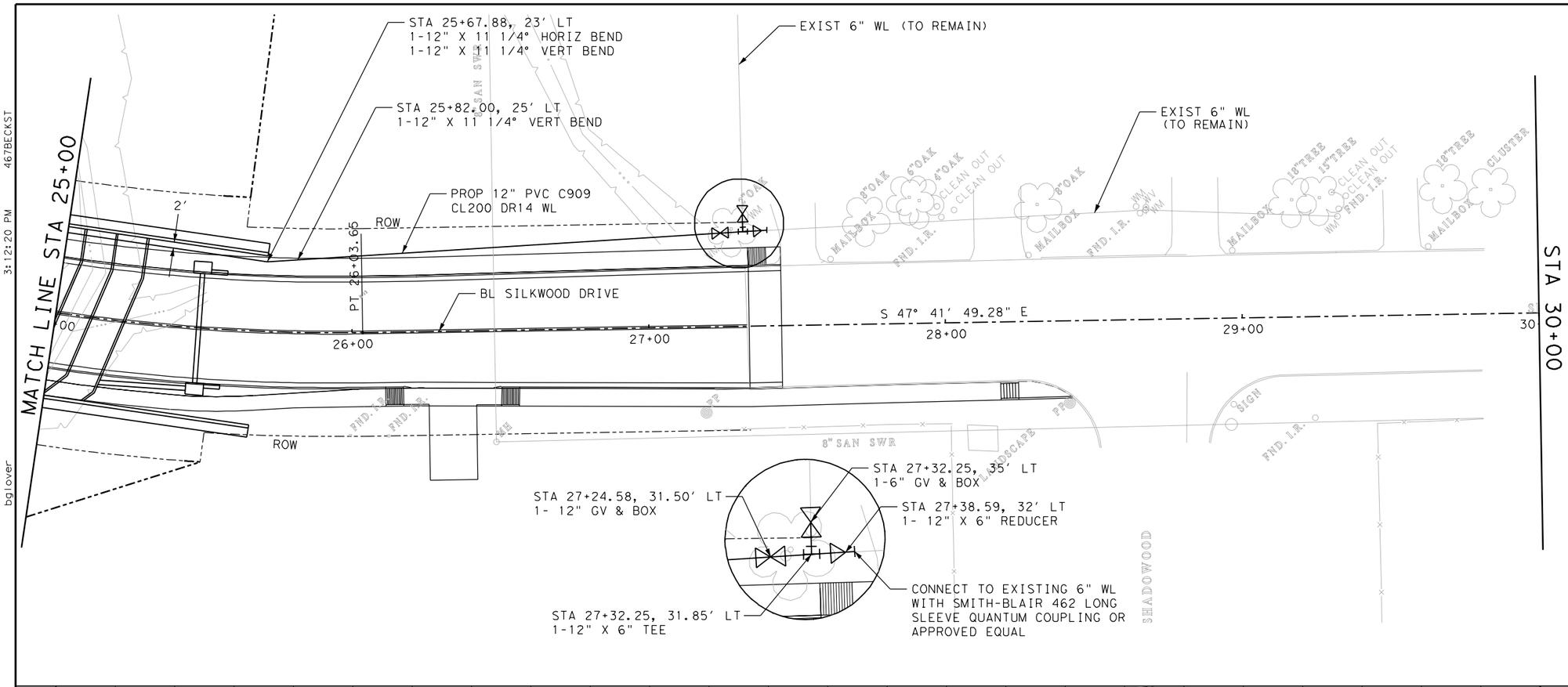

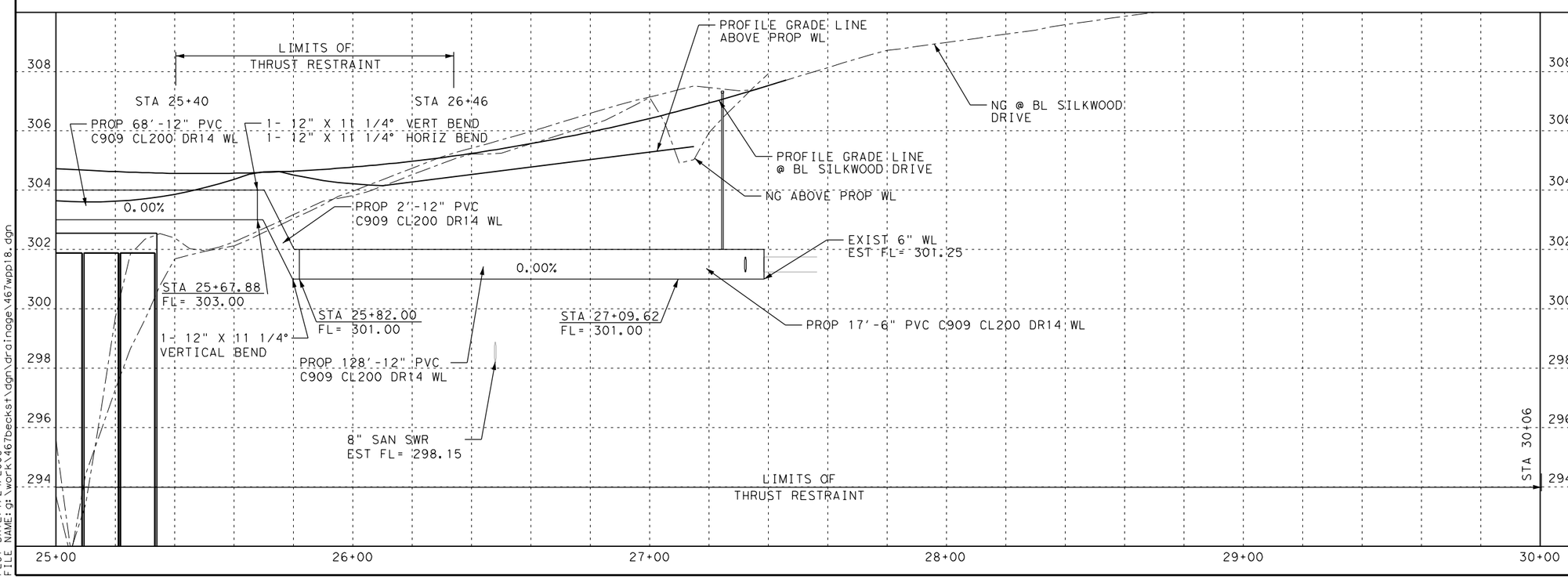

THE SEAL APPEARING ON THIS DOCUMENT WAS AUTHORIZED BY MICHAEL A. MARTIN, P.E. 63282 ON 1/23/2006

Epsilon Engineering, Inc.
526 E. UNIVERSITY, 201A / COLLEGE STATION, TEXAS 77840
(979) 764-9119 / eei@epsilonengr.com

CITY OF BRYAN ENGINEERING SERVICES

BECK STREET

SILKWOOD DRIVE WATERLINE PLAN & PROFILE STA 25+00 TO STA 30+00

SHEET 2 OF 2

DESIGN:	MAM	DATE:	SHEET NO.
DESIGN CK:	MAM	1/24/2006	297
DRAWN:	BAG		
DRAW CK:	MAM		

467BECKST 3:12:20 PM bglover

PLOT DATE: 1/24/2006
FILE NAME: g:\work\467becks1\dgn\drainage\467wpp18.dgn

NOTES:

1. NO SPLICES IN POLYETHYLENE TUBING WILL BE ALLOWED BETWEEN THE SERVICE SADDLE AND THE CURB STOP FOR SINGLE SERVICE OR BETWEEN THE SERVICE SADDLE AND THE WYE FOR DOUBLE SERVICE.
2. IT SHALL BE THE RESPONSIBILITY OF THE CONTRACTOR TO PRESSURE TEST LINES IMMEDIATELY AFTER THE STREET CROSSINGS HAVE BEEN INSTALLED.
3. MARK EACH SERVICE END WITH METAL "T" POST PAINTED BLUE.
4. MATERIAL USED SHALL BE AS SPECIFIED OR AN APPROVED EQUAL.
5. ALL CONNECTIONS TO BE COMPRESSION TYPE (FLARE FITTINGS ARE ACCEPTABLE).
6. ALL SERVICE WYES & EXTENSIONS ARE TO BE INSTALLED WITH THE MAIN LINE CONSTRUCTION.

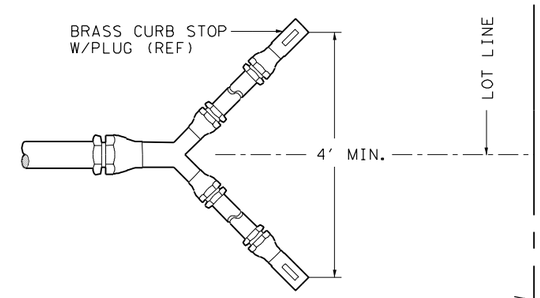

VIEW A-A
DOUBLE SERVICE

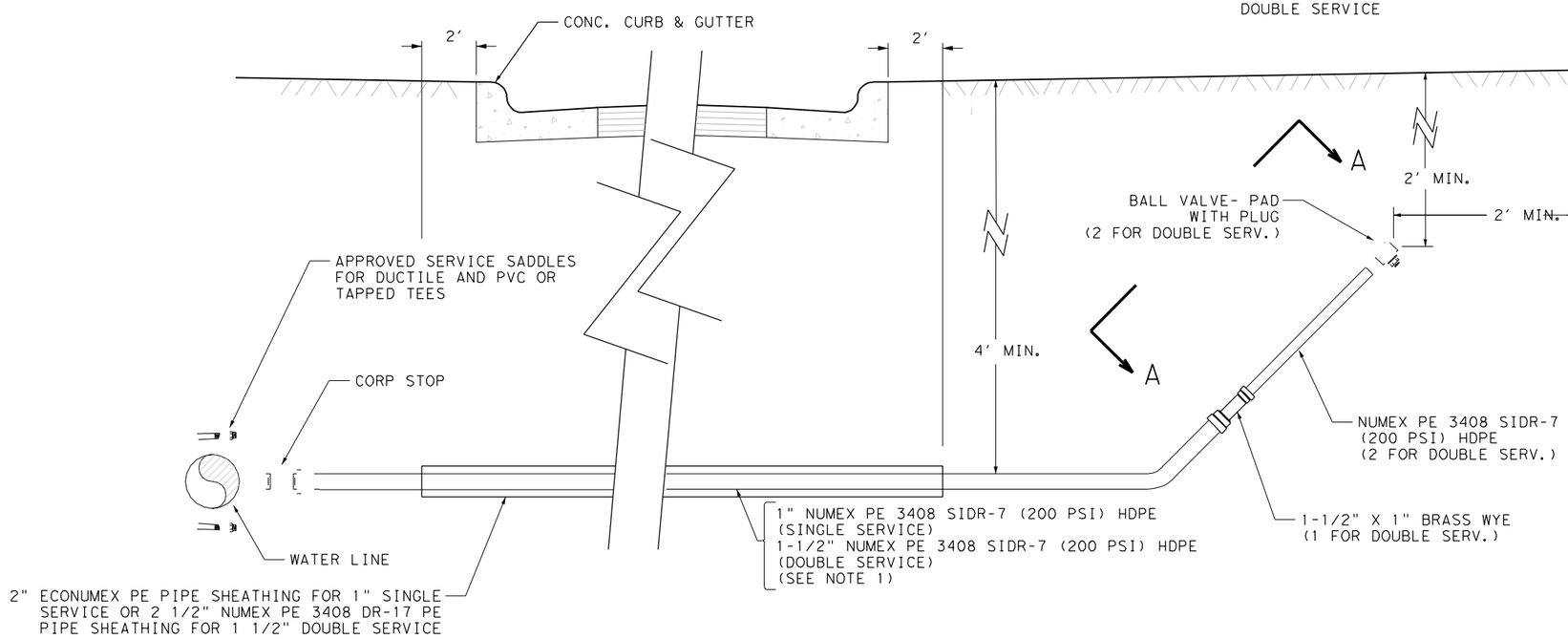

WATER CROSSING

NOT TO SCALE

STATE OF TEXAS
MICHAEL A. MARTIN
63282
REGISTERED PROFESSIONAL ENGINEER

THE SEAL APPEARING ON THIS DOCUMENT WAS AUTHORIZED BY MICHAEL A. MARTIN, P.E. 63282 ON 1/23/2006

Epsilon Engineering, Inc.
526 E. UNIVERSITY, 201A / COLLEGE STATION, TEXAS 77840
(979) 764-9119 / eei@epsilonengr.com

CITY OF BRYAN
ENGINEERING
SERVICES

BECK STREET

WATER CROSSING DETAILS

SHEET 1 OF 1

DESIGN:	MAM	DATE:	SHEET NO.
DESIGN CK:	MAM	1/24/2006	298
DRAWN:	BAG		
DRAW CK:	MAM		

PLOT DATE: 1/24/2006
FILE NAME: g:\work\467becks t\dgn\drainage\467wtd01.dgn
bglover 3:12:20 PM 467BECKST

NOTE:
VALVE EXTENSION TO BE USED ONLY WHEN TOP OF GATE VALVE IS DEEPER THAN 5 FEET FROM FINISHED GRADE.

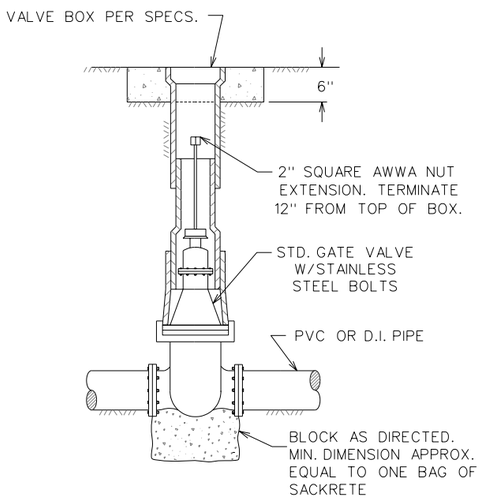

GATE VALVE & BOX

W1-00

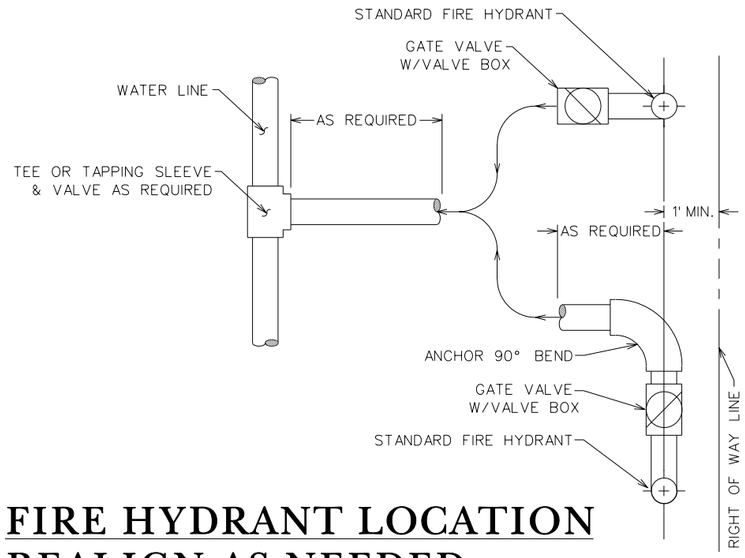

FIRE HYDRANT LOCATION REALIGN AS NEEDED

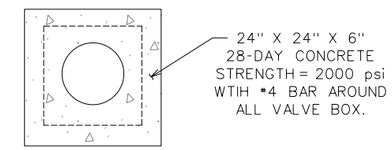

VIEW A - A

General Notes:

(1) Finely divided earth free of rock, lumps and clods exceeding 6" shall be placed by hand, and compacted around the cast iron pipe to a depth of 12" over the top of the pipe before back fill is begun by any mechanical equipment.
(2) All concrete blocking shall be - 28 day concrete strength = 2000psi.
(3) All thrust blocking shall provide a minimum of 2 square feet of bearing area of concrete on undisturbed soil, or as directed by the engineer.
(4) Water mains will not be fully pressurized until concrete has reached 7 day strength.
(5) All pipe will be laid so as the entire barrel will have full bearing on the fine graded trench bottom. Bell holes shall be cut for each bell and fire hydrant.
(6) All gate valves to be "O" ring type, with non-rising stems; with M. J. ends including all glands, bolts and gaskets; and to open counter-clockwise (left).
(7) All fittings shall be mechanical joints unless otherwise directed.

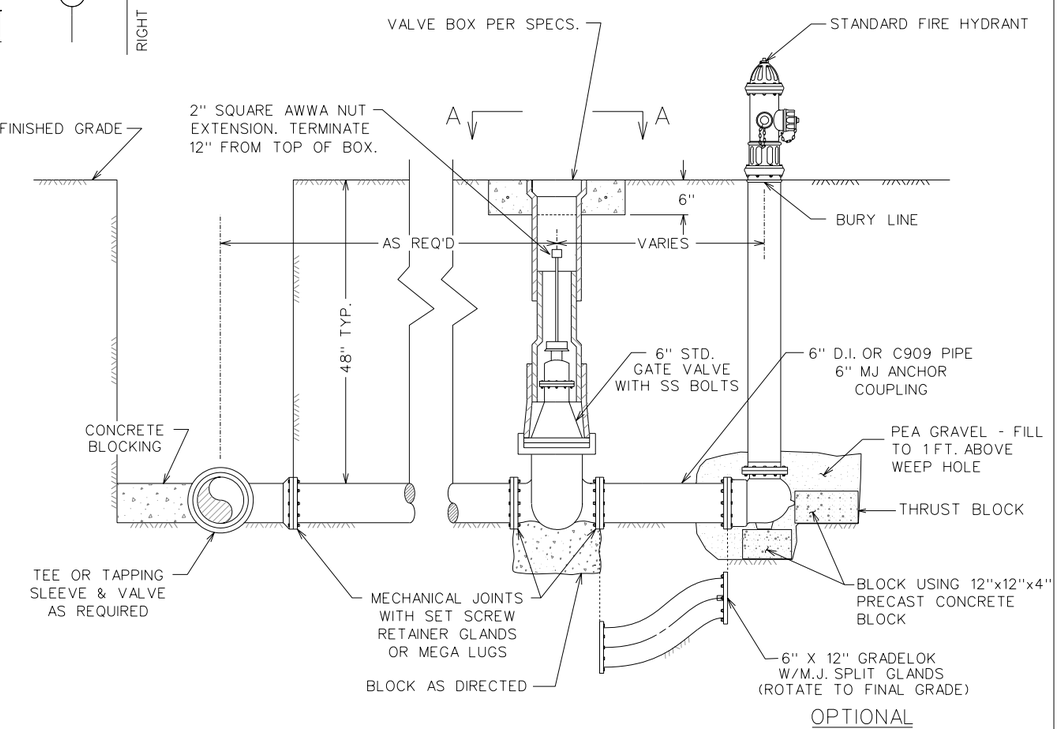

STANDARD FIRE HYDRANT ASSEMBLY

W1-01

REVISIONS:

BRYAN - COLLEGE STATION
STANDARD WATER DETAILS

CITY OF COLLEGE STATION

CITY OF BRYAN
The Good Life, Texas Style.™

DRAWN BY: RH
DATE: 01-01-05
SCALE: N T S
APPROVED: W.P.K.
FIGURE:
W1
SHEET 1 OF 4

NOTE: USE POLYETHYLENE WRAP OR EQUAL BETWEEN CONCRETE & PLUG TO PREVENT CONCRETE FROM STICKING TO PLUG.

TEE AND PLUG SCHEDULE				
ID (in)	THRUST (tons)	C (ft)	A (ft)	VOLUME (c.y.)
4,6,8	5.1	1.5	2.5	0.3
10,12	11.3	1.5	3.5	0.6

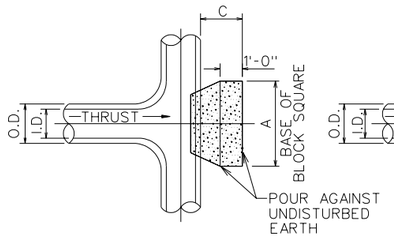

TEE THRUST BLOCK

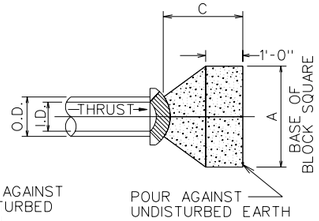

PLUG THRUST BLOCK

THRUST BLOCK NOTES:

1. ALL CALCULATIONS ARE BASED ON INTERNAL PRESSURE OF 200psi FOR 24" AND SMALLER INNER DIAMETER PIPE.
2. ALL BEARING SURFACES OF THRUST BLOCKS SHALL BE PLACED AGAINST UNDISTURBED EARTH OR ROCK.
3. CONCRETE FOR BLOCKING SHALL BE 2000 psi.
4. DIMENSIONS MAY BE VARIED AS REQUIRED BY FIELD WHERE AND AS DIRECTED BY THE ENGINEER. THE VOLUME OF CONCRETE BLOCKING SHALL NOT BE LESS THAN SHOWN HERE.
5. WATER MAIN WILL NOT BE FILLED UNTIL ALL CONCRETE BLOCKING HAS REACHED 1500psi.

THRUST BLOCK DETAILS

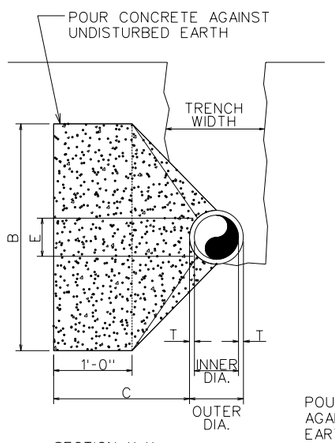

SECTION X-X

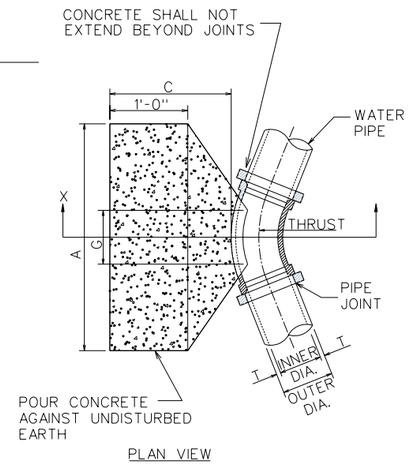

PLAN VIEW

HORIZONTAL THRUST BLOCK SCHEDULE

BEND	SIZE	A (ft)	B (ft)	C (ft)	E (ft)	G (ft)	VOLUME (c.y.)
90°	6,8"	5.0	1.5	1.5	0.9	2.7	0.4
	10,12"	6.5	2.5	1.5	1.2	4.0	1.0
45°	6,8"	2.0	2.0	1.5	0.9	1.5	0.2
	10,12"	3.5	2.5	1.5	1.2	2.2	0.5
22.5°	6,8"	1.5	1.5	1.5	0.9	0.8	0.1
	10,12"	2.0	2.5	1.5	1.2	1.1	0.3
11.25°	6,8"	1.0	1.5	1.5	0.9	0.4	0.1
	10,12"	1.5	1.5	1.5	1.2	0.6	0.1

TYPICAL HORIZONTAL THRUST BLOCK

W2-00

NOTES:

1. NO SPLICES IN COPPER TUBING WILL BE ALLOWED BETWEEN THE SERVICE SADDLE AND THE CURB STOP FOR SINGLE SERVICE OR BETWEEN THE SERVICE SADDLE AND THE WYE FOR DOUBLE SERVICE.
2. IT SHALL BE THE RESPONSIBILITY OF THE CONTRACTOR TO PRESSURE TEST LINES IMMEDIATELY AFTER THE STREET CROSSINGS HAVE BEEN INSTALLED.
3. MARK EACH SERVICE END WITH METAL "T" POST PAINTED BLUE.
4. MATERIAL USED SHALL BE AS SPECIFIED OR AN APPROVED EQUAL.
5. ALL CONNECTIONS TO BE COMPRESSION TYPE.
6. ALL SERVICE WYES & EXTENSIONS ARE TO BE INSTALLED WITH THE MAIN LINE CONSTRUCTION.

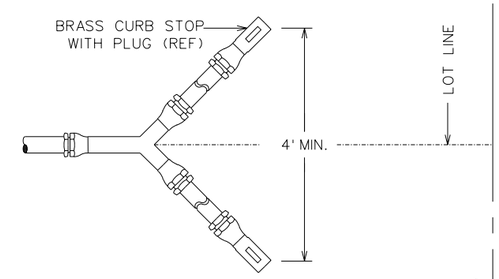

VIEW A-A
DOUBLE SERVICE

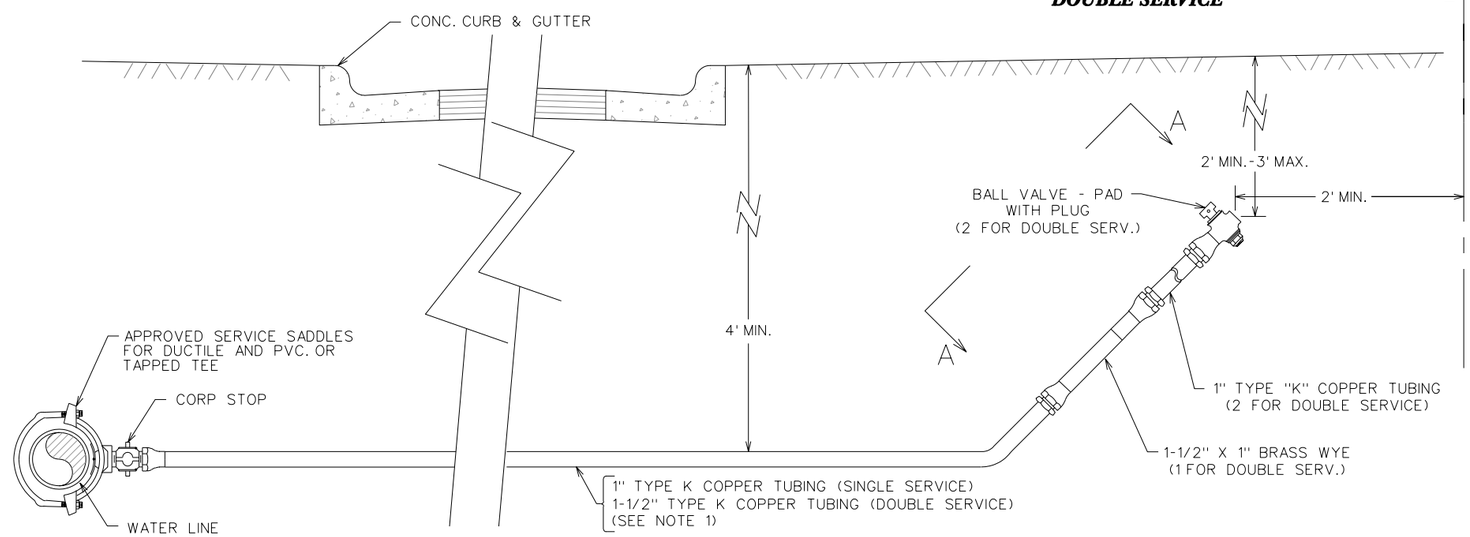

WATER CROSSING

W2-01

REVISIONS:

BRYAN - COLLEGE STATION
STANDARD WATER DETAILS

CITY OF COLLEGE STATION

CITY OF BRYAN
The Good Life, Texas Style.™

DRAWN BY: RJ
DATE: 01-01-05
SCALE: N T S
APPROVED: W.P.K.
FIGURE:
W2
SHEET 2 OF 4

SPECIAL CONDITIONS

1. METER REGISTER SHALL BE NO DEEPER THAN 12 INCHES BELOW FINISHED GRADE.
2. FLOOR OF VAULT WILL BE A MINIMUM OF 6 INCHES FROM BOTTOM OF ANY PIPING APPARATUS OR METER WITHIN THE VAULT.
3. REINFORCED CONCRETE VAULT BASE (FLOOR) SHALL BE CONSTRUCTED USING A STANDARD FIVE SACK CONCRETE MIX AND REINFORCING COMPRISED OF #3 REBAR ON 12 INCH CENTERS WITH A MINIMUM BASE THICKNESS OF 6 INCHES.
4. SET SCREW RETAINER GLANDS SHALL BE INSTALLED AT EACH FITTING ON MECHANICAL JOINT PIPE.
5. VALVES SHALL MEET THE CITY SPECIFICATIONS FOR VALVES.
6. THERE SHALL BE NO PIPING UNDER THE FLOOR OF THE VAULT.

APPROVED 3" OR LARGER COMPOUND METERS, VAULTS & MATERIALS

APPROVED METERS - SENSUS SRH (U. S. GALLONS)
APPROVED VAULTS - PARK DMC-BR PRE-CAST CONCRETE VAULT WITH ADEQUATE ACCESS AND VAULT DIMENSIONS FOR METER SELECTED
APPROVED MATERIALS - DUCTILE IRON PIPE WITH MECHANICAL JOINT. SET SCREW RETAINER GLANDS WILL BE USED ON ALL M. J. FITTINGS.

ANY DEVIATIONS FROM THE ABOVE SPECIAL CONDITIONS OR APPROVED METERS, VAULTS OR MATERIALS MUST BE SUBMITTED TO THE DIVISION MANAGER, WATER SERVICES, 72 HOURS PRIOR TO ANTICIPATED DEVIATION.

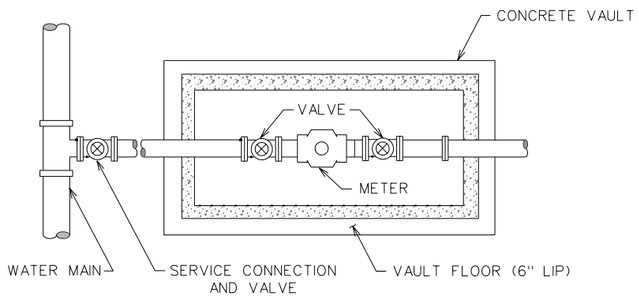

METER VAULT ASSEMBLY

W3-00

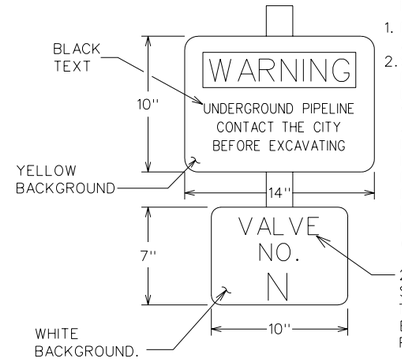

NOTES:
1. FURNISH AS SHOWN ON PLANS AND ON ALL VALVE SIGN POSTS.
2. SIGNS TO BE CONSTRUCTED FROM 20 GA. STEEL BAKED ON ENAMEL FINISH. FURNISH ONE WARNING AND ONE VALVE SIGN AND ONE POST FOR EACH VALVE INSTALLED AND AT OTHER LOCATIONS AS SHOWN ON PLANS. FURNISH SAME NUMBER OF REPLACEMENT SIGNS AS FOR EACH INSTALLED (OMITTING VALVE NUMBER ON VALVE SIGN BLANK) (NOT A SEPARATE PAY ITEM)

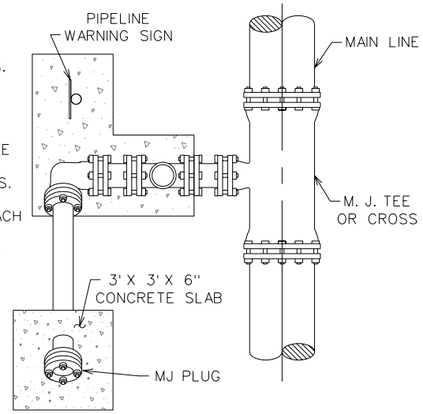

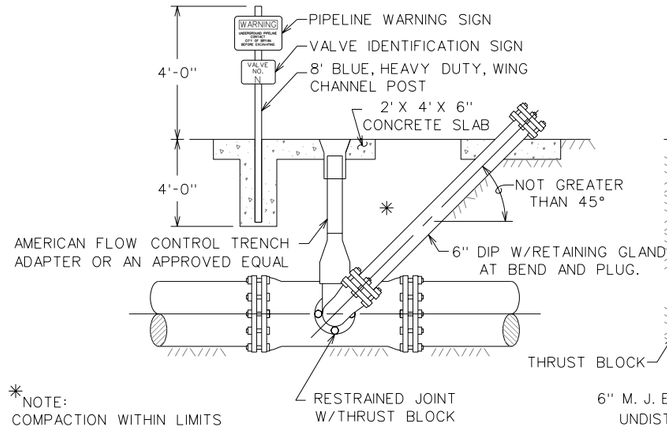

*NOTE:
COMPACTION WITHIN LIMITS OF ASSEMBLY SHALL BE 95% STANDARD DENSITY PER ASTM D698

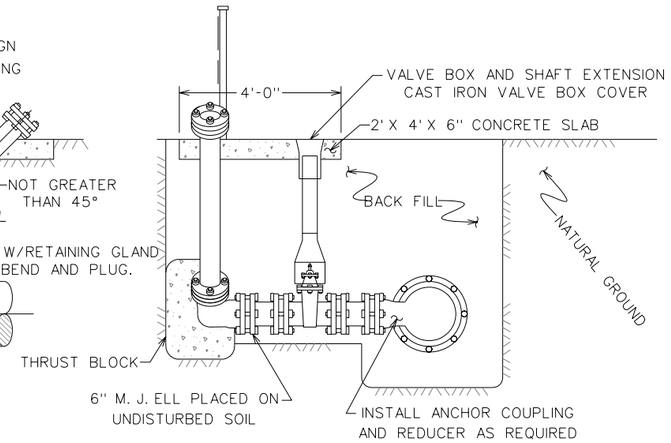

IN-LINE BLOW OFF ASSEMBLY

W3-01

NOTE:
1. EMBED COPPER LINE IN TAMPED SAND FROM UNDISTURBED SOIL TO 6" ABOVE AND ON BOTH SIDES OF COPPER PIPE.
2. PAYMENT FOR BID ITEM OF "AIR RELEASE VALVE" SHALL INCLUDE ALL MATERIALS, AS SHOWN IN DETAIL, INCLUDING MAIN LINE TAPPING SADDLE.
3. SIZE OF LINES AND VALVES MAY BE MODIFIED BY THE ENGINEER

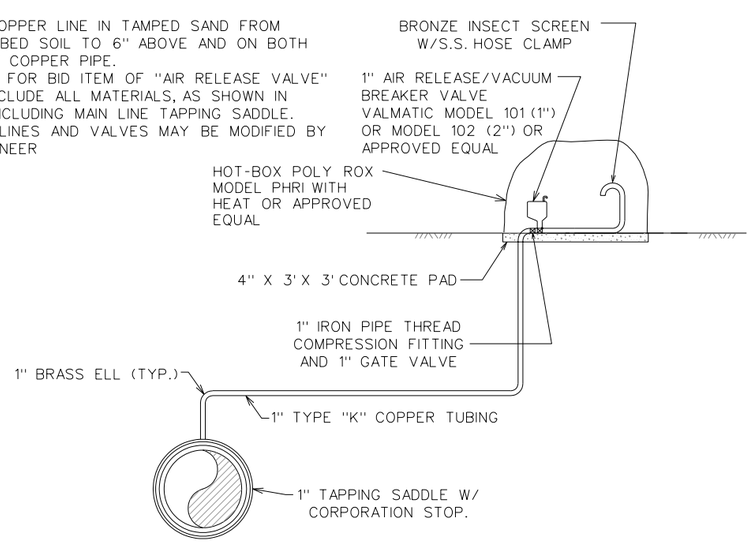

AIR RELEASE VALVE & VACUUM CHECK VALVE

W3-02

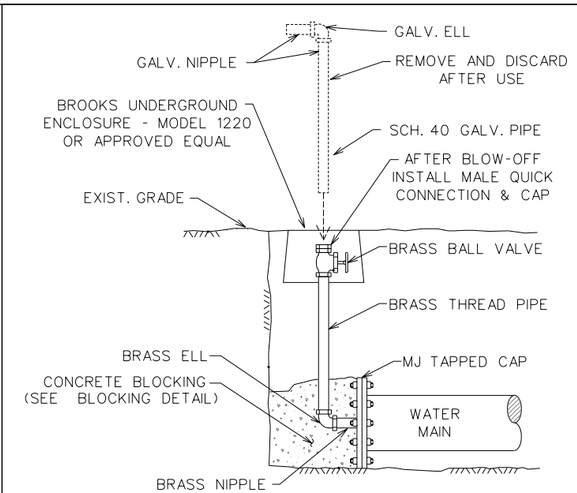

BLOW-OFF RISER

W3-03

REVISIONS:
Detail W3-02 - June 2005

BRYAN - COLLEGE STATION
STANDARD WATER DETAILS

CITY OF COLLEGE STATION

CITY OF BRYAN
The Good Life, Texas Style.™

DRAWN BY: RH
DATE: 01-01-05
SCALE: N T S
APPROVED: W.P.K.
FIGURE:
W3
SHEET 3 OF 4

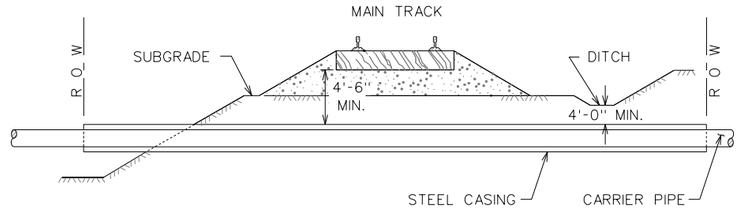

MACHINE BORING (TUNNELING IN EMBANKMENT)

MACHINE BORING (TUNNELING IN CUT)

NOTE:
1. FOR MORE INFORMATION ON WATER AND SEWER LINE CROSSING SEE CITY STANDARD SPECIFICATION FOR WATER AND SEWER LINE CONSTRUCTION.
2. STEEL CASING SHALL BE AS SPECIFIED IN THE TECHNICAL SPECIFICATIONS.
3. DRY BORING IS REQUIRED.

TYPICAL RAILROAD CROSSING

W4-00

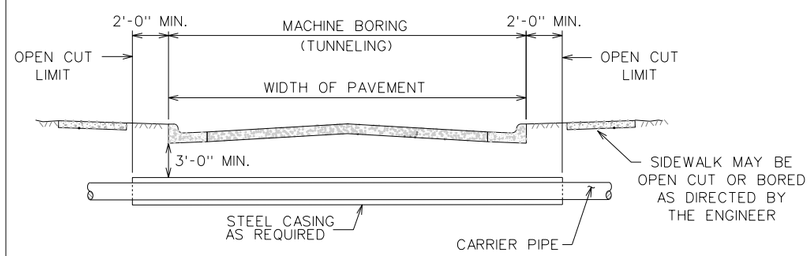

NOTE:
1. FOR MORE INFORMATION ON WATER AND SEWER LINE CROSSING SEE CITY STANDARD SPECIFICATION FOR WATER AND SEWER LINE CONSTRUCTION.
2. STEEL CASING SHALL BE AS SPECIFIED IN THE TECHNICAL SPECIFICATIONS.
3. DRY BORING PREFERRED, WET BORING ALLOWED ONLY WHEN APPROVED BY THE CITY ENGINEER.

TYPICAL CITY STREET CROSSING

W4-01

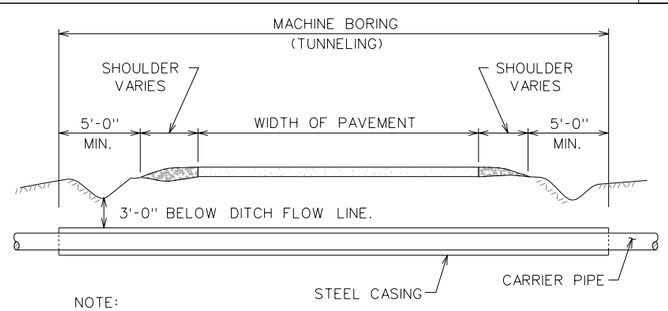

NOTE:
1. FOR MORE INFORMATION ON WATER AND SEWER LINE CROSSING SEE CITY STANDARD SPECIFICATION FOR WATER AND SEWER LINE CONSTRUCTION.
2. STEEL CASING SHALL BE AS SPECIFIED IN THE TECHNICAL SPECIFICATIONS.
3. DRY BORING IS REQUIRED.

TYPICAL STATE HIGHWAY OR MAIN THOROUGHFARE CROSSING

W4-02

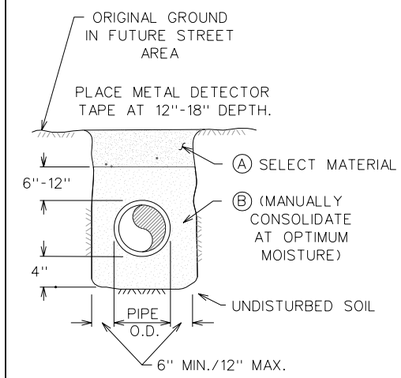

Ⓐ SELECT MATERIAL
MATERIAL EXCAVATED FROM THE DITCH, (WHICH IS FREE OF ROCKS, LUMPS, CLODS, OR DEBRIS LARGER THAN TWO (2) INCHES IN THE LARGEST DIMENSION), COMPACTED TO A MINIMUM OF 90% OF MAXIMUM DENSITY AS DETERMINED BY ASTM D698 (STANDARD) AT A MOISTURE CONTENT WITHIN OPTIMUM TO +4% OF OPTIMUM UNDER NON-STRUCTURAL AREAS (ie...YARDS, PASTURES, EASEMENTS) AND TO A MINIMUM OF 98% OF MAXIMUM DENSITY AS DETERMINED BY ASTM D698 (STANDARD) AT A MOISTURE CONTENT WITHIN OPTIMUM TO +4% OF OPTIMUM UNDER FUTURE STREET AREAS.

Ⓑ GRANULAR MATERIAL
MATERIAL SHALL BE BANK RUN RIVER SAND WHICH IS FREE OF DETRIMENTAL QUANTITIES OF CLAY, DEBRIS, OR ORGANIC MATERIAL AND WHICH, WHEN TESTED BY STANDARD LABORATORY METHODS, MEET THE FOLLOWING REQUIREMENTS:

MAXIMUM LIQUID LIMIT	45
MAXIMUM PLASTICITY INDEX	15
MAXIMUM PERCENT PASSING NO. 200 SIEVE	35
MINIMUM PERCENT PASSING 3/4" SIEVE	100

THE MATERIAL SHALL BE FREE FLOWING AND WHEN WET, SHALL NOT ADHERE TO FORM A BALL WHEN PRESSED IN THE HAND.

Ⓒ CEMENT STABILIZED SAND

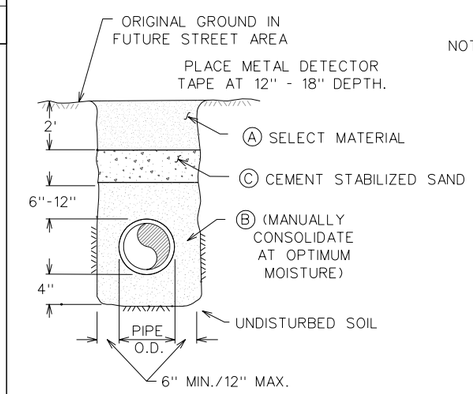

NOTES:
1. *FOR BEDDING AND TRENCHING WITHIN EXISTING STREET/ STRUCTURAL AREAS SEE DETAILS FOR OPEN CUT STREETS.*
2. All bedding & installation of PVC pipe shall be in accordance to ANSI/AWWA Standards for PVC Pipe.
3. All bedding & installation of Ductile Iron pipe shall be in accordance to ANSI/AWWA C150/A21.50.
4. Compaction shall be attained by mechanical tamping.
5. Relative compaction shall be tested in the presence of the City Engineer.
6. Dust resulting from the Contractor's performance of the work, either inside or outside the right of way, shall be controlled by the Contractor.
7. All trenches shall be back filled and temporary paving or plating placed at the end of each working day.
8. See "Open Cut Details" ST4-00, ST4-02 & ST4-02.

BEDDING AND TRENCH FOR DI PIPE & PVC PIPE WITHIN NON-STRUCTURAL OR FUTURE STREET AREAS

W4-03

GENERAL NOTES:

ALL AREAS WHERE EXISTING VEGETATION AND GRASS COVER HAVE BEEN BARED BY CONSTRUCTION SHALL BE ADEQUATELY BLOCK SODDED OR HYDROMULCHED AND WATERED UNTIL GROWTH IS ESTABLISHED. IN DEVELOPED AREAS WHERE GRASS IS PRESENT, BLOCK SOD WILL BE REQUIRED. BARED AREAS SHALL BE SEEDED OR SODDED WITHIN 14 CALENDAR DAYS OF LAST DISTURBANCE.

APPROVED EROSION CONTROL MEASURES MUST BE INSTALLED DURING THE ENTIRE TIME THAT EARTH HAS BEEN BARED BY CONSTRUCTION AND SHALL STAY IN PLACE UNTIL ACCEPTABLE VEGETATIVE GROWTH IS ESTABLISHED AFTER CONSTRUCTION IS COMPLETE AND THEN REMOVED BY CONTRACTOR.

ALL EROSION CONTROL MEASURES SHOULD BE CLEANED OF SILT AFTER EVERY RAIN.

ESTABLISHMENT OF VEGETATION MAY BE A WARRANTY ITEM.

REVISIONS:
Detail W4-03 - June 2005

BRYAN - COLLEGE STATION
STANDARD WATER DETAILS

CITY OF COLLEGE STATION

CITY OF BRYAN
The Good Life, Texas Style.™

DRAWN BY: RJ
DATE: 01-01-05
SCALE: N T S
APPROVED: W.P.K.
FIGURE:
W4
SHEET 4 OF 4

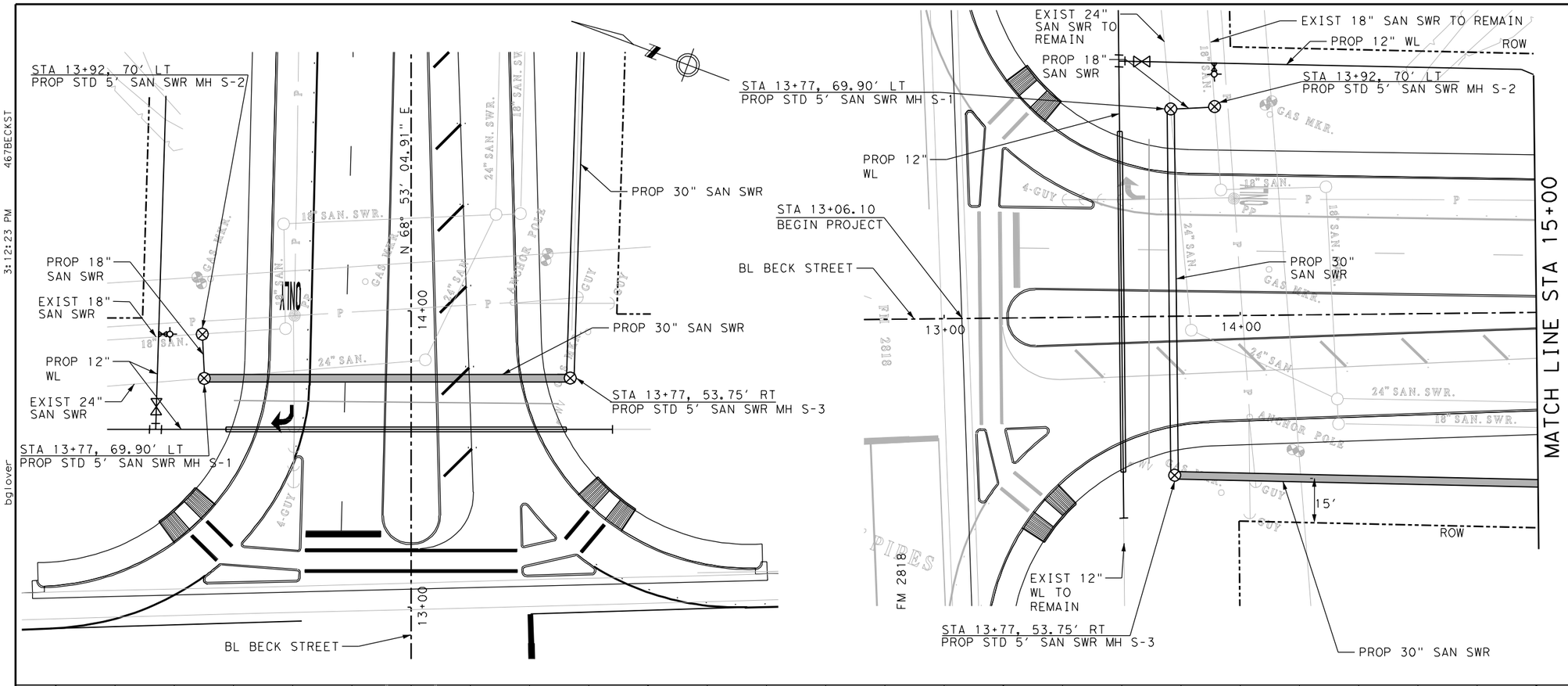

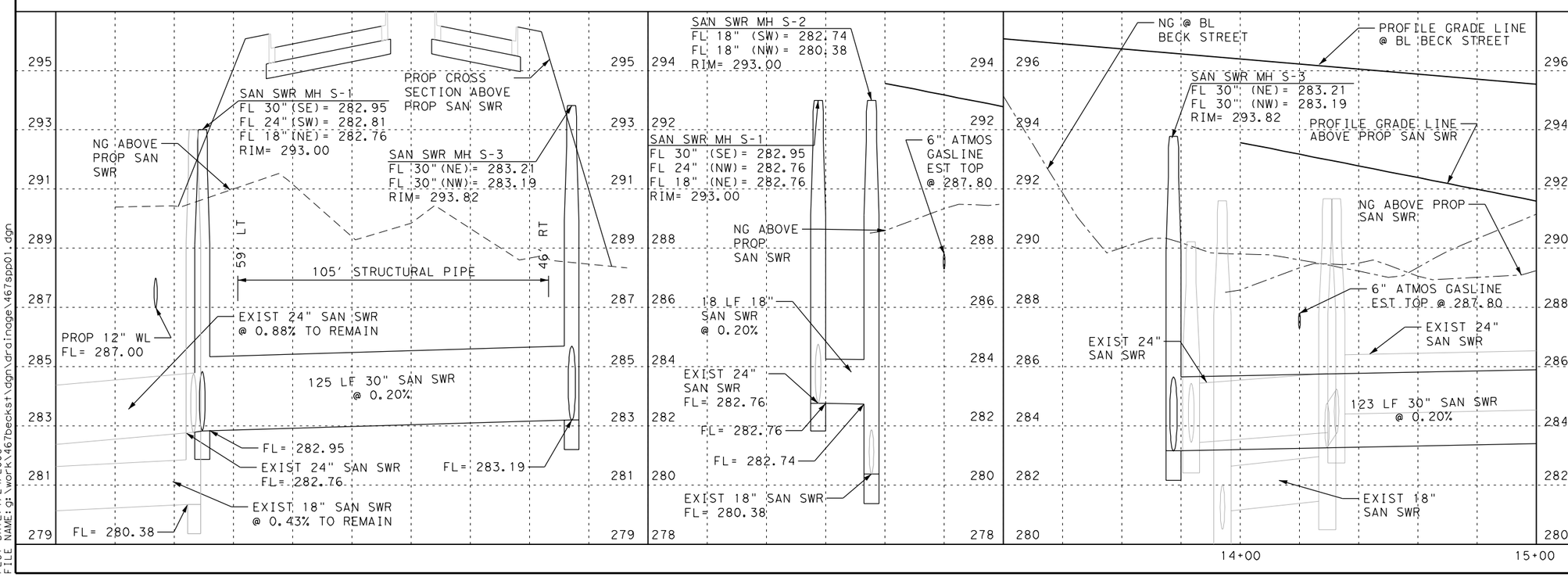

STATE OF TEXAS
MICHAEL A. MARTIN
63282
REGISTERED PROFESSIONAL ENGINEER

THE SEAL APPEARING ON THIS DOCUMENT WAS AUTHORIZED BY MICHAEL A. MARTIN, P.E. 63282 ON 1/23/2006

Epsilon Engineering, Inc.
526 E. UNIVERSITY, 201A / COLLEGE STATION, TEXAS 77840
(979) 764-9119 / eei@epsilonengr.com

CITY OF BRYAN ENGINEERING SERVICES

BECK STREET

BECK STREET SANITARY SEWER PLAN & PROFILE STA 10+00 TO STA 15+00

SHEET 1 OF 15

DESIGN:	MAM	DATE:	SHEET NO.
DESIGN CK:	MAM	1/24/2006	303
DRAWN:	BAG		
DRAW CK:	MAM		

467BECKST
3:12:23 PM
bglover
PLOT DATE: 1/24/2006
FILE NAME: g:\work\467becks1\dgn\drainage\467spp01.dgn

467BECKST
3:12:25 PM
bglover

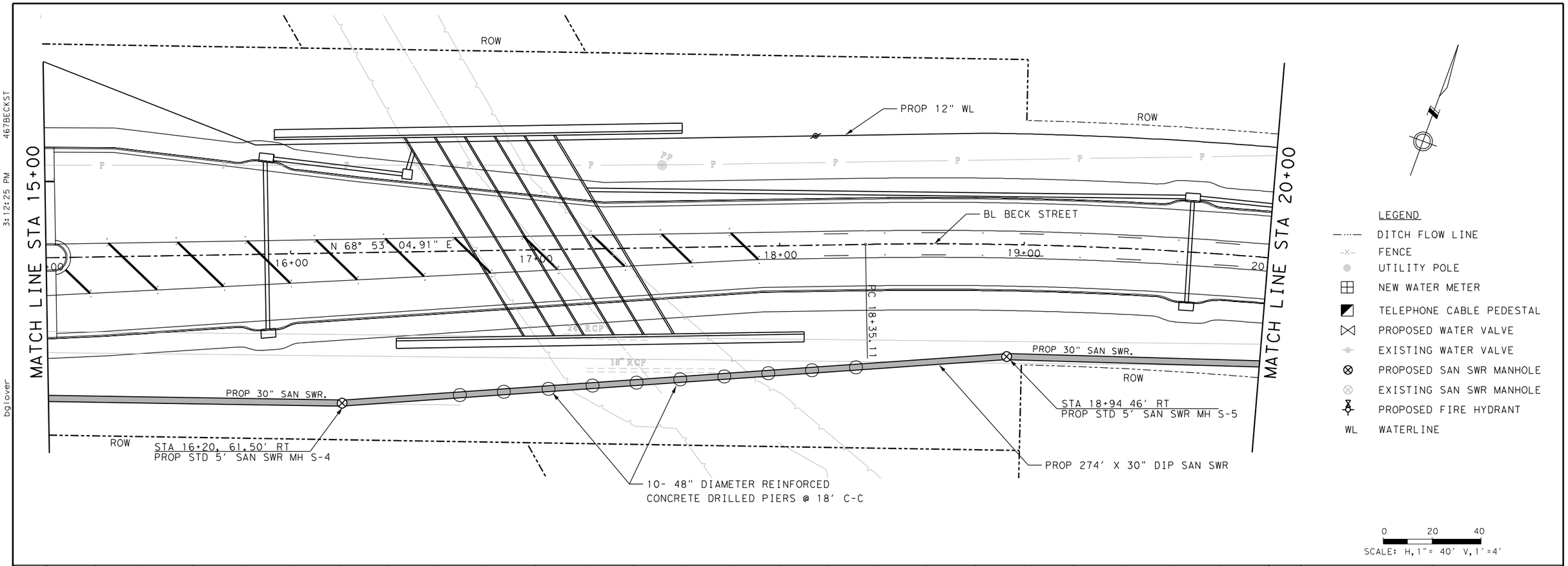

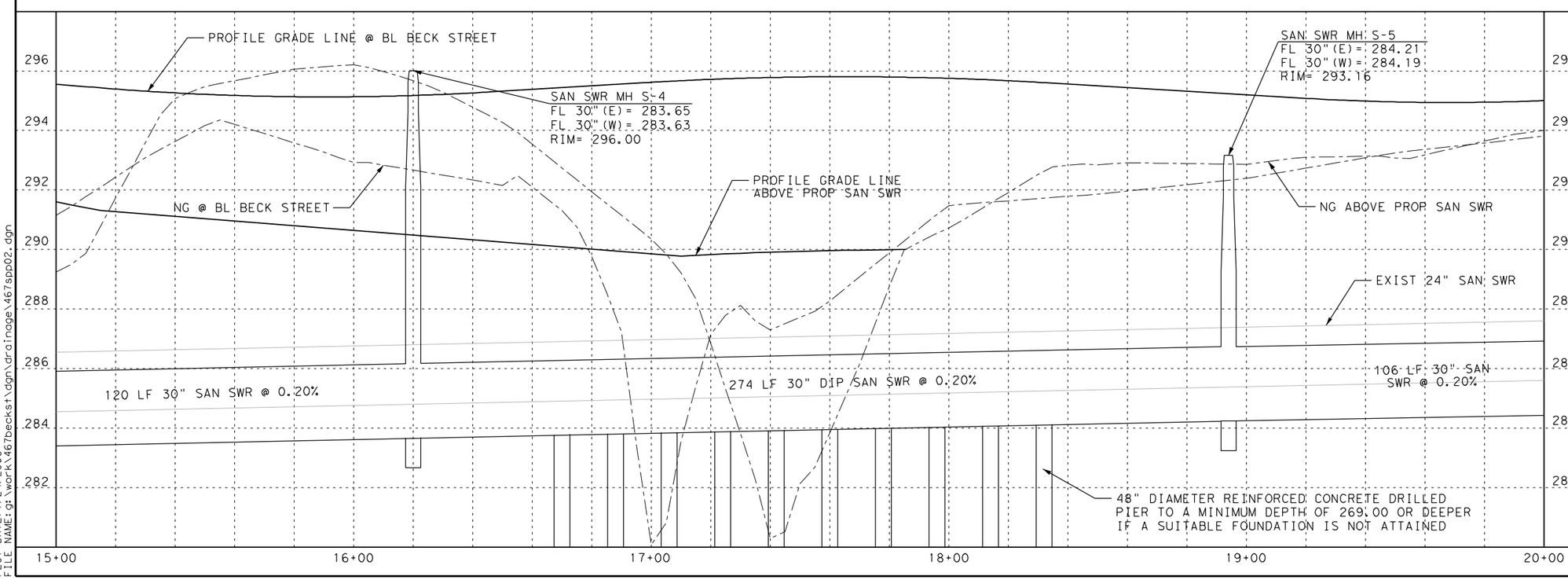

STATE OF TEXAS
MICHAEL A. MARTIN
63282
REGISTERED PROFESSIONAL ENGINEER

THE SEAL APPEARING ON THIS DOCUMENT WAS AUTHORIZED BY MICHAEL A. MARTIN, P.E. 63282 ON 1/23/2006

Epsilon Engineering, Inc.
526 E. UNIVERSITY, 201A / COLLEGE STATION, TEXAS 77840
(979) 764-9119 / eei@epsilonengr.com

CITY OF BRYAN
ENGINEERING
SERVICES

BECK STREET

BECK STREET SANITARY SEWER PLAN & PROFILE STA 15+00 TO STA 20+00

SHEET 2 OF 15

DESIGN:	MAM	DATE:	SHEET NO.
DESIGN CK:	MAM	1/24/2006	304
DRAWN:	BAG		
DRAW CK:	MAM		

PLOT DATE: 1/24/2006
FILE NAME: g:\work\467becks1\dgn\drainage\467spp02.dgn

467BECKST
3:12:26 PM
bglover

MATCH LINE STA 20+00

MATCH LINE STA 25+00

ROW

PROP 12" WL

BL BECK STREET

N 84° 14' 42.25" E

21+00 22+00 23+00 24+00 25

PT 22+82.55

24" SAN. SWR. 24" SAN. SWR. 18" SAN. SWR. 24" SAN. SWR. 24" SAN. SWR. 24" SAN. SWR. 24" SAN. SWR.

PROP 30" SAN SWR.

ROW

7.24'

STA STA 24+60, 42' RT
PROP STD 5' SAN SWR MH S-7

PROP 13 LF- 6" SAN SWR
TIE TO EXIST 6" SAN SWR
W/ FERNCO COUPLING
OR APPROVED EQUAL

EXIST 6" SAN SWR

STA 21+04, 34.75' RT
PROP STD 5' SAN SWR DROP MH S-6

LEGEND

- DITCH FLOW LINE
- FENCE
- UTILITY POLE
- NEW WATER METER
- TELEPHONE CABLE PEDESTAL
- PROPOSED WATER VALVE
- EXISTING WATER VALVE
- PROPOSED SAN SWR MANHOLE
- EXISTING SAN SWR MANHOLE
- PROPOSED FIRE HYDRANT
- WL WATERLINE

0 20 40
SCALE: H,1"= 40' V,1'=4'

SAN SWR MH S-6
FL 30"(E)= 287.11
FL 30"(W)= 284.61
RIM= 296.00

EXIST MH TO
BE REMOVED

EXIST 24"
SAN SWR

36 LF 30"
SAN SWR
@ 0.38%

104 LF 30" SAN SWR
@ 0.20%

NG @ BL BECK STREET

NG ABOVE PROP SAN SWR

PROFILE GRADE LINE
@ BL BECK STREET

EXIST MH TO
BE REMOVED

EXIST 24" SAN SWR

320 LF 30" SAN SWR
@ 0.38%

SAN SWR MH S-7
FL 30"(E)= 288.49
FL 30"(W)= 288.47
FL 6"(SE)= 290.55
RIM= 302.55

EXIST MH TO
BE REMOVED

6" SAN SWR

EXIST 24"
SAN SWR

40 LF 30"
SAN SWR @
0.10%

298 296 294 292 290 288 286 284

298 296 294 292 288 286 284

302 300 298 296 294 292 290 288

302 300 298 296 294 292 290 288

20+00 21+00 22+00 23+00 24+00 25+00

STATE OF TEXAS
MICHAEL A. MARTIN
63282
REGISTERED
PROFESSIONAL ENGINEER

THE SEAL APPEARING ON THIS DOCUMENT WAS AUTHORIZED BY MICHAEL A. MARTIN, P.E. 63282 ON 1/23/2006

Epsilon Engineering, Inc.
526 E. UNIVERSITY, 201A / COLLEGE STATION, TEXAS 77840
(979) 764-9119 / eei@epsilonengr.com

CITY OF BRYAN
ENGINEERING
SERVICES

BECK STREET

BECK STREET
SANITARY SEWER
PLAN & PROFILE
STA 20+00 TO STA 25+00

SHEET 3 OF 15

DESIGN:	MAM	DATE:	SHEET NO.
DESIGN CK:	MAM	1/24/2006	305
DRAWN:	BAG		
DRAW CK:	MAM		

PLOT DATE: 1/24/2006
FILE NAME: g:\work\467becks1\dgn\drainage\467spp03.dgn

467BECKST
3:12:27 PM
bglover

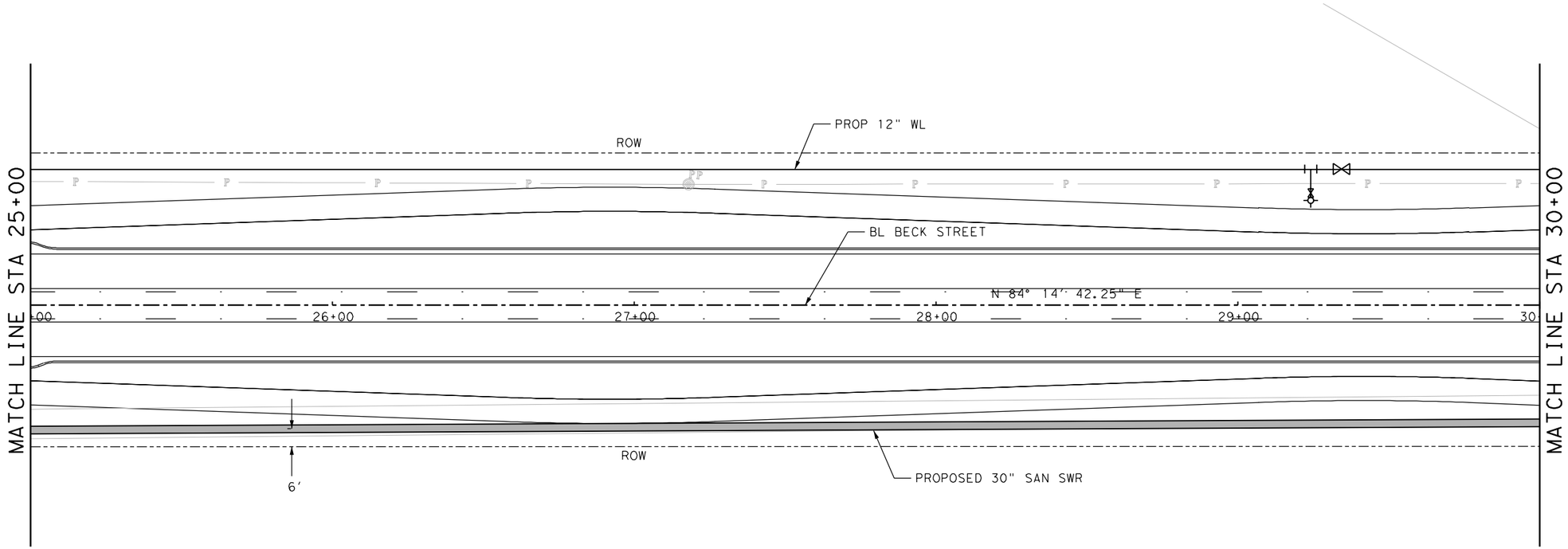

LEGEND

- DITCH FLOW LINE
- FENCE
- UTILITY POLE
- NEW WATER METER
- TELEPHONE CABLE PEDESTAL
- PROPOSED WATER VALVE
- EXISTING WATER VALVE
- PROPOSED SAN SWR MANHOLE
- EXISTING SAN SWR MANHOLE
- PROPOSED FIRE HYDRANT
- WL WATERLINE

0 20 40
SCALE: H, 1" = 40' V, 1' = 4'

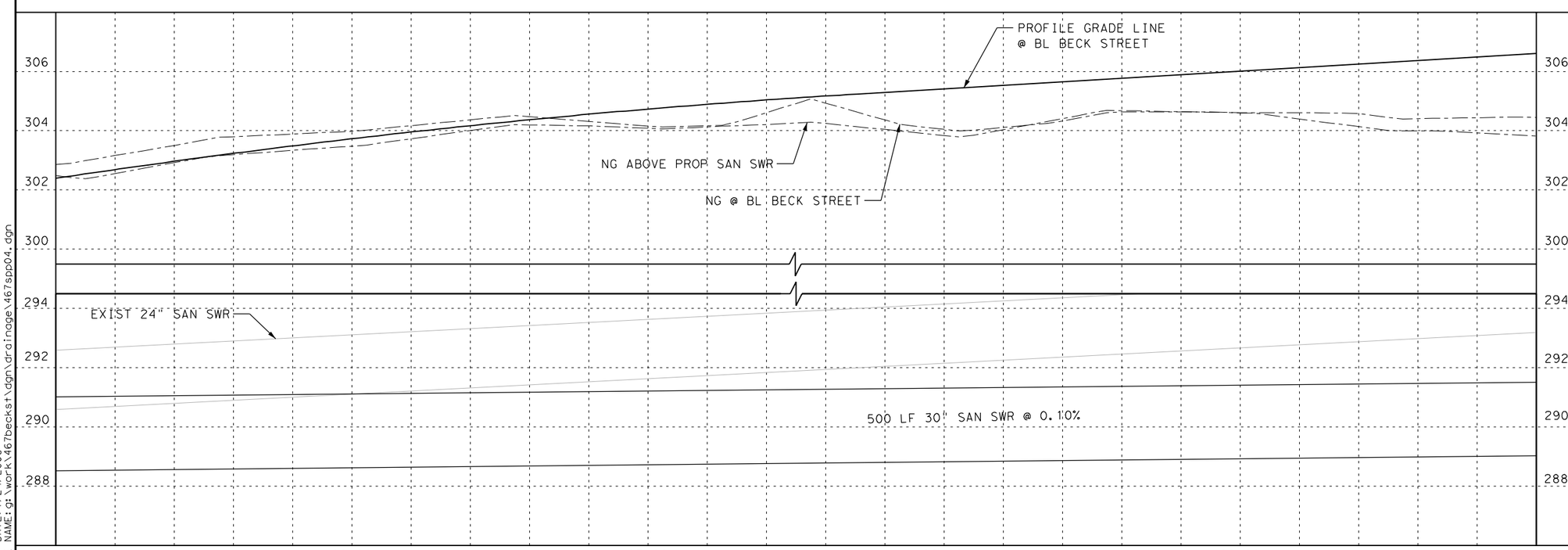

STATE OF TEXAS
MICHAEL A. MARTIN
63282
REGISTERED
PROFESSIONAL ENGINEER

THE SEAL APPEARING ON THIS DOCUMENT WAS AUTHORIZED BY MICHAEL A. MARTIN, P.E. 63282 ON 1/23/2006

Epsilon Engineering, Inc.
526 E. UNIVERSITY, 201A / COLLEGE STATION, TEXAS 77840
(979) 764-9119 / eei@epsilonengr.com

CITY OF BRYAN
ENGINEERING
SERVICES

BECK STREET

BECK STREET SANITARY SEWER PLAN & PROFILE STA 25+00 TO STA 30+00

SHEET 4 OF 15

DESIGN:	MAM	DATE:	SHEET NO.
DESIGN CK:	MAM	1/24/2006	306
DRAWN:	BAG		
DRAW CK:	MAM		

PLOT DATE: 1/24/2006
FILE NAME: g:\work\467becks1\dgn\drainage\467spp04.dgn

467BECKST
3:12:29 PM
bglover

PROP 13 LF 12" SAN SWR

STA 32+10.64, 53' LT
PROP STD 4' SAN SWR MH S-9

TIE TO EXISTING 12" SAN SWR W/ FERNCO COUPLING OR APPROVED EQUAL CONTRACTOR TO EXCAVATE AND VERIFY ELEVATION OF EXISTING PIPE PRIOR TO CONSTRUCTION

PROP 12" WL

ROW

MATCH LINE STA 30+00

MATCH LINE STA 35+00

BL BECK STREET

N 84° 14' 42.25" E

31+00 32+00 33+00 34+00

24" SAN. SWR.

18" SAN. SWR.

PROP 30" SAN SWR.

12" WATER LINE

TIE TO EXISTING 6" SAN SWR W/' FERNCO COUPLING OR APPROVED EQUAL. CONTRACTOR TO EXCAVATE AND VERIFY PRIOR TO CONSTRUCTION

PROP 133 LF 12" SAN SWR

STA 31+11, 39' RT
PROP STD 5' SAN SWR DROP MH S-8

PROP 13 LF 12" SAN SWR

LEGEND

- DITCH FLOW LINE
- FENCE
- UTILITY POLE
- NEW WATER METER
- TELEPHONE CABLE PEDESTAL
- PROPOSED WATER VALVE
- EXISTING WATER VALVE
- PROPOSED SAN SWR MANHOLE
- EXISTING SAN SWR MANHOLE
- PROPOSED FIRE HYDRANT
- WL WATERLINE

0 20 40
SCALE: H,1"= 40' V,1'=4'

306 304 302 300 296 294 292 290

PROFILE GRADE LINE @ BL BECK STREET

SAN SWR MANHOLE S-9
FL 12" (NE)= 294.86
FL 12"(SW)= 294.84
RIM= 305.60

NG @ BL BECK STREET

PROFILE GRADE LINE ABOVE PROP. SAN SWR

NG ABOVE PROP SAN SWR

SAN SWR MANHOLE S-8
FL 30" (E)= 289.16
FL 30"(W)= 289.14
FL 6" (SW)= 294.60
FL 12" (NE)= 294.50
RIM= 304.63

PROP 134 LF 12" SAN SWR @ 0.25%

EXIST 12" WL
TOP EST= 299.80
CONTRACTOR TO EXCAVATE AND VERIFY PRIOR TO SAN SWR CONSTRUCTION

EXIST MH TO BE REMOVED

EXIST 24" SAN SWR

PROP 13 LF 6" SAN SWR @ 0.80%

PROP 13 LF 12" SAN SWR @ 0.25%

EXIST 24" SAN SWR

EXIST 18" SAN SWR

111 LF 30" SAN SWR @ 0.10%

389 LF 30" SAN SWR @ 0.10%

30+00 31+00 32+00 33+00 34+00 35+00

STATE OF TEXAS
MICHAEL A. MARTIN
63282
REGISTERED PROFESSIONAL ENGINEER

THE SEAL APPEARING ON THIS DOCUMENT WAS AUTHORIZED BY MICHAEL A. MARTIN, P.E. 63282 ON 1/23/2006

Epsilon Engineering, Inc.
526 E. UNIVERSITY, 201A / COLLEGE STATION, TEXAS 77840
(979) 764-9119 / eei@epsilonengr.com

CITY OF BRYAN ENGINEERING SERVICES

BECK STREET

BECK STREET SANITARY SEWER PLAN & PROFILE STA 30+00 TO STA 35+00

SHEET 5 OF 15

DESIGN:	MAM	DATE:	SHEET NO.
DESIGN CK:	MAM	1/24/2006	307
DRAWN:	BAG		
DRAW CK:	MAM		

PLOT DATE: 1/24/2006
FILE NAME: g:\work\467becks1\dgn\drainage\467spp05.dgn

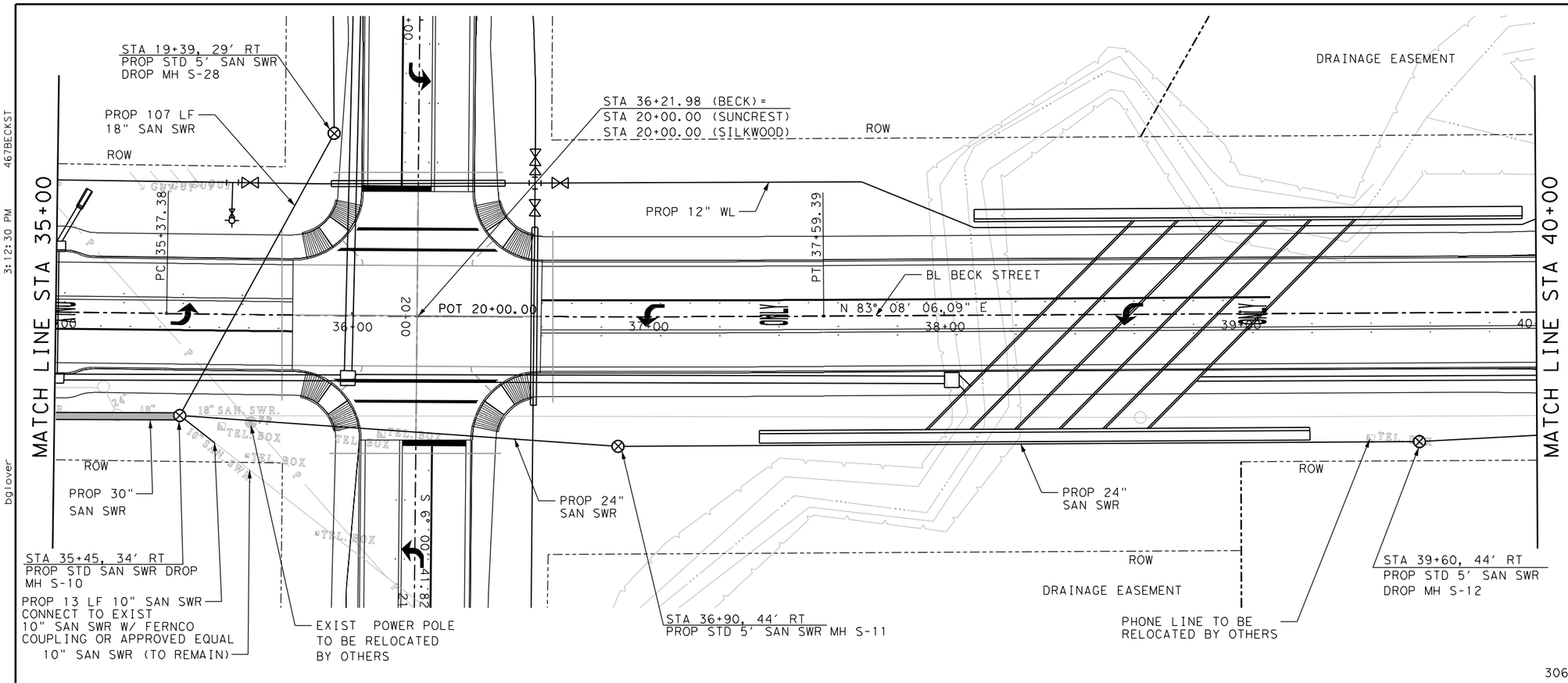

LEGEND

- DITCH FLOW LINE
- FENCE
- UTILITY POLE
- NEW WATER METER
- TELEPHONE CABLE PEDESTAL
- PROPOSED WATER VALVE
- EXISTING WATER VALVE
- PROPOSED SAN SWR MANHOLE
- EXISTING SAN SWR MANHOLE
- PROPOSED FIRE HYDRANT
- WL WATERLINE

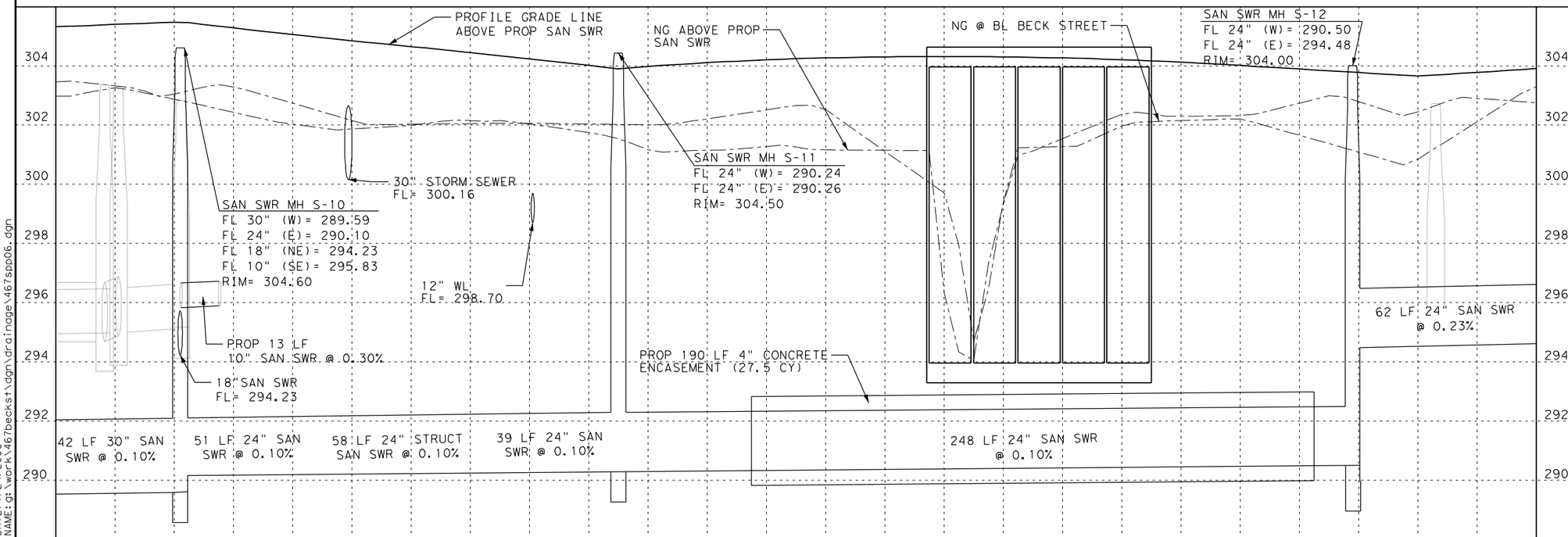

STATE OF TEXAS
MICHAEL A. MARTIN
63282
REGISTERED PROFESSIONAL ENGINEER

THE SEAL APPEARING ON THIS DOCUMENT WAS AUTHORIZED BY MICHAEL A. MARTIN, P.E. 63282 ON 1/23/2006

Epsilon Engineering, Inc.
526 E. UNIVERSITY, 201A / COLLEGE STATION, TEXAS 77840
(979) 764-9119 / eei@epsilonengr.com

CITY OF BRYAN
ENGINEERING
SERVICES

BECK STREET

BECK STREET SANITARY SEWER PLAN & PROFILE STA 35+00 TO STA 40+00

SHEET 6 OF 15

DESIGN:	MAM	DATE:	SHEET NO.
DESIGN CK:	MAM	1/24/2006	308
DRAWN:	BAG		
DRAW CK:	MAM		

467BECKST
3:12:30 PM
bglover
PLOT DATE: 1/24/2006
FILE NAME: g:\work\467becks~1\dgn\drainage\467spp06.dgn

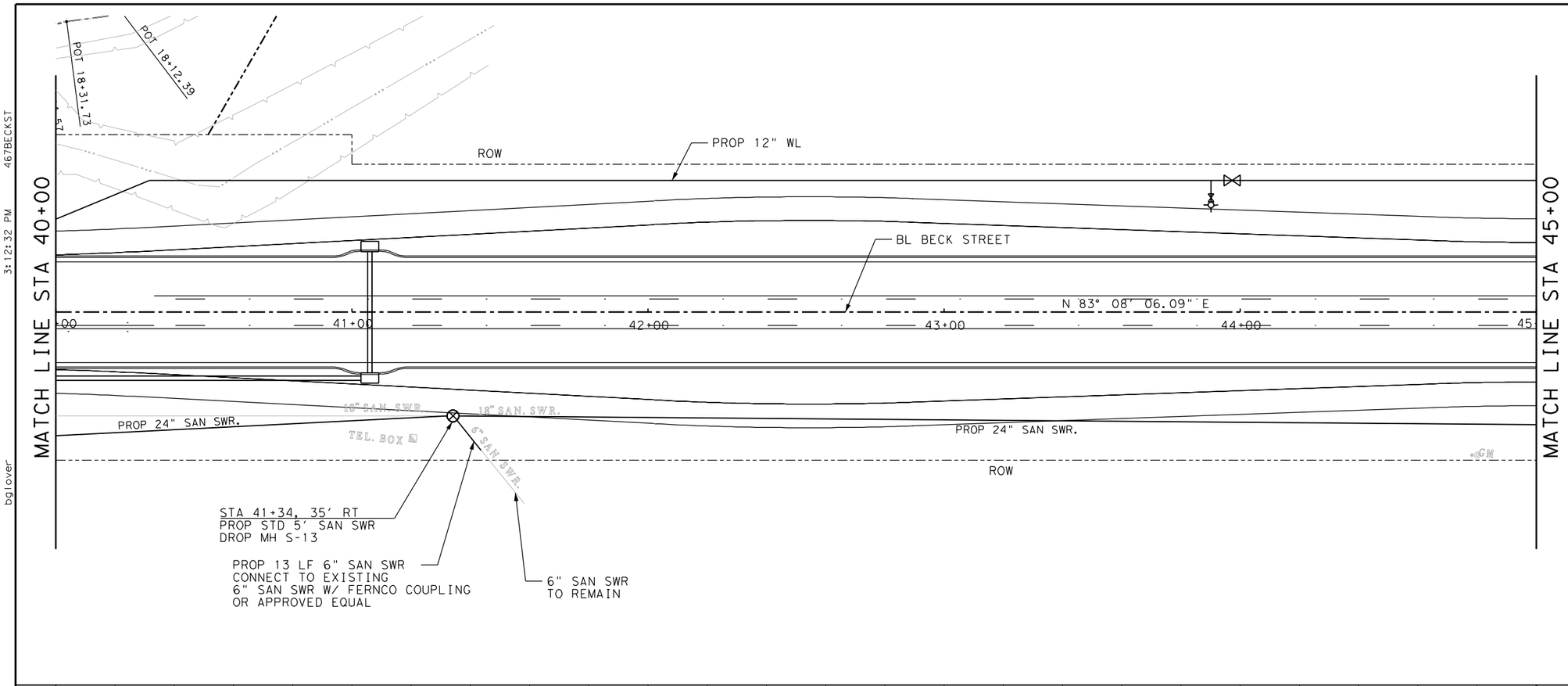

LEGEND

- DITCH FLOW LINE
- FENCE
- UTILITY POLE
- NEW WATER METER
- TELEPHONE CABLE PEDESTAL
- PROPOSED WATER VALVE
- EXISTING WATER VALVE
- PROPOSED SAN SWR MANHOLE
- EXISTING SAN SWR MANHOLE
- PROPOSED FIRE HYDRANT
- WL WATERLINE

0 20 40

SCALE: H, 1" = 40' V, 1' = 4'

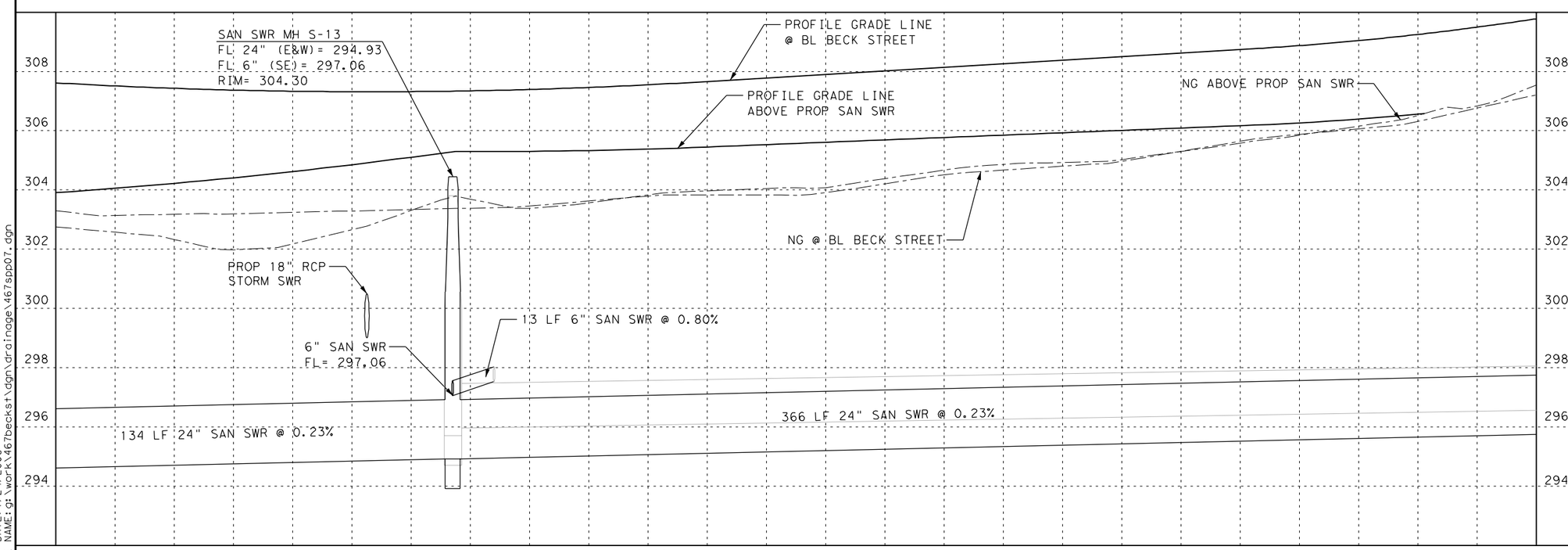

STATE OF TEXAS
MICHAEL A. MARTIN
63282
REGISTERED PROFESSIONAL ENGINEER

THE SEAL APPEARING ON THIS DOCUMENT WAS AUTHORIZED BY MICHAEL A. MARTIN, P.E. 63282 ON 1/23/2006

Epsilon Engineering, Inc.
526 E. UNIVERSITY, 201A / COLLEGE STATION, TEXAS 77840
(979) 764-9119 / eei@epsilonengr.com

CITY OF BRYAN ENGINEERING SERVICES

BECK STREET

BECK STREET SANITARY SEWER PLAN & PROFILE STA 40+00 TO STA 45+00

SHEET 7 OF 15

DESIGN:	MAM	DATE:	SHEET NO.
DESIGN CK:	MAM	1/24/2006	309
DRAWN:	BAG		
DRAW CK:	MAM		

467BECKST
3:12:32 PM
bglover
PLOT DATE: 1/24/2006
FILE NAME: g:\work\467becks1\dgn\drainage\467spp07.dgn

467BECKST
3:12:33 PM
bglover

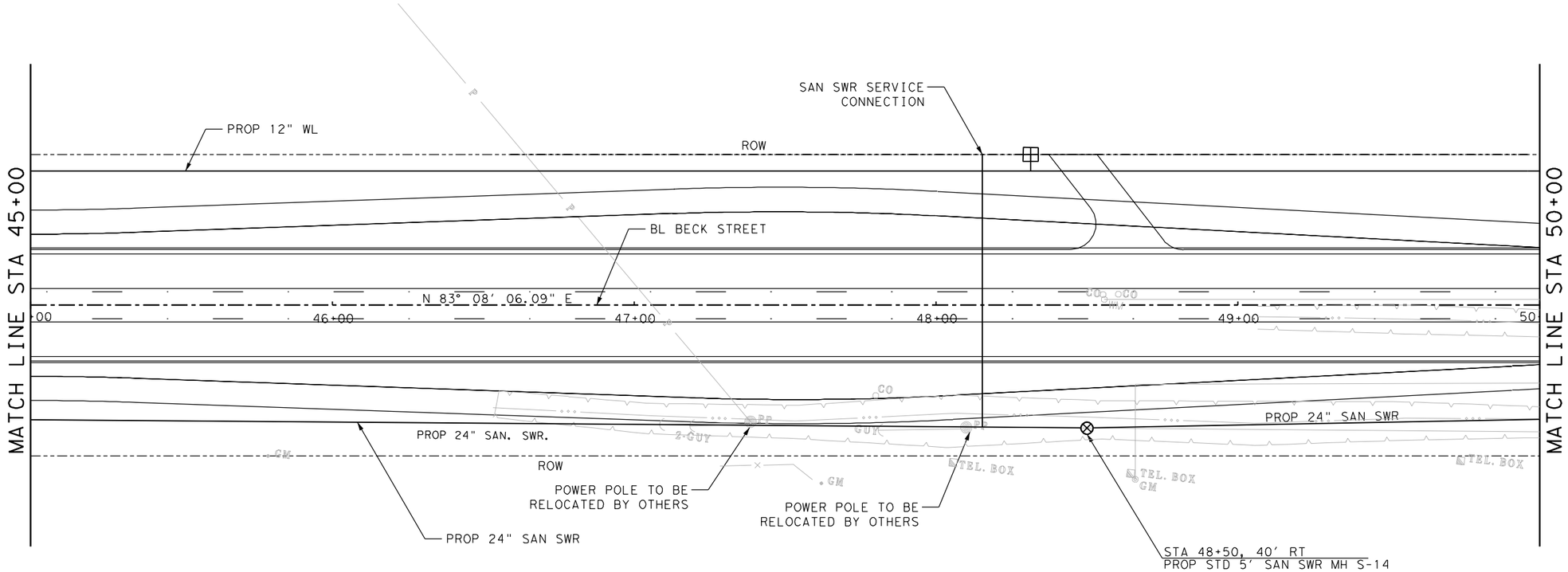

LEGEND

- DITCH FLOW LINE
- FENCE
- UTILITY POLE
- NEW WATER METER
- TELEPHONE CABLE PEDESTAL
- PROPOSED WATER VALVE
- EXISTING WATER VALVE
- PROPOSED SAN SWR MANHOLE
- EXISTING SAN SWR MANHOLE
- PROPOSED FIRE HYDRANT
- WL WATERLINE

0 20 40
SCALE: H, 1" = 40' V, 1' = 4'

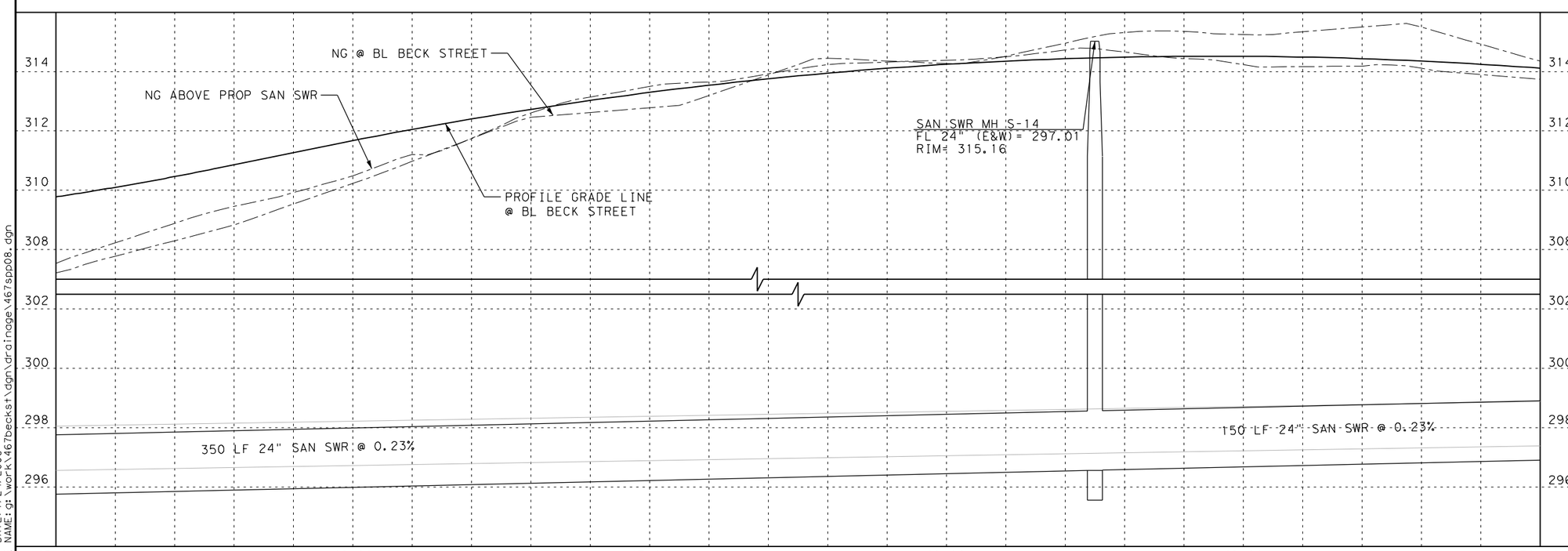

STATE OF TEXAS
MICHAEL A. MARTIN
63282
REGISTERED PROFESSIONAL ENGINEER

THE SEAL APPEARING ON THIS DOCUMENT WAS AUTHORIZED BY MICHAEL A. MARTIN, P.E. 63282 ON 1/23/2006

Epsilon Engineering, Inc.
526 E. UNIVERSITY, 201A / COLLEGE STATION, TEXAS 77840
(979) 764-9119 / eei@epsilonengr.com

CITY OF BRYAN ENGINEERING SERVICES

BECK STREET

BECK STREET SANITARY SEWER PLAN & PROFILE STA 45+00 TO STA 50+00

SHEET 8 OF 15

DESIGN:	MAM	DATE:	SHEET NO.
DESIGN CK:	MAM	1/24/2006	310
DRAWN:	BAG		
DRAW CK:	MAM		

PLOT DATE: 1/24/2006
FILE NAME: g:\work\467becks1\dgn\drainage\467spp08.dgn

467BECKST
3:12:35 PM
bglover

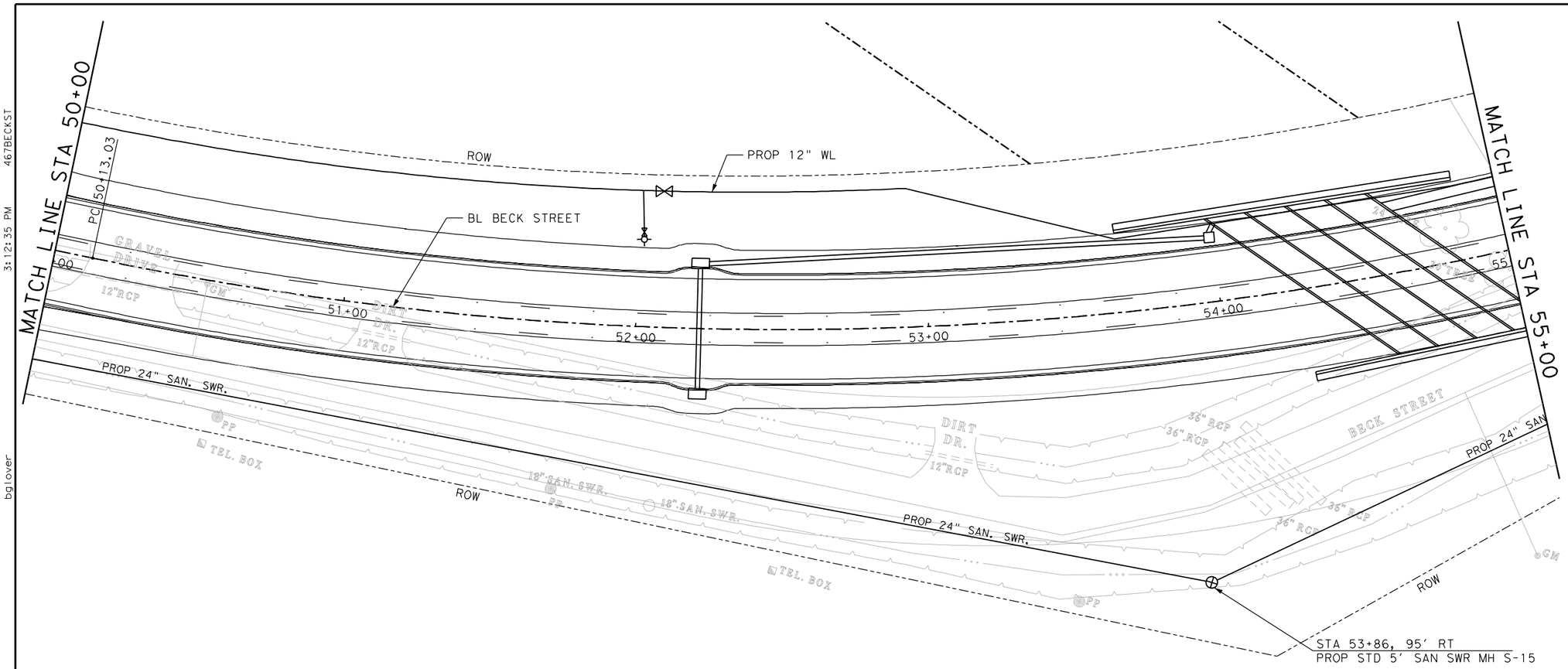

LEGEND

- DITCH FLOW LINE
- FENCE
- UTILITY POLE
- NEW WATER METER
- TELEPHONE CABLE PEDESTAL
- PROPOSED WATER VALVE
- EXISTING WATER VALVE
- PROPOSED SAN SWR MANHOLE
- EXISTING SAN SWR MANHOLE
- PROPOSED FIRE HYDRANT
- WL WATERLINE

0 20 40
SCALE: H, 1" = 40' V, 1' = 4'

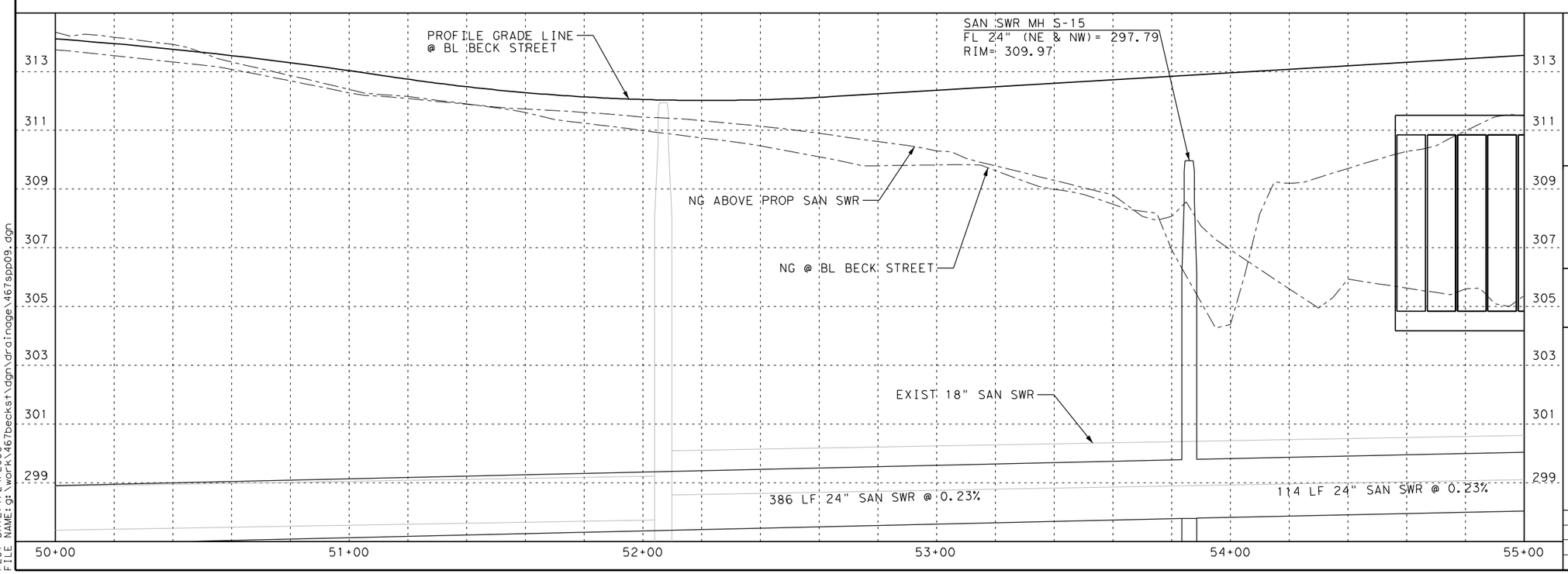

STATE OF TEXAS
MICHAEL A. MARTIN
63282
REGISTERED PROFESSIONAL ENGINEER

THE SEAL APPEARING ON THIS DOCUMENT WAS AUTHORIZED BY MICHAEL A. MARTIN, P.E. 63282 ON 1/23/2006

Epsilon Engineering, Inc.
526 E. UNIVERSITY, 201A / COLLEGE STATION, TEXAS 77840
(979) 764-9119 / eei@epsilonengr.com

CITY OF BRYAN ENGINEERING SERVICES

BECK STREET

BECK STREET SANITARY SEWER PLAN & PROFILE STA 50+00 TO STA 55+00

SHEET 9 OF 15

DESIGN:	MAM	DATE:	SHEET NO.
DESIGN CK:	MAM	1/24/2006	311
DRAWN:	BAG		
DRAW CK:	MAM		

PLOT DATE: 1/24/2006
FILE NAME: g:\work\467beckst\dgn\drainage\467spp09.dgn

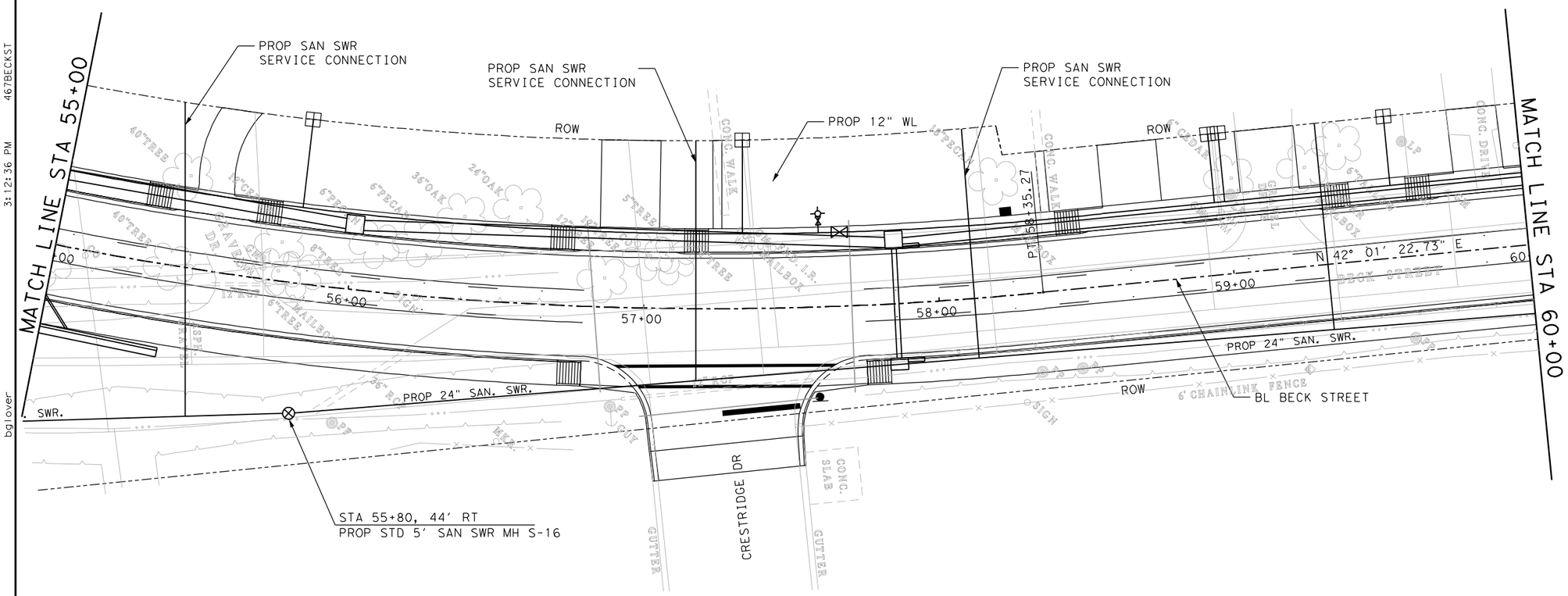

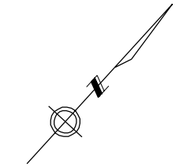

LEGEND

- DITCH FLOW LINE
- FENCE
- UTILITY POLE
- NEW WATER METER
- TELEPHONE CABLE PEDESTAL
- PROPOSED WATER VALVE
- EXISTING WATER VALVE
- PROPOSED SAN SWR MANHOLE
- EXISTING SAN SWR MANHOLE
- PROPOSED FIRE HYDRANT
- WL WATERLINE

0 20 40

SCALE: H,1"= 40' V,1'=4'

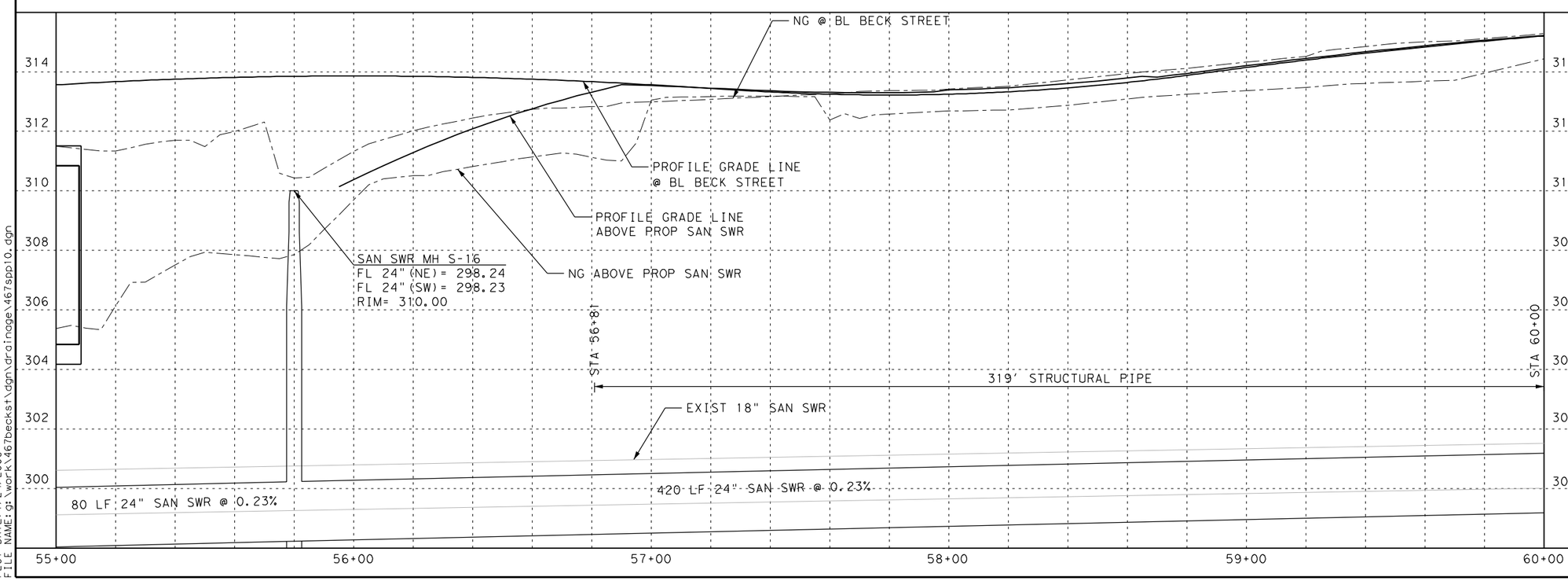

STATE OF TEXAS
MICHAEL A. MARTIN
63282
REGISTERED PROFESSIONAL ENGINEER

THE SEAL APPEARING ON THIS DOCUMENT WAS AUTHORIZED BY MICHAEL A. MARTIN, P.E. 63282 ON 1/23/2006

Epsilon Engineering, Inc.
526 E. UNIVERSITY, 201A / COLLEGE STATION, TEXAS 77840
(979) 764-9119 / eei@epsilonengr.com

CITY OF BRYAN ENGINEERING SERVICES

BECK STREET

BECK STREET SANITARY SEWER PLAN & PROFILE STA 55+00 TO STA 60+00

SHEET 10 OF 15

DESIGN:	MAM	DATE:	SHEET NO.
DESIGN CK:	MAM	1/24/2006	312
DRAWN:	BAG		
DRAW CK:	MAM		

467BECKST 3:12:36 PM bglover

PLOT DATE: 1/24/2006
FILE NAME: g:\work\467becks1\dgn\drainage\467spp10.dgn

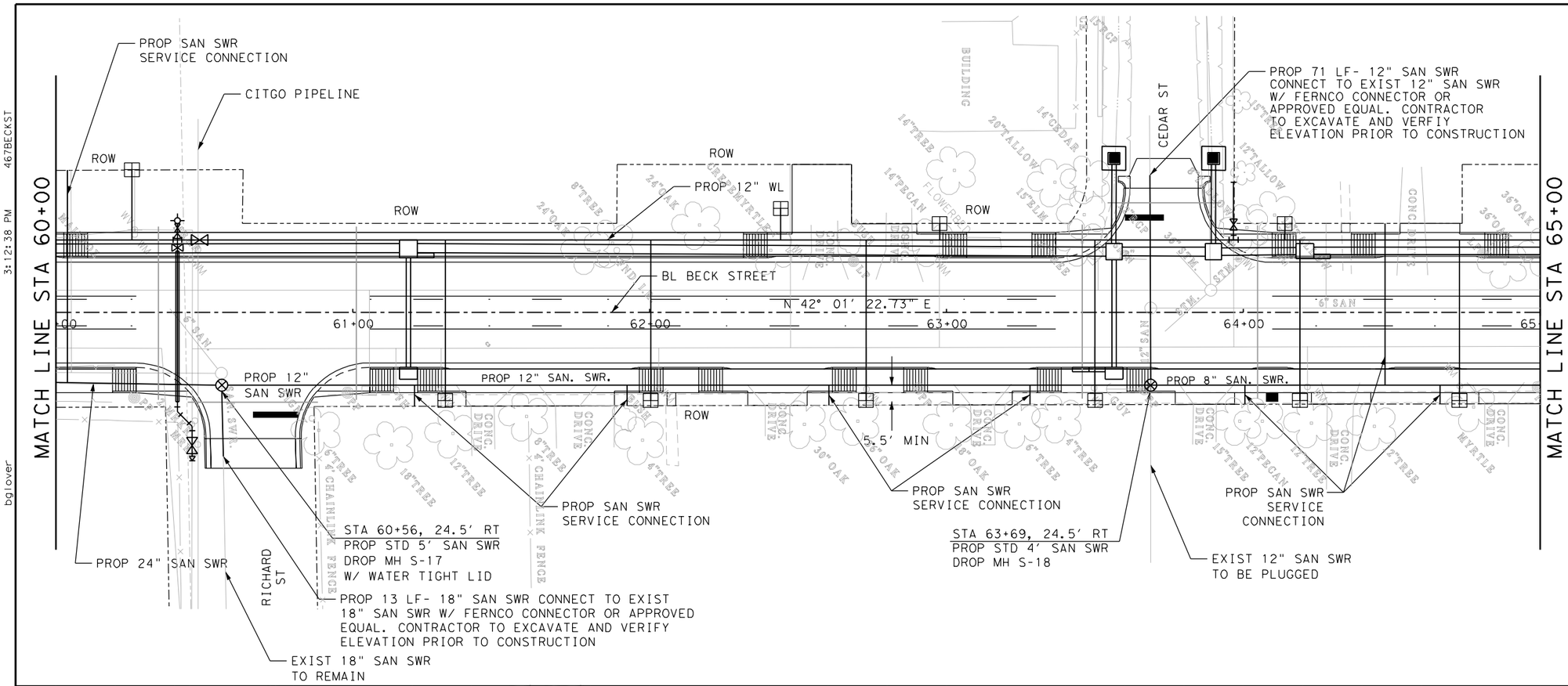

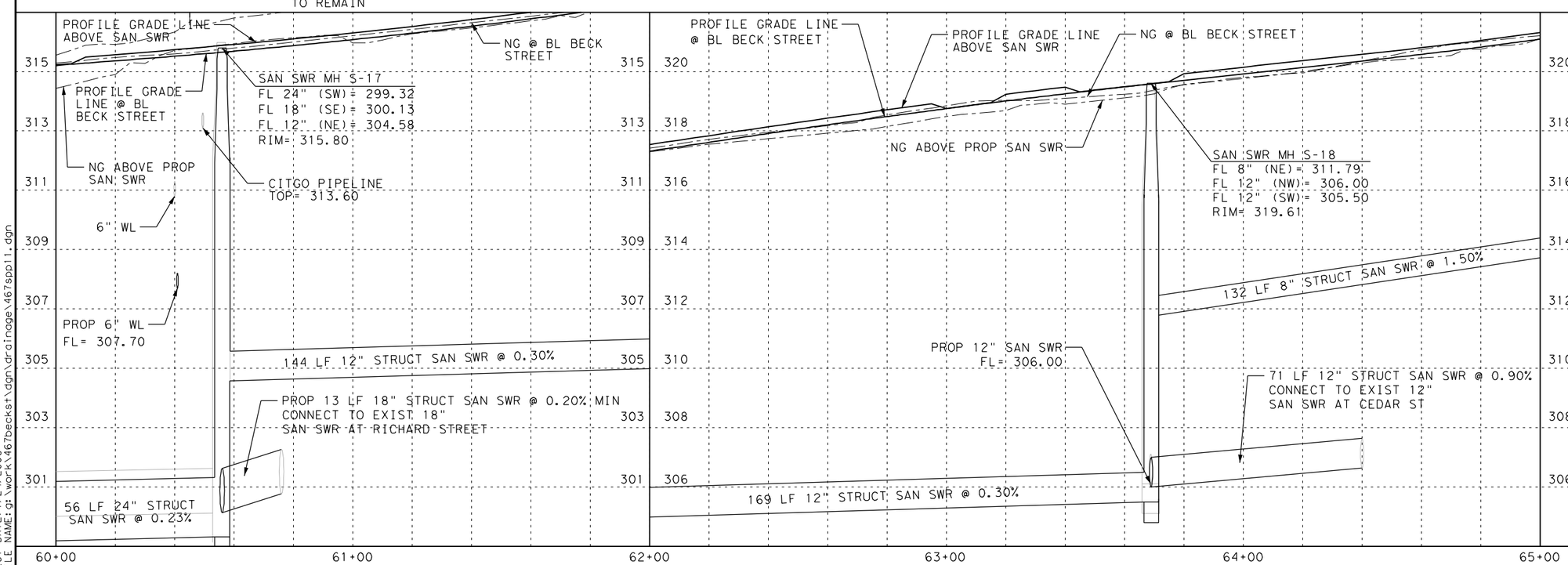

STATE OF TEXAS
MICHAEL A. MARTIN
63282
REGISTERED PROFESSIONAL ENGINEER

THE SEAL APPEARING ON THIS DOCUMENT WAS AUTHORIZED BY MICHAEL A. MARTIN, P.E. 63282 ON 1/23/2006

Epsilon Engineering, Inc.
526 E. UNIVERSITY, 201A / COLLEGE STATION, TEXAS 77840
(979) 764-9119 / eei@epsilonengr.com

CITY OF BRYAN ENGINEERING SERVICES

BECK STREET

BECK STREET SANITARY SEWER PLAN & PROFILE STA 60+00 TO STA 65+00

SHEET 11 OF 15

DESIGN:	MAM	DATE:	SHEET NO.
DESIGN CK:	MAM	1/24/2006	313
DRAWN:	BAG		
DRAW CK:	MAM		

467BECKST 3:12:38 PM bglover

PLOT DATE: 1/24/2006
FILE NAME: g:\work\467becks1\dgn\drainage\467spp11.dgn

467BECKST
3:12:39 PM
bglover

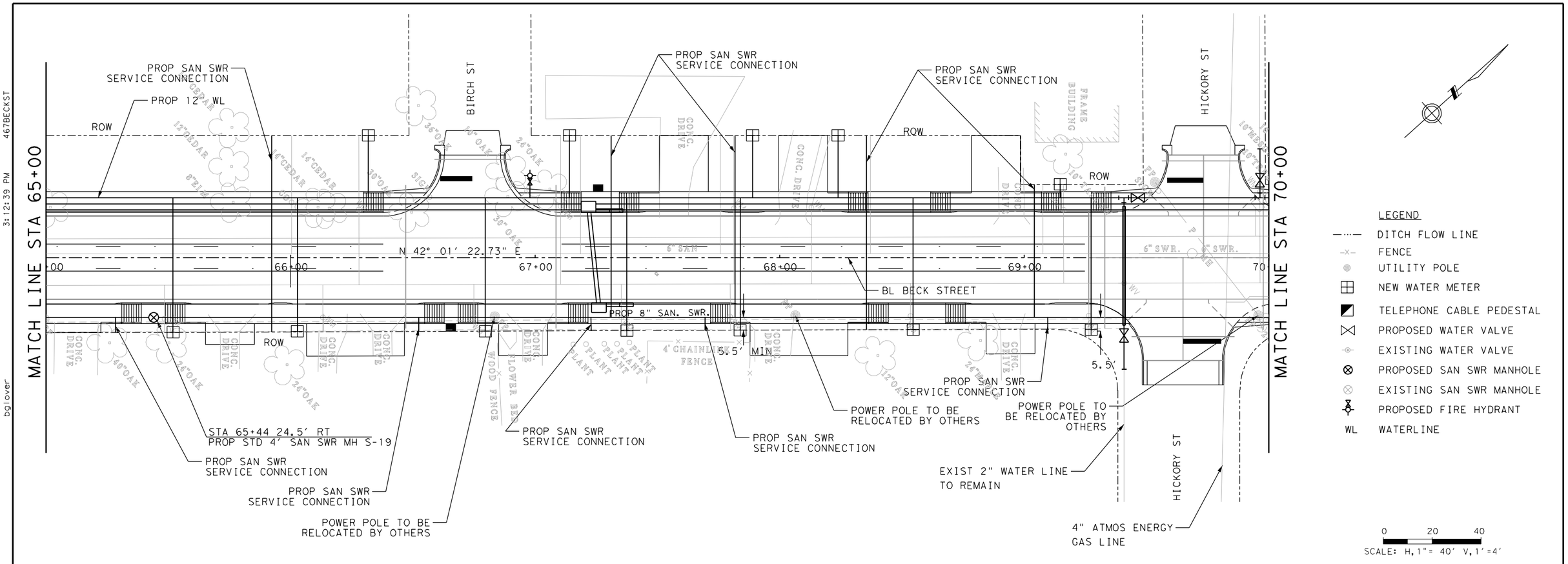

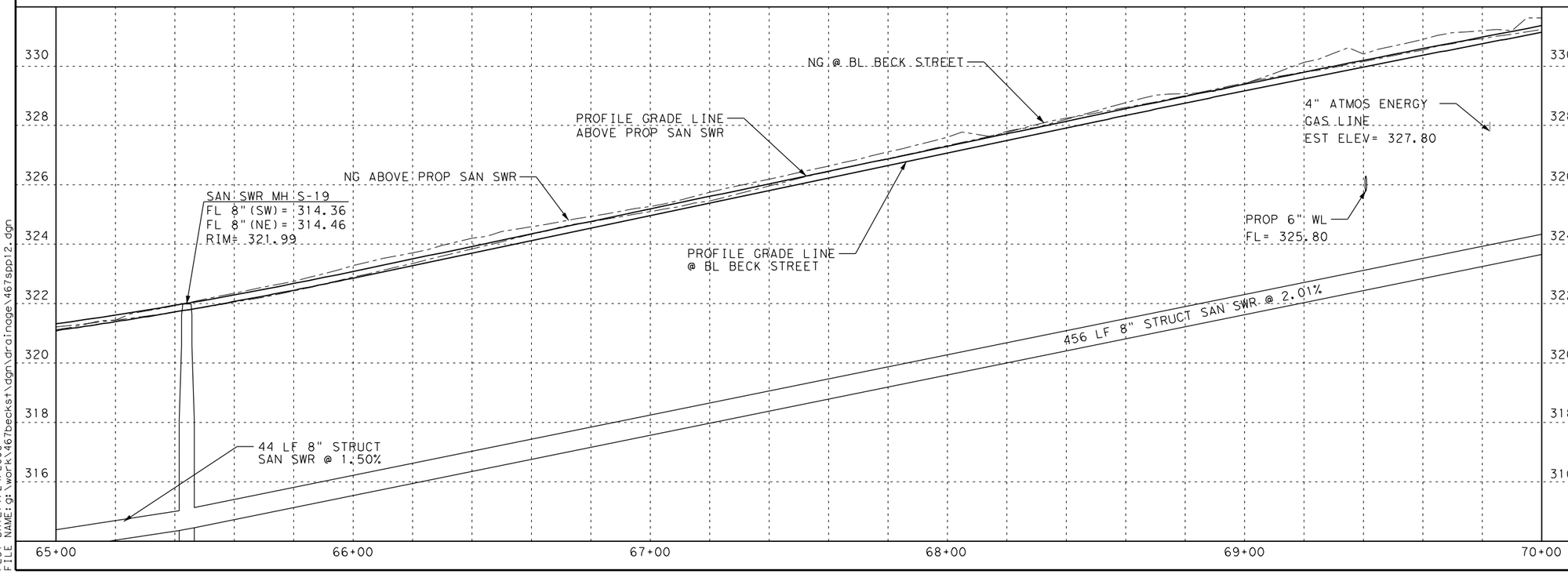

STATE OF TEXAS
MICHAEL A. MARTIN
63282
REGISTERED PROFESSIONAL ENGINEER

THE SEAL APPEARING ON THIS DOCUMENT WAS AUTHORIZED BY MICHAEL A. MARTIN, P.E. 63282 ON 1/23/2006

Epsilon Engineering, Inc.
526 E. UNIVERSITY, 201A / COLLEGE STATION, TEXAS 77840
(979) 764-9119 / eei@epsilonengr.com

CITY OF BRYAN ENGINEERING SERVICES

BECK STREET

BECK STREET SANITARY SEWER PLAN & PROFILE STA 65+00 TO STA 70+00

SHEET 12 OF 15

DESIGN:	MAM	DATE:	SHEET NO.
DESIGN CK:	MAM	1/24/2006	314
DRAWN:	BAG		
DRAW CK:	MAM		

PLOT DATE: 1/24/2006
FILE NAME: g:\work\467beckst\dgn\drainage\467spp12.dgn

467BECKST
3:12:41 PM
bglover

MATCH LINE STA 70+00

PROP SAN SWR SERVICE CONNECTION
PROP SAN SWR SERVICE CONNECTION
PROP 12" WL
ROW
BL BECK STREET
71+00
72+00
73+00
74+00
N 42°, 01' 22.73" E
HAZEL ST
HAZEL ST
ROW
ROW
PROP 8" SAN.
PROP 8" SAN SWR
STA 70+44, 24.5' RT
PROP STD 4' SAN SWR MH S-20
POWER POLE TO BE RELOCATED BY OTHERS
PROP SAN SWR SERVICE CONNECTION
POWER POLE TO BE RELOCATED BY OTHERS
PROP SAN SWR SERVICE CONNECTION
POWER POLE TO BE RELOCATED BY OTHERS

MATCH LINE STA 75+00

LEGEND

- DITCH FLOW LINE
- FENCE
- UTILITY POLE
- NEW WATER METER
- TELEPHONE CABLE PEDESTAL
- PROPOSED WATER VALVE
- EXISTING WATER VALVE
- PROPOSED SAN SWR MANHOLE
- EXISTING SAN SWR MANHOLE
- PROPOSED FIRE HYDRANT
- WL WATERLINE

0 20 40
SCALE: H, 1"= 40' V, 1'=4'

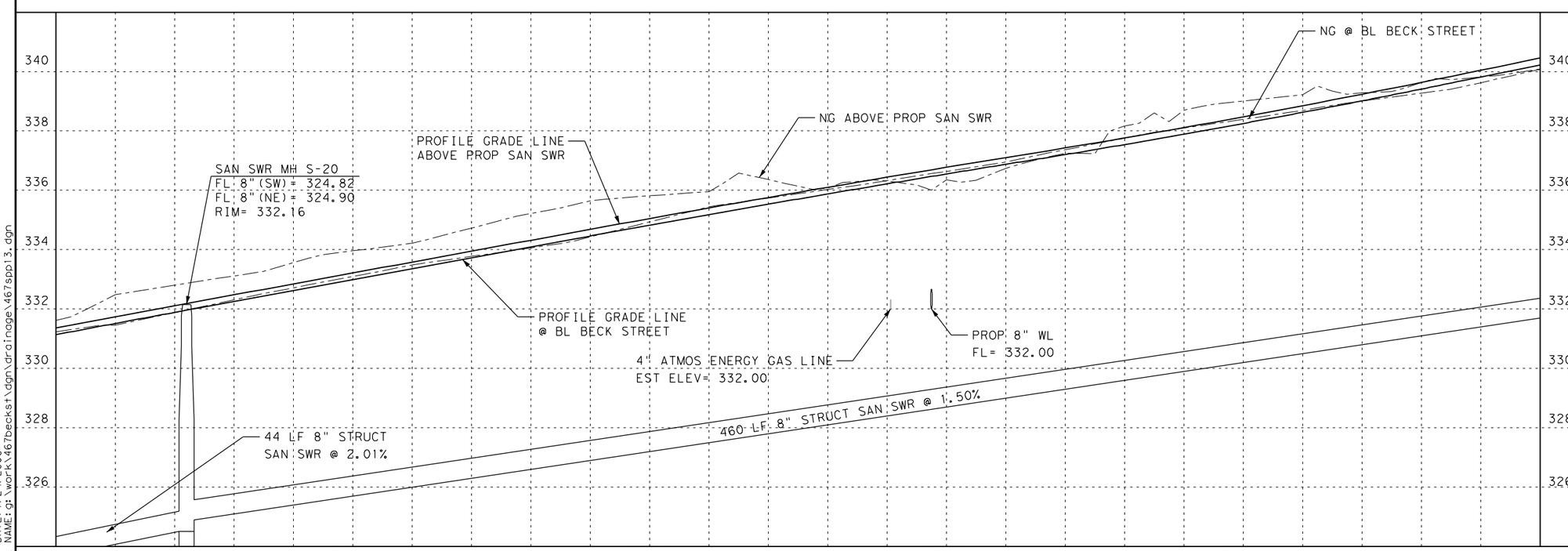

STATE OF TEXAS
MICHAEL A. MARTIN
63282
REGISTERED PROFESSIONAL ENGINEER

THE SEAL APPEARING ON THIS DOCUMENT WAS AUTHORIZED BY MICHAEL A. MARTIN, P.E. 63282 ON 1/23/2006

Epsilon Engineering, Inc.
526 E. UNIVERSITY, 201A / COLLEGE STATION, TEXAS 77840
(979) 764-9119 / eei@epsilonengr.com

CITY OF BRYAN ENGINEERING SERVICES

BECK STREET

BECK STREET SANITARY SEWER PLAN & PROFILE STA 70+00 TO STA 75+00

SHEET 13 OF 15

DESIGN:	MAM	DATE:	SHEET NO.
DESIGN CK:	MAM	1/24/2006	315
DRAWN:	BAG		
DRAW CK:	MAM		

PLOT DATE: 1/24/2006
FILE NAME: g:\work\467becks1\dgn\drainage\467spp13.dgn

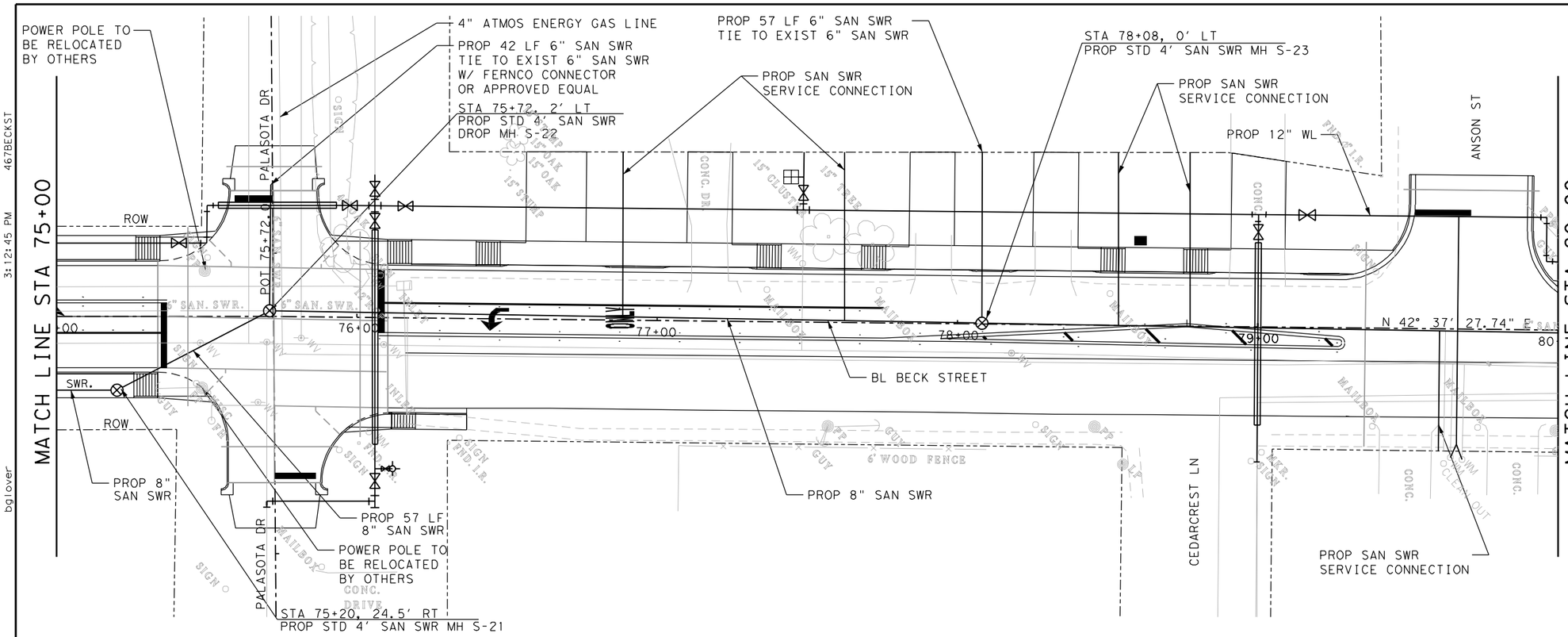

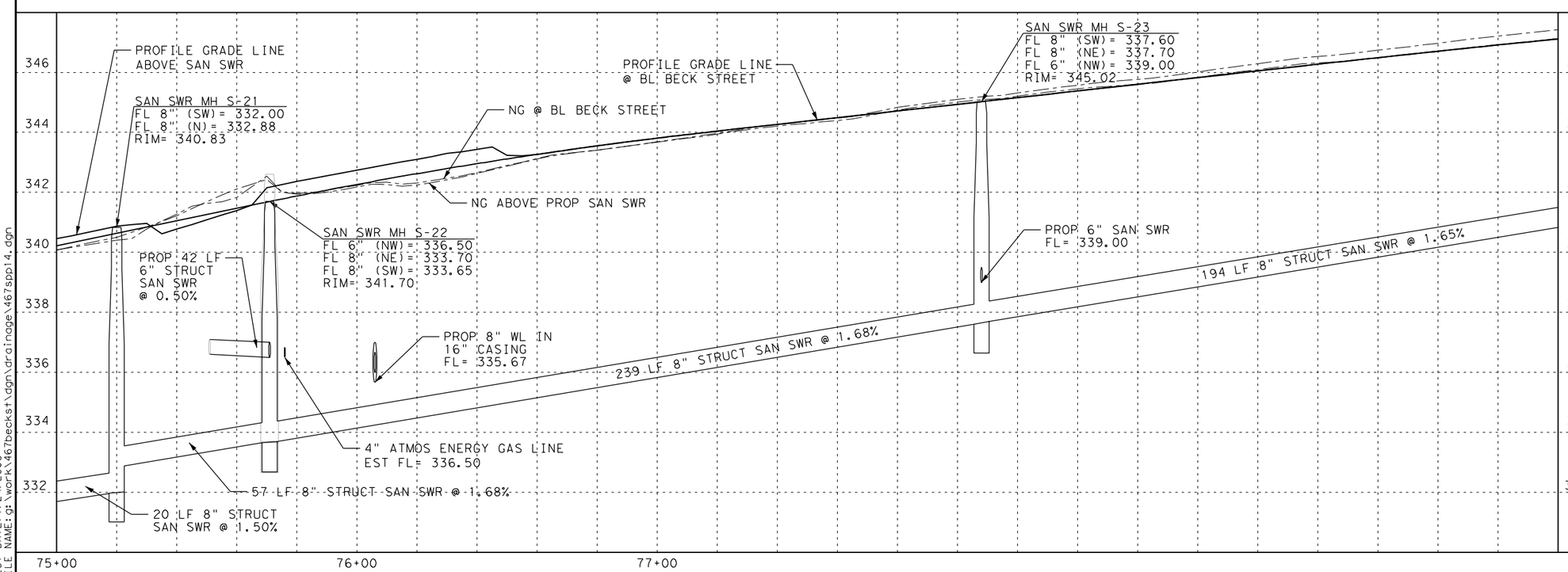

STATE OF TEXAS
MICHAEL A. MARTIN
63282
REGISTERED PROFESSIONAL ENGINEER

THE SEAL APPEARING ON THIS DOCUMENT WAS AUTHORIZED BY MICHAEL A. MARTIN, P.E. 63282 ON 1/23/2006

Epsilon Engineering, Inc.
526 E. UNIVERSITY, 201A / COLLEGE STATION, TEXAS 77840
(979) 764-9119 / eei@epsilonengr.com

CITY OF BRYAN ENGINEERING SERVICES

BECK STREET

BECK STREET SANITARY SEWER PLAN & PROFILE STA 75+00 TO STA 80+00

SHEET 14 OF 15

DESIGN:	MAM	DATE:	SHEET NO.
DESIGN CK:	MAM	1/24/2006	316
DRAWN:	BAG		
DRAW CK:	MAM		

467BECKST
3:12:45 PM
bglover
PLOT DATE: 1/24/2006
FILE NAME: g:\work\467becks1\dgn\drainage\467spp14.dgn

467BECKST
3:12:47 PM
bglover

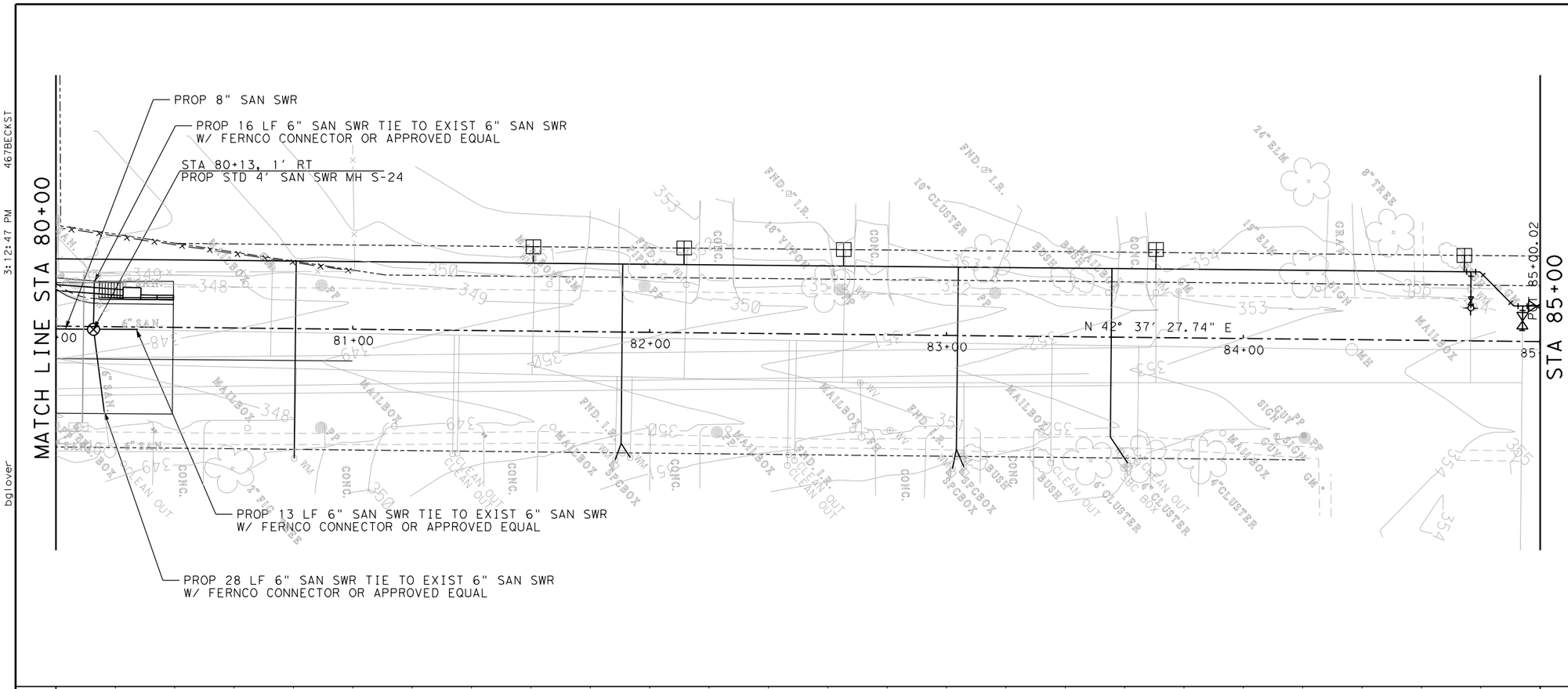

LEGEND

- DITCH FLOW LINE
- FENCE
- UTILITY POLE
- PROPOSED WATER METER
- TELEPHONE CABLE PEDESTAL
- PROPOSED WATER VALVE
- EXISTING WATER VALVE
- PROPOSED SAN SWR MANHOLE
- EXISTING SAN SWR MANHOLE
- PROPOSED FIRE HYDRANT
- PROPOSED MANHOLE
- TYPE H INLET
- TYPE C INLET
- RECESSED INLET
- PROPOSED PIPE
- PIER

0 20 40
SCALE: H, 1"= 40' V, 1'=4'

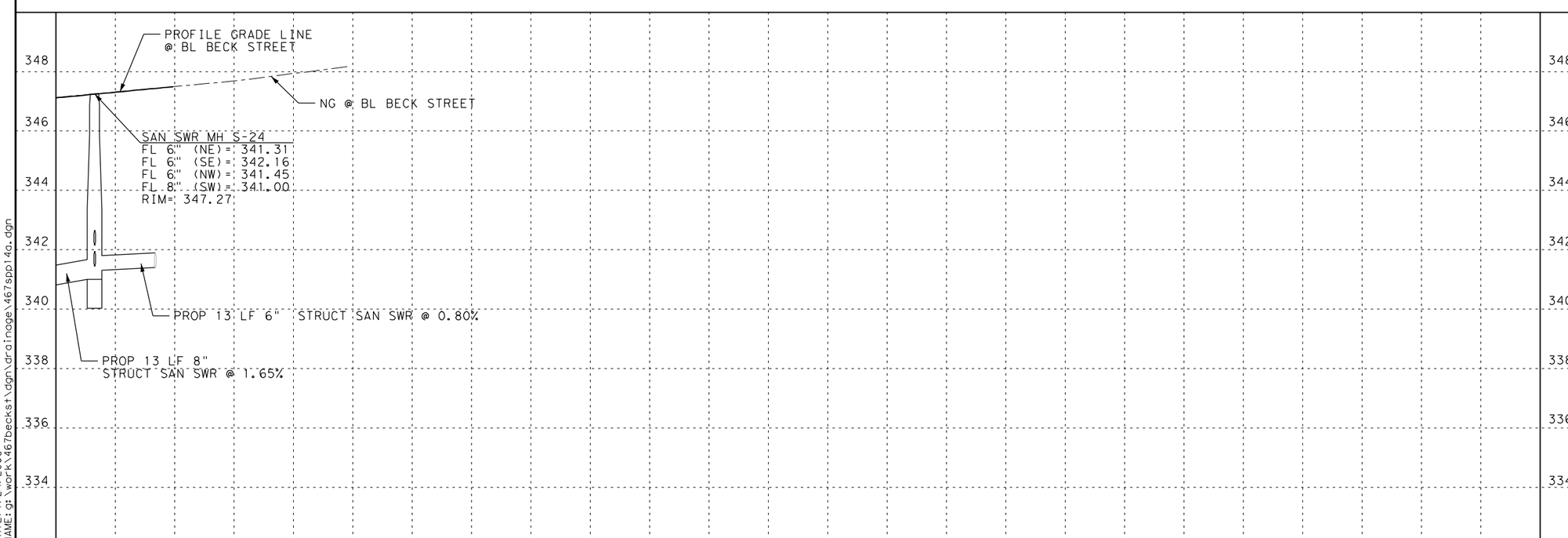

STATE OF TEXAS
MICHAEL A. MARTIN
63282
REGISTERED PROFESSIONAL ENGINEER

THE SEAL APPEARING ON THIS DOCUMENT WAS AUTHORIZED BY MICHAEL A. MARTIN, P.E. 63282 ON 1/23/2006

Epsilon Engineering, Inc.
526 E. UNIVERSITY, 201A / COLLEGE STATION, TEXAS 77840
(979) 764-9119 / eei@epsilonengr.com

CITY OF BRYAN
ENGINEERING
SERVICES

BECK STREET

BECK STREET
SANITARY SEWER
PLAN & PROFILE
STA 80+00 TO STA 85+00

SHEET 15 OF 15

DESIGN:	MAM	DATE:	SHEET NO.
DESIGN CK:	MAM	1/24/2006	317
DRAWN:	BAG		
DRAW CK:	MAM		

PLOT DATE: 1/24/2006
FILE NAME: g:\work\467becks1\dgn\drainage\467spp14a.dgn

467BECKST
3:12:49 PM
bglover

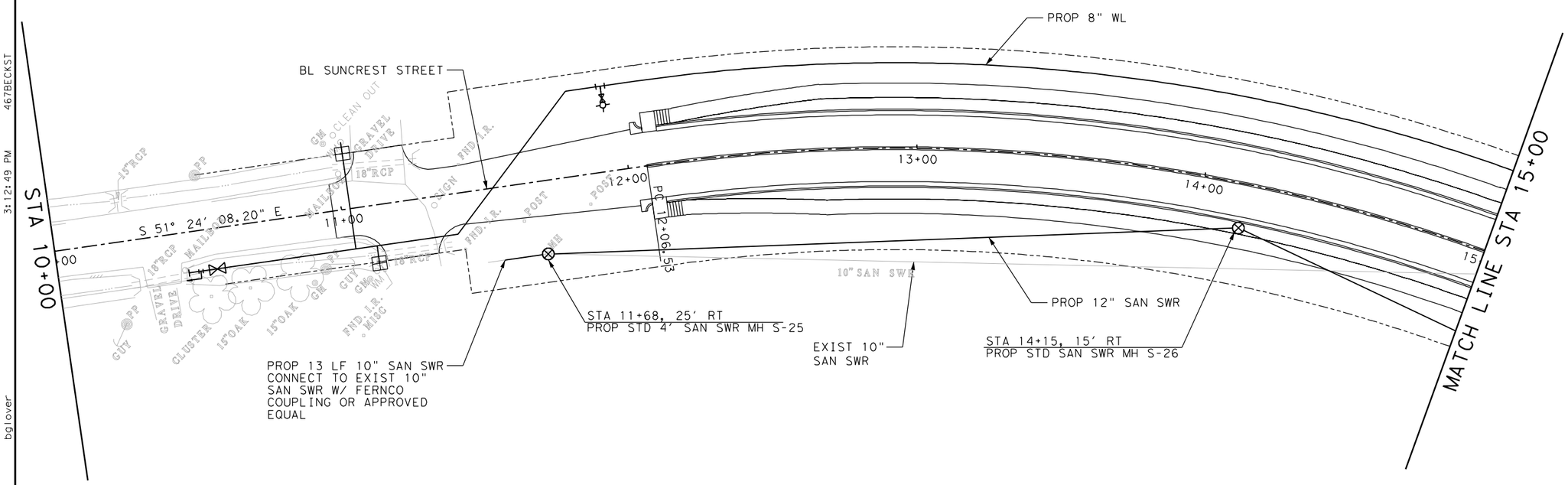

LEGEND

- DITCH FLOW LINE
- FENCE
- UTILITY POLE
- NEW WATER METER
- TELEPHONE CABLE PEDESTAL
- PROPOSED WATER VALVE
- EXISTING WATER VALVE
- PROPOSED SAN SWR MANHOLE
- EXISTING SAN SWR MANHOLE
- PROPOSED FIRE HYDRANT
- WL WATERLINE

0 20 40
SCALE: H, 1" = 40' V, 1' = 4'

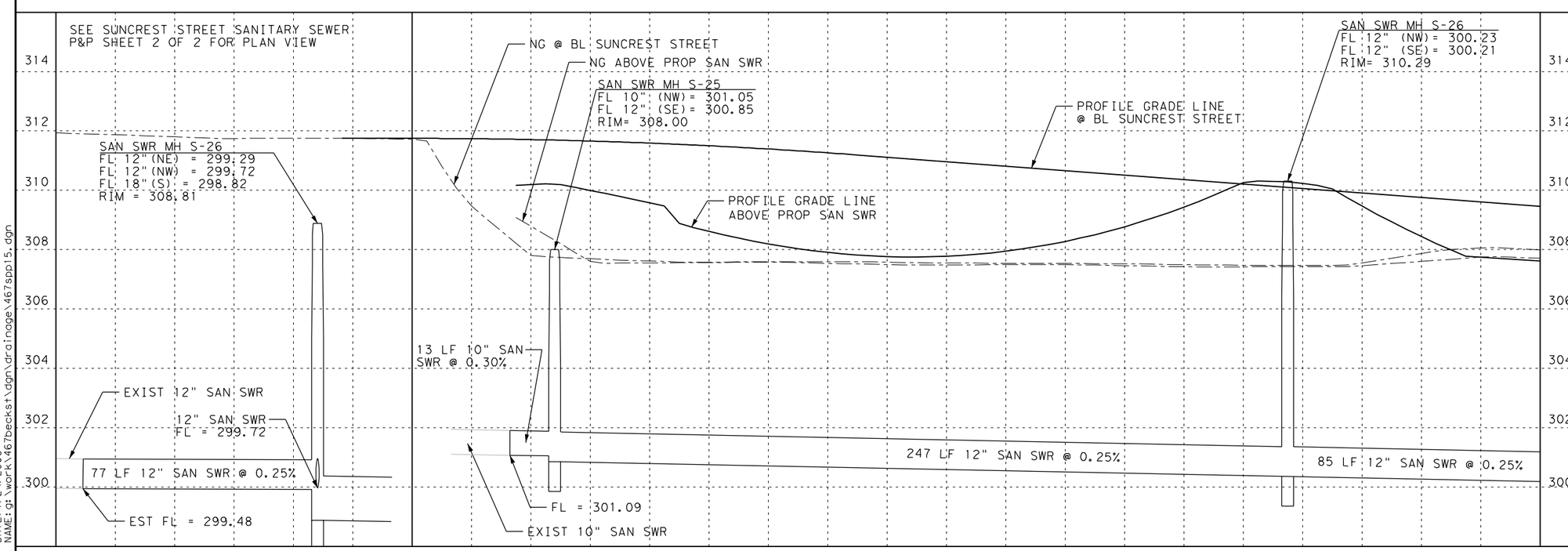

STATE OF TEXAS
MICHAEL A. MARTIN
63282
REGISTERED PROFESSIONAL ENGINEER

THE SEAL APPEARING ON THIS DOCUMENT WAS AUTHORIZED BY MICHAEL A. MARTIN, P.E. 63282 ON 1/23/2006

Epsilon Engineering, Inc.
526 E. UNIVERSITY, 201A / COLLEGE STATION, TEXAS 77840
(979) 764-9119 / eei@epsilonengr.com

CITY OF BRYAN
ENGINEERING
SERVICES

BECK STREET

SUNCREST STREET SANITARY SEWER PLAN & PROFILE STA 10+00 TO STA 15+00

SHEET 1 OF 2

DESIGN:	MAM	DATE:	SHEET NO.
DESIGN CK:	MAM	1/24/2006	318
DRAWN:	BAG		
DRAW CK:	MAM		

PLOT DATE: 1/24/2006
FILE NAME: g:\work\467becks1\dgn\drainage\467spp15.dgn

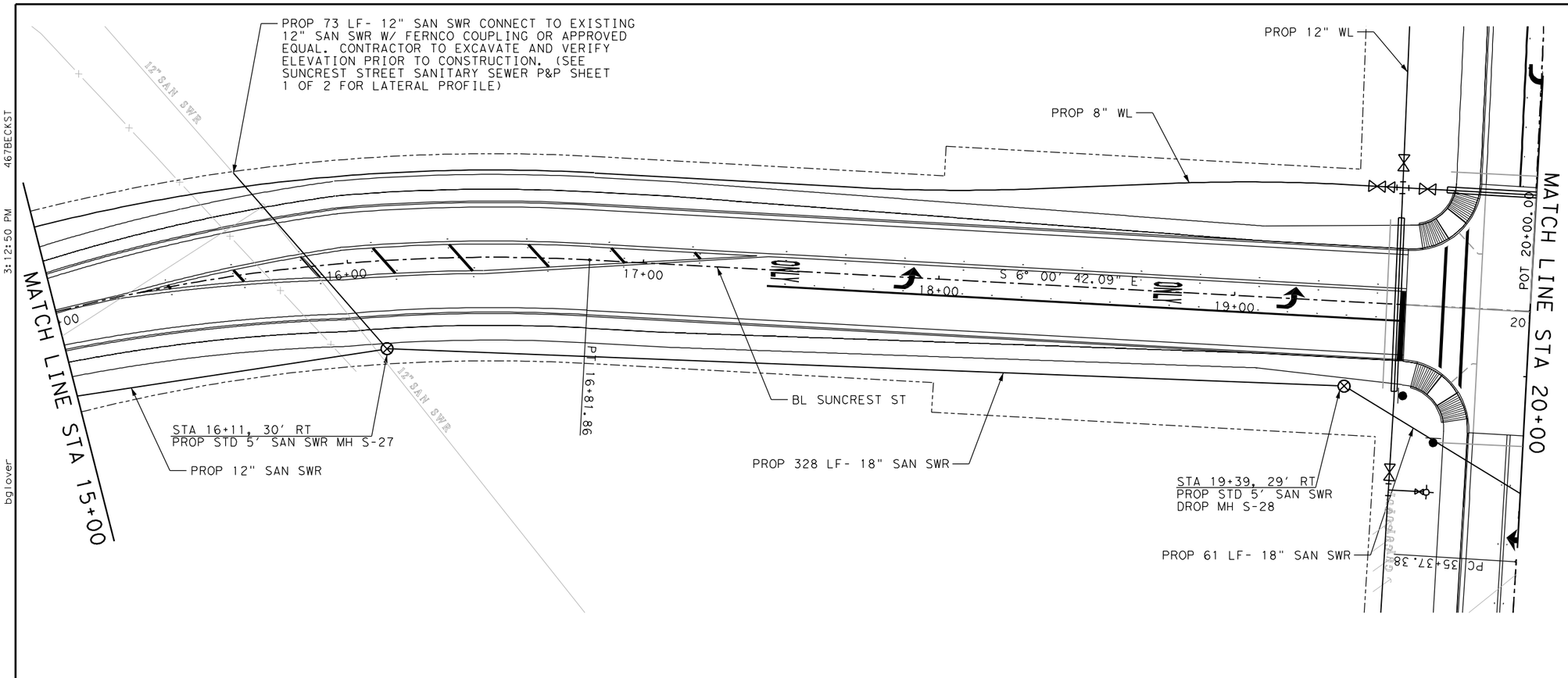

LEGEND

- DITCH FLOW LINE
- FENCE
- UTILITY POLE
- NEW WATER METER
- TELEPHONE CABLE PEDESTAL
- PROPOSED WATER VALVE
- EXISTING WATER VALVE
- PROPOSED SAN SWR MANHOLE
- EXISTING SAN SWR MANHOLE
- PROPOSED FIRE HYDRANT
- WL WATERLINE

0 20 40

SCALE: H, 1" = 40' V, 1' = 4'

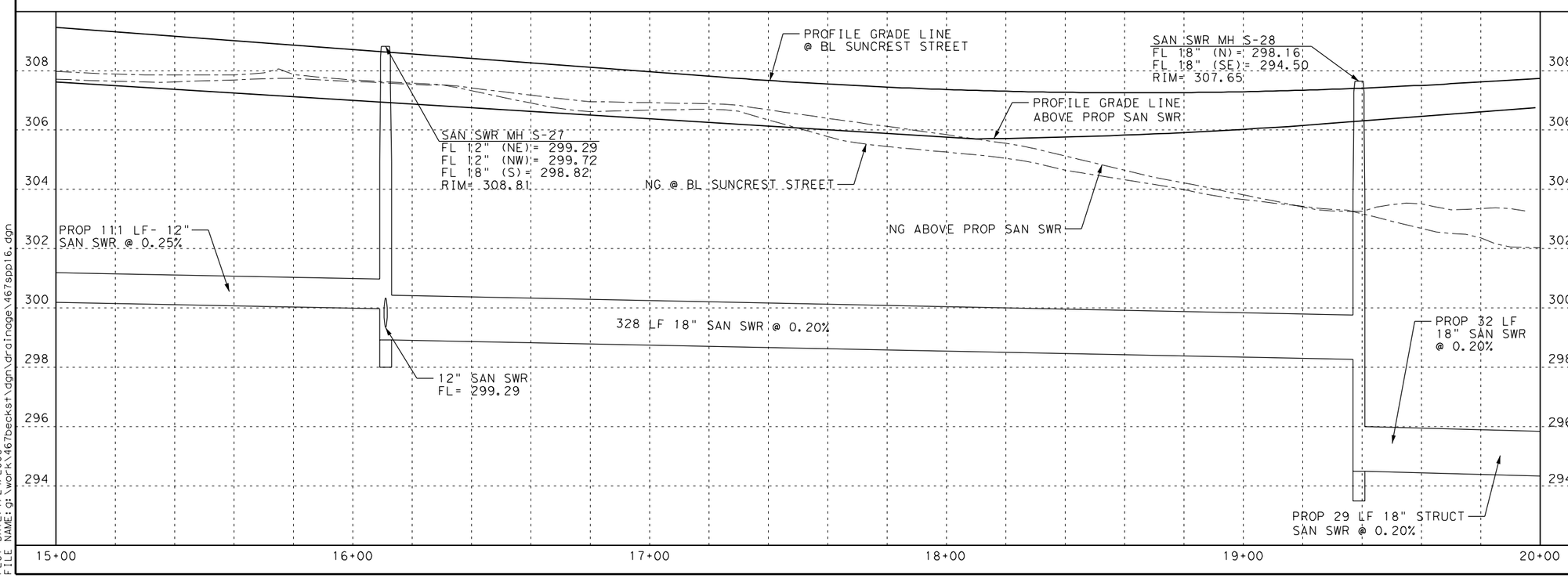

STATE OF TEXAS
MICHAEL A. MARTIN
63282
REGISTERED PROFESSIONAL ENGINEER

THE SEAL APPEARING ON THIS DOCUMENT WAS AUTHORIZED BY MICHAEL A. MARTIN, P.E. 63282 ON 1/23/2006

Epsilon Engineering, Inc.
526 E. UNIVERSITY, 201A / COLLEGE STATION, TEXAS 77840
(979) 764-9119 / eei@epsilonengr.com

CITY OF BRYAN ENGINEERING SERVICES

BECK STREET

SUNCREST STREET SANITARY SEWER PLAN & PROFILE STA 15+00 TO STA 20+00

SHEET 2 OF 2

DESIGN:	MAM	DATE:	SHEET NO.
DESIGN CK:	MAM	1/24/2006	319
DRAWN:	BAG		
DRAW CK:	MAM		

PLOT DATE: 1/24/2006
FILE NAME: g:\work\467becks1\dgn\drainage\467spp16.dgn
467BECKST
3:12:50 PM
bglover

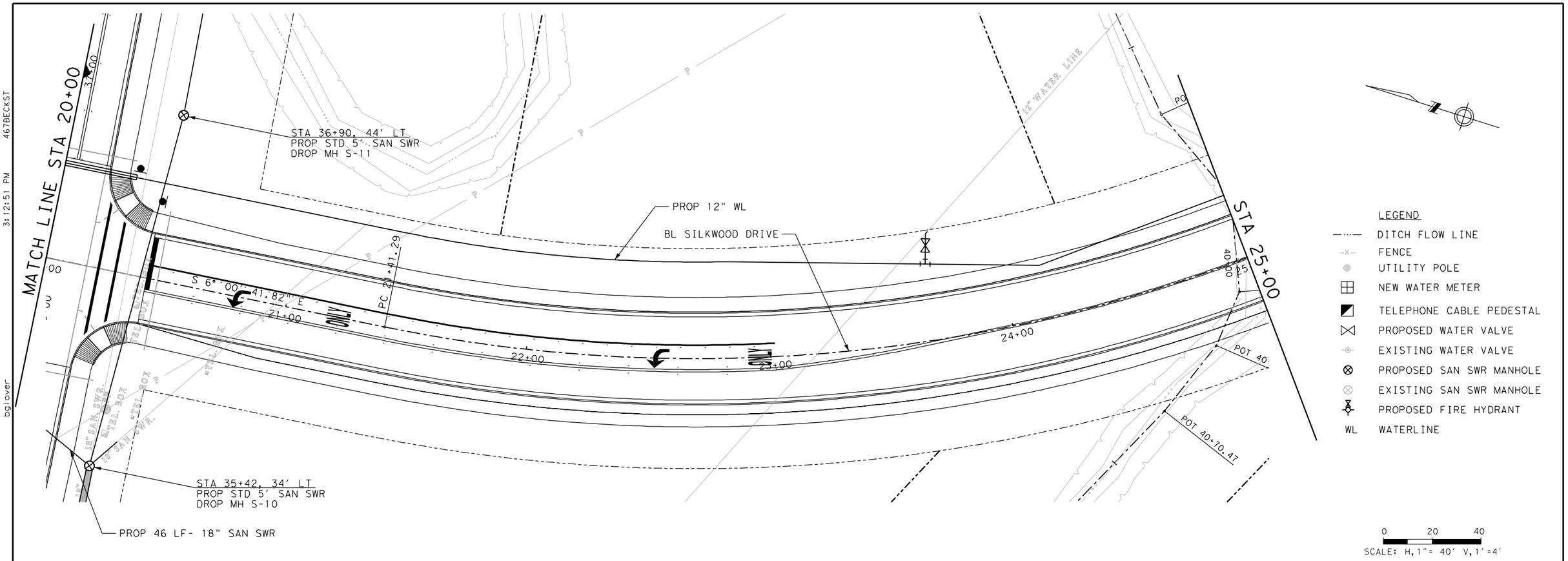

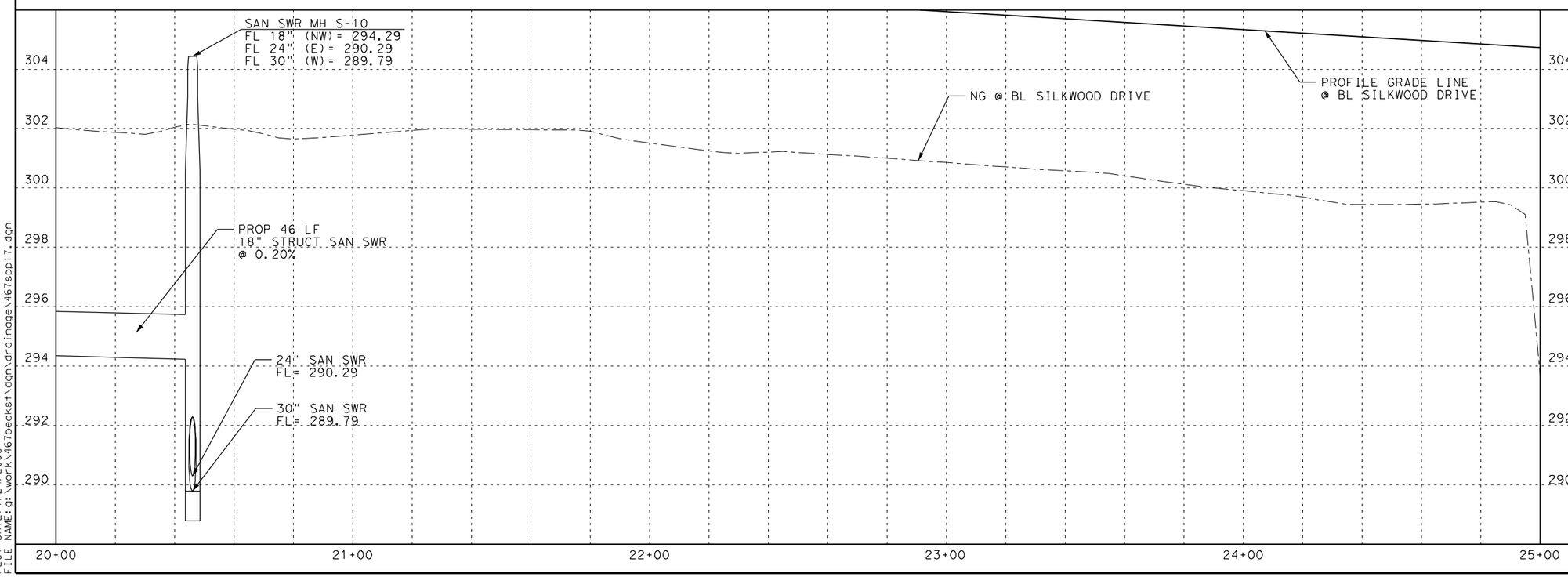

STATE OF TEXAS
MICHAEL A. MARTIN
63282
REGISTERED PROFESSIONAL ENGINEER

THE SEAL APPEARING ON THIS DOCUMENT WAS AUTHORIZED BY MICHAEL A. MARTIN, P.E. 63282 ON 1/23/2006

Epsilon Engineering, Inc.
526 E. UNIVERSITY, 201A / COLLEGE STATION, TEXAS 77840
(979) 764-9119 / eei@epsilonengr.com

CITY OF BRYAN ENGINEERING SERVICES

BECK STREET

SILKWOOD DRIVE SANITARY SEWER PLAN & PROFILE STA 20+00 TO STA 25+00

SHEET 1 OF 1

DESIGN:	MAM	DATE:	SHEET NO.
DESIGN CK:	MAM	1/24/2006	320
DRAWN:	BAG		
DRAW CK:	MAM		

PLOT DATE: 1/24/2006
FILE NAME: g:\work\467beckst\dgn\drainage\467spp17.dgn
bglover
3:12:51 PM
467BECKST

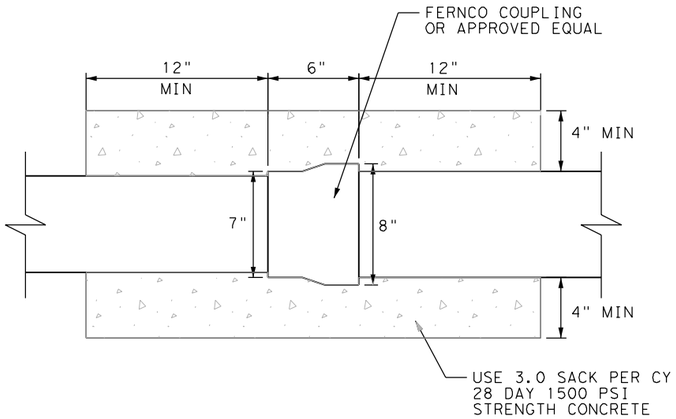

NOTE: CONCRETE ENCASEMENT SHALL NOT BE PAID FOR SEPARATELY, BUT SHALL BE CONSIDERED SUBSIDIARY TO THE PIPE COUPLING.

SANITARY SEWER PIPE COUPLING
ENCASEMENT DETAIL FOR 6" PIPE COUPLINGS

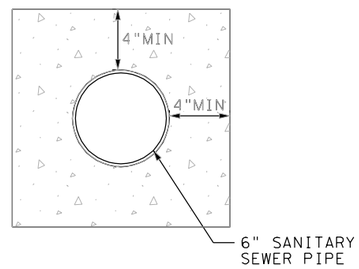

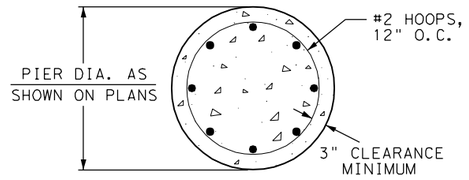

SECTION A- A

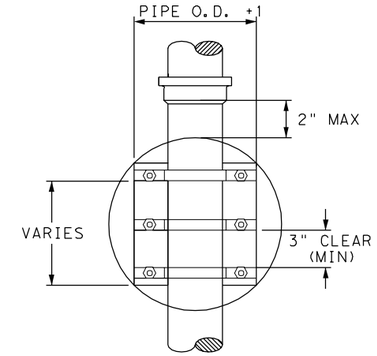

PLAN

NOTE:
1. EACH PIER SHALL BE COMPLETED IN A SINGLE CONTINUOUS POUR.
2. CHAMFER EDGES 3/4".
3. CONTRACTOR SHALL CONSTRUCT CONCRETE PIER TO A MINIMUM DEPTH OF 6' OR TO A DEPTH WHERE A GOOD BEARING SOIL IS ENCOUNTERED.
4. ALL SHAFTS SHALL BE BORED VERTICALLY PLUMB WITHIN 2" TOLERANCE.
5. ALL INFORMATION SHOWN IS CITY MINIMUM.

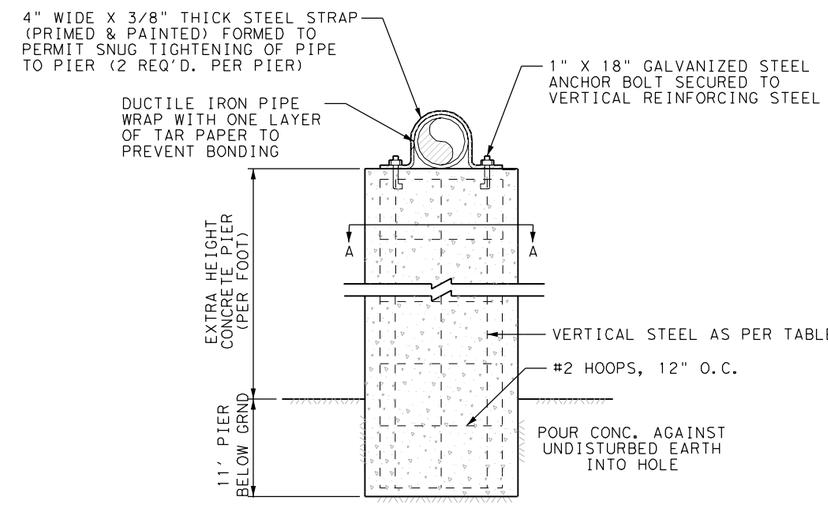

PIER DIAMETER (DIMENSION "A")	VERTICAL STEEL #5 BARS
16"	8
24"	12
26"	14
30"	16
42"	24
48"	32

TYPICAL CONCRETE DRILLED
PIER FOR AERIAL SEWER

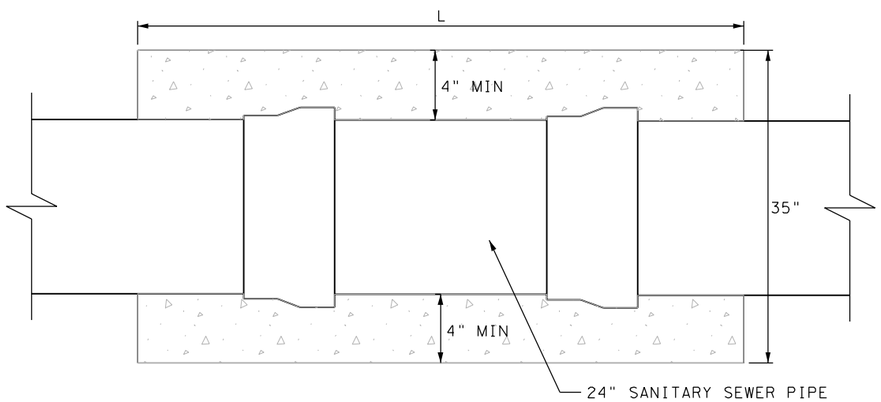

L= LENGTH OF CONCRETE ENCASEMENT AS SHOWN ON PLANS

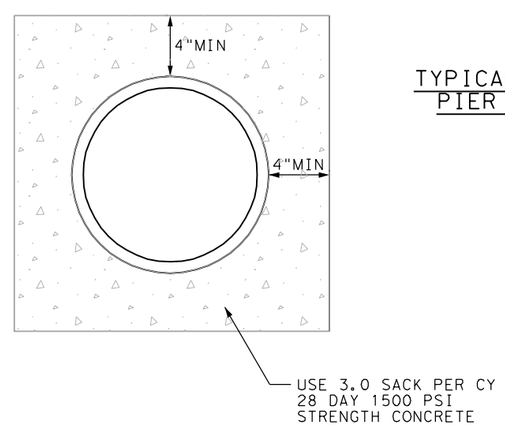

CONCRETE ENCASEMENT OF SANITARY
SEWER AT CREEK CROSSING

STATE OF TEXAS
MICHAEL A. MARTIN
63282
REGISTERED
PROFESSIONAL ENGINEER

THE SEAL APPEARING ON THIS DOCUMENT WAS AUTHORIZED BY MICHAEL A. MARTIN, P.E. 63282 ON 1/23/2006

Epsilon Engineering, Inc.
526 E. UNIVERSITY, 201A / COLLEGE STATION, TEXAS 77840
(979) 764-9119 / eei@epsilonengr.com

CITY OF BRYAN
ENGINEERING
SERVICES

BECK STREET

DRILLED PIER
AND ENCASEMENT
DETAILS

SHEET 1 OF 1

DESIGN:	MAM	DATE:	SHEET NO.
DESIGN CK:	MAM	1/24/2006	321
DRAWN:	BAG		
DRAW CK:	MAM		

PLOT DATE: 1/24/2006
FILE NAME: g:\work\467beckst\dgn\drainage\467sad01.dgn
bglover
3:12:54 PM
467BECKST

NOTES:

1. EACH PIER SHALL BE COMPLETED IN A SINGLE CONTINUOUS POUR.
2. CHAMFER EDGES 3/4".
3. CONTRACTOR SHALL CONSTRUCT CONCRETE PIER TO A MINIMUM DEPTH OF 6' OR TO A DEPTH WHERE A GOOD BEARING SOIL IS ENCOUNTERED.
4. ALL SHAFTS SHALL BE BORED VERTICALLY PLUMB WITHIN 2" TOLERANCE.
5. ALL INFORMATION SHOWN IS CITY MINIMUM. ALL PIERS SHALL BE DESIGNED BY A PROFESSIONAL ENGINEER.

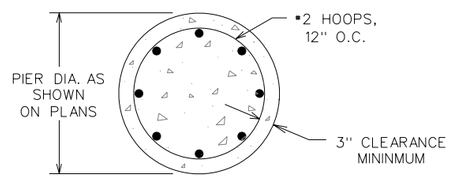

SECTION A-A

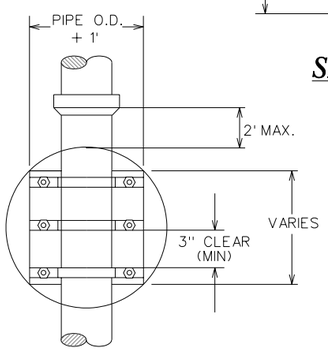

PIER DIAMETER	VERTICAL STEEL #5 BARS
16"	8
24"	12
26"	14
30"	16
42"	24

PLAN

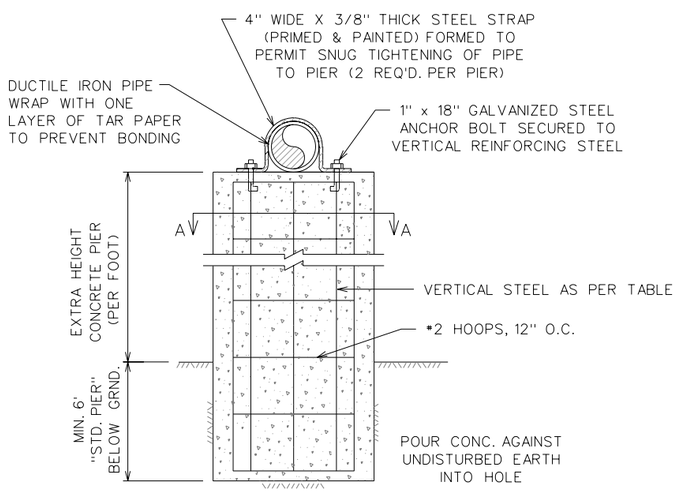

TYPICAL CONCRETE DRILLED PIER FOR AERIAL SEWER

S1-00

NOTE:

MANHOLE BASE SHALL BE PLACED ON FIRM SUBGRADE. ADDITION OF CEMENT STABILIZED SAND OR GRAVEL MAY BE REQUIRED TO STABILIZE FOUNDATION.

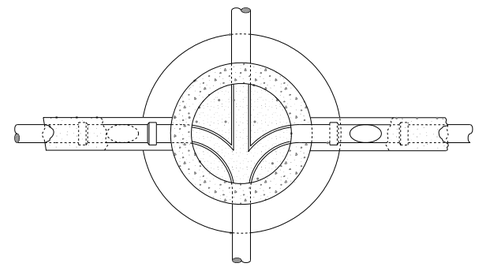

SECTION A - A

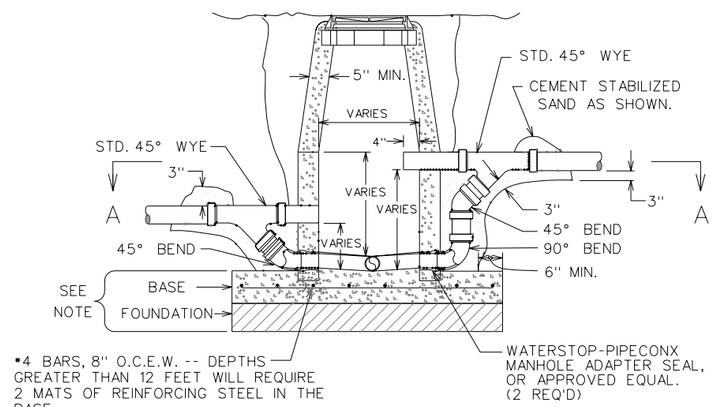

STANDARD DROP MANHOLE

NOTE: CAP CLEAN-OUT AT BLIND FLANGE ON RESTRAINED JOINT FOR FORCE MAINS.

S1-01

NOTES:

1. A MAX. OF 4 AND A MIN. OF 2 THROAT RINGS SHALL BE USED AT EACH MANHOLE IN NEW OR EXISTING RIGHT-OF-WAY.
2. USE ADEKA SEALANT OR APPROVED EQUAL BETWEEN RING/COVER, ADJUSTMENT RINGS AND CHIMNEY OR CORBEL/CONE SECTION.
3. MANHOLE BASE THICKNESS AND FOUNDATION AS FOLLOWS:

MANHOLE DEPTH (FT.)	BASE THICKNESS
0 - 12	8"
12 AND OVER	12"

4. MANHOLE LOCATION AND COMPACTION AS FOLLOWS:

LOCATION	COMPACTION REQUIREMENT
PAVEMENT	98 % STANDARD PROCTOR - ASTM D 698
LANDSCAPE AREA	90 % STANDARD PROCTOR - ASTM D 698

5. NO RINGS ARE REQUIRED OUTSIDE OF STREET RIGHT-OF-WAY
6. IN FLOODPLAINS, THE CONE SHALL EXTEND ABOVE THE BASE FLOOD ELEVATION OR A BOLT DOWN WATER-TIGHT RING AND COVER SHALL BE USED.
7. WARNING SIGN ONLY TO BE PLACED WHERE SEWER CROSSES OPEN FIELDS.

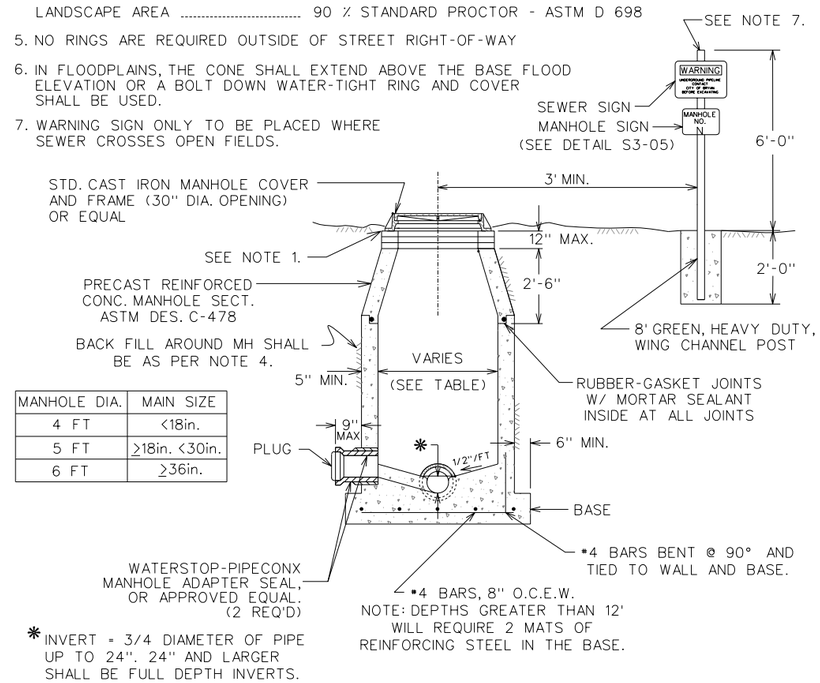

MANHOLE DIA.	MAIN SIZE
4 FT	<18in.
5 FT	≥18in. <30in.
6 FT	≥36in.

* INVERT = 3/4 DIAMETER OF PIPE UP TO 24". 24" AND LARGER SHALL BE FULL DEPTH INVERTS.

STANDARD MANHOLE

S1-02

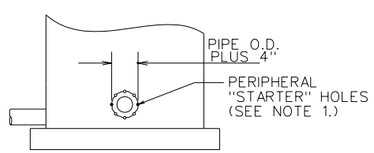

1/A OPENING CREATION DETAIL

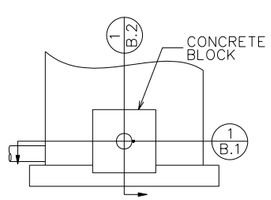

1/B MANHOLE CONNECTION DETAIL

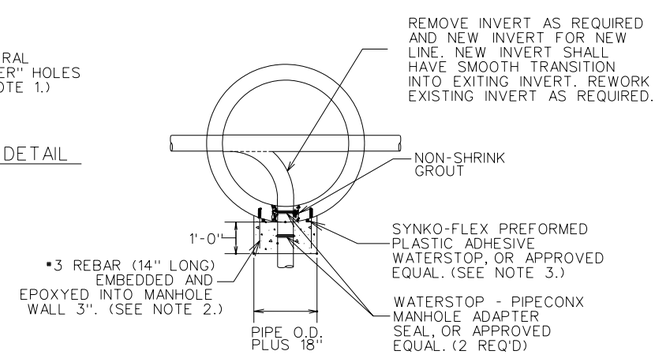

1/B.1 CONNECTION DETAIL SECTION VIEW

NOTES:

1. 1" DIA. "STARTER" HOLES SHALL BE DRILLED THROUGH WALL OF EXISTING MANHOLE SPACED 3" APART CENTER TO CENTER. AFTER "STARTER" HOLES HAVE BEEN INSTALLED AND APPROVED BY A CITY INSPECTOR, THE CONTRACTOR SHALL BEGIN REMOVING THE CONCRETE INSIDE THE PERIPHERAL "STARTER" HOLES. CONCRETE SHALL BE REMOVED WITH PNEUMATIC HAND TOOLS.
2. THE NUMBER OF REBAR DOWELS SHALL VARY WITH SIZE OF OPENING. REBAR SHALL NOT BE SPACED MORE THAN 12" CC.
3. WATERSTOP SHALL BE INSTALLED IN STRICT ACCORDANCE WITH MANUFACTURERS REQUIREMENTS.
4. CONCRETE SHALL BE 3,000 P.S.I.

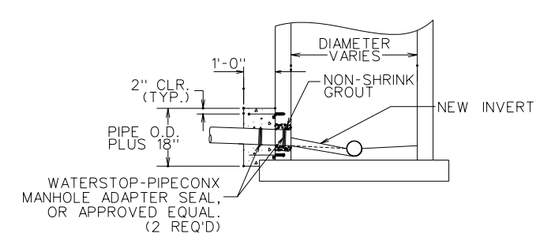

1/B.2 CONNECTION DETAIL SECTION VIEW

STANDARD MANHOLE TIE-IN

S1-03

REVISIONS: Detail S1-00,S1-02-June 2005

BRYAN - COLLEGE STATION STANDARD SEWER DETAILS

CITY OF COLLEGE STATION

CITY OF BRYAN
The Good Life, Texas Style.™

DRAWN BY: RH
DATE: 01-01-05
SCALE: N T S
APPROVED: W.P.K.

FIGURE: S1

SHEET 1 OF 4

NOTE:

1. WHERE DOUBLE WYE SERVICE ELEVATION IS LESS THAN 2'-7" BELOW PROPOSED BACK OF CURB, MIN. SLAB ELEV. MUST BE SET TO ALLOW SANITARY SEWER SERVICE.
2. MARK EACH SERVICE END WITH METAL "T" POST PAINTED GREEN.
3. ALL MATERIAL SHALL BE SCH 40 BELL END PIPE W/ GLUED JOINTS.
4. NO COUPLINGS WILL BE ALLOWED UNDER PAVEMENT AREAS.
5. A CLEAN OUT IS REQUIRED AND WILL BE INSTALLED BY THE CONTRACTOR AT THE ROW FOR EACH SERVICE.

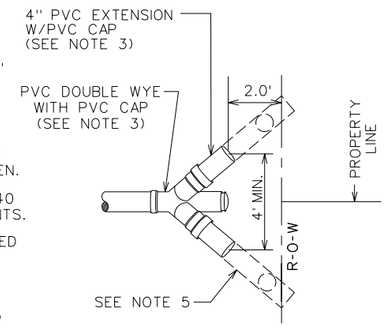

PLAN

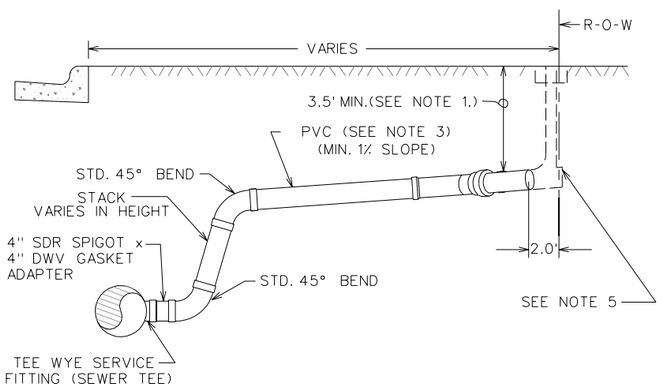

DEEP CONNECTION PROFILE

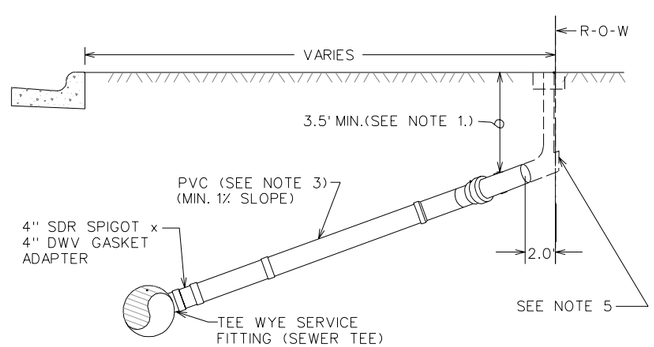

STANDARD CONNECTION PROFILE

SANITARY SEWER SERVICE CONNECTION

S2-00

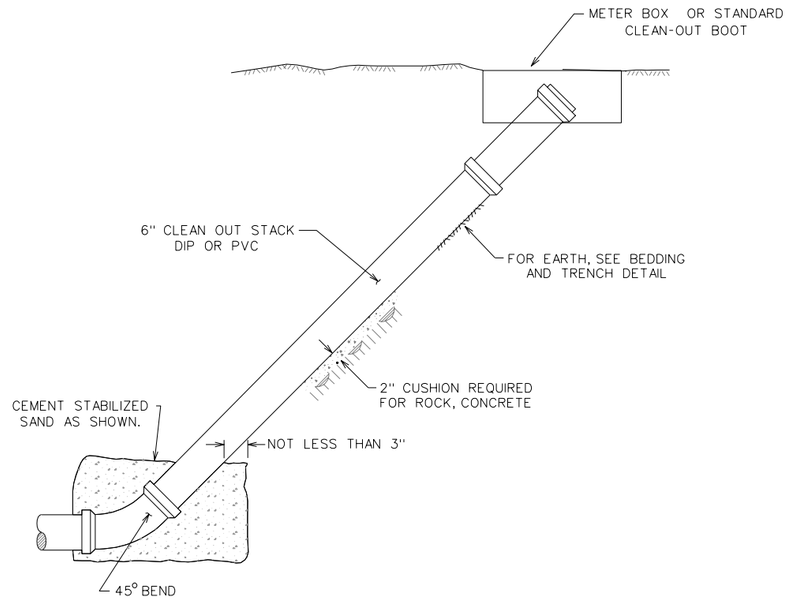

STANDARD CLEAN OUT FOR MAIN LINE

S2-01

GENERAL NOTES:

ALL AREAS WHERE EXISTING VEGETATION AND GRASS COVER HAVE BEEN BARED BY CONSTRUCTION SHALL BE ADEQUATELY BLOCK SODDED OR HYDROMULCHED AND WATERED UNTIL GROWTH IS ESTABLISDHED. IN DEVELOPED AREAS WHERE GRASS IS PRESENT, BLOCK SOD WILL BE REQUIRED. BARED AREAS SHALL BE SEEDED OR SODDED WITHIN 14 CALENDAR DAYS OF LAST DISTURBANCE.

APPROVED EROSION CONTROL MEASURES MUST BE INSTALLED DURING THE ENTIRE TIME THAT EARTH HAS BEEN BARED BY CONSTRUCTION AND SHALL STAY IN PLACE UNTIL ACCEPTABLE VEGETATIVE GROWTH IS ESTABLISHED AFTER CONSTRUCTION IS COMPLETE AND THEN REMOVED BY CONTRACTOR.

ALL EROSION CONTROL MEASURES SHOULD BE CLEANED OF SILT AFTER EVERY RAIN.

ESTABLISHMENT OF VEGETATION MAY BE A WARRANTY ITEM.

Ⓐ SELECT NATIVE MATERIAL
MATERIAL EXCAVATED FROM THE DITCH, (WHICH IS FREE OF ROCKS, LUMPS, CLODS, OR DEBRIS LARGER THAN TWO (2) INCHES IN THE LARGEST DIMENSION), COMPACTED TO A MINIMUM OF 90% OF MAXIMUM DENSITY AS DETERMINED BY ASTM D698 (STANDARD) AT A MOISTURE CONTENT WITHIN OPTIMUM TO +4% OF OPTIMUM UNDER NON-STRUCTURAL AREAS (ie...YARDS, PASTURES, EASEMENTS) AND TO A MINIMUM OF 98% OF MAXIMUM DENSITY AS DETERMINED BY ASTM D698 (STANDARD) AT A MOISTURE CONTENT WITHIN OPTIMUM TO +4% OF OPTIMUM UNDER FUTURE STREET AREAS.

Ⓑ GRANULAR MATERIAL
MATERIAL SHALL BE BANK RUN RIVER SAND WHICH IS FREE OF DETRIMENTAL QUANTITIES OF CLAY, DEBRIS, OR ORGANIC MATERIAL AND WHICH, WHEN TESTED BY STANDARD LABORATORY METHODS, MEET THE FOLLOWING REQUIREMENTS:

MAXIMUM LIQUID LIMIT	45
MAXIMUM PLASTICITY INDEX	15
MAXIMUM PERCENT PASSING NO. 200 SIEVE	35
MINIMUM PERCENT PASSING 3/4" SIEVE	100

THE MATERIAL SHALL BE FREE FLOWING AND WHEN WET, SHALL NOT ADHERE TO FORM A BALL WHEN PRESSED IN THE HAND. COMPACTED CEMENT STABILIZED SAND, 1-1/2 SACK/CY (PUGMILL ONLY). SPADE BY LIFTS INTO PLACE, TO FILL ALL VOIDS AROUND PIPE. MANUALLY CONSOLIDATE AT OPTIMUM MOISTURE.

Ⓒ CEMENT STABILIZED SAND

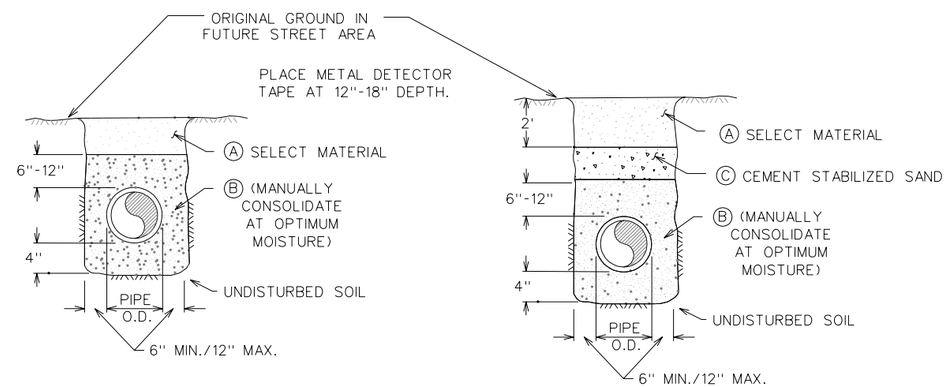

NOTES:

1. FOR BEDDING AND TRENCHING WITHIN EXISTING STREETS SEE DETAILS FOR OPEN CUT STREETS.
2. ALL BEDDING & INSTALLATION OF PVC PIPE SHALL BE IN ACCORDANCE TO ANSI/AWWA STANDARDS FOR PVC PIPE.
3. ALL BEDDING & INSTALLATION OF DUCTILE IRON PIPE SHALL BE IN ACCORDANCE TO ANSI/AWWA C150/A21.50.
4. COMPACTION SHALL BE ATTAINED BY MECHANICAL TAMPING.
5. SEDIMENT RESULTING FROM THE CONTRACTOR'S PERFORMANCE OF THE WORK, EITHER INSIDE OR OUTSIDE THE RIGHT OF WAY, SHALL BE CONTROLLED BY THE CONTRACTOR.
6. ALL TRENCHES SHALL BE BACK FILLED AND TEMPORARY PAVING OR PLANKING PLACED AT THE END OF EACH WORKING DAY.
7. TWENTY-FOUR (24) HOUR NOTIFICATION TO ENGINEERING IS REQUIRED PRIOR TO COMMENCEMENT OF WORK.

BEDDING AND TRENCH FOR DI PIPE & PVC PIPE

S2-02

REVISIONS:
Detail S2-00 & S2-02 - June 2005

BRYAN - COLLEGE STATION
STANDARD SEWER DETAILS

CITY OF COLLEGE STATION

CITY OF BRYAN
The Good Life, Texas Style.™

DRAWN BY: C.L.M.
DATE: 01-01-05
SCALE: N T S
APPROVED: W.P.K.
FIGURE:
S2
SHEET 2 OF 4

NOTE:

1. WHERE DOUBLE WYE SERVICE ELEVATION IS LESS THAN 2'-7" BELOW PROPOSED BACK OF CURB, MIN. SLAB ELEV. MUST BE SET TO ALLOW SANITARY SEWER SERVICE.
2. MARK EACH SERVICE END WITH METAL "T" POST PAINTED GREEN.
3. ALL SERVICE CONNECTIONS WITHIN THE R-O-W SHALL BE SCH 40 BELL END PIPE W/ GLUED JOINTS.
4. ALL SERVICE CONNECTIONS & EXTENSIONS ARE TO BE INSTALLED WITH THE MAIN LINE CONSTRUCTION.
5. A CLEAN OUT IS REQUIRED AND WILL BE INSTALLED BY THE PLUMBER AT THE ROW FOR EACH SERVICE.

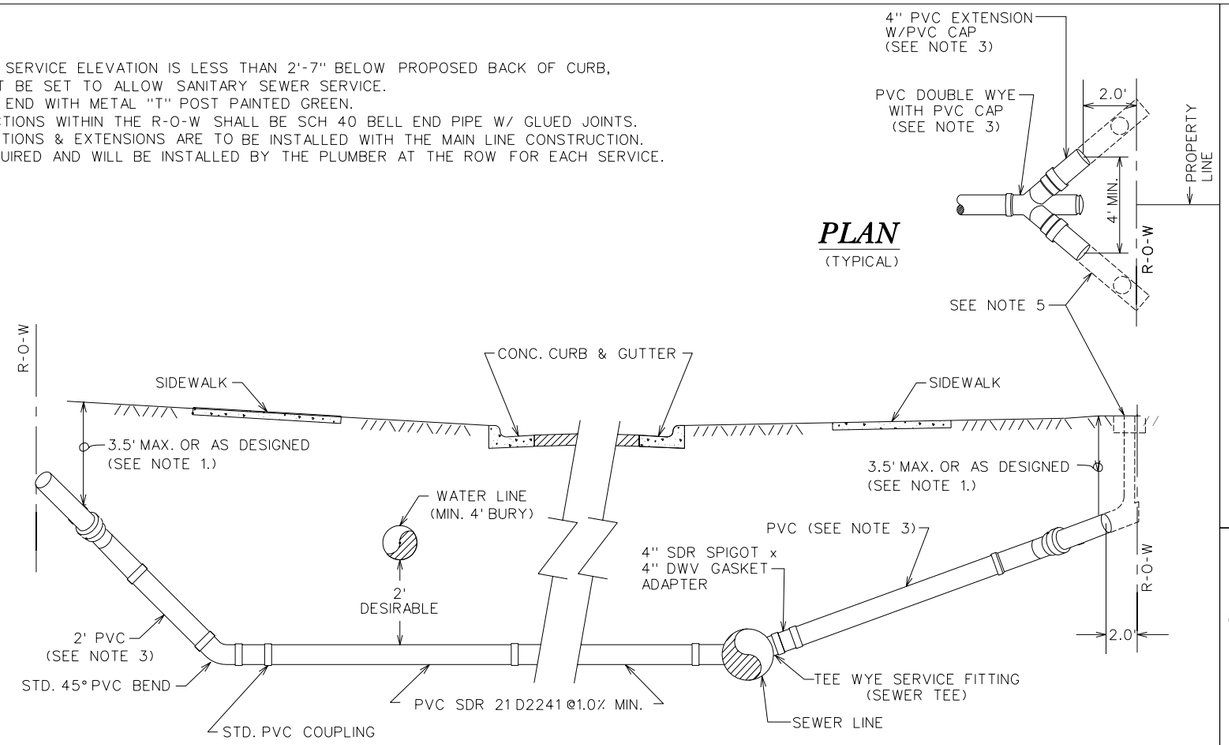

PROFILE

SEWER SERVICE LINE CROSSING

S3-00

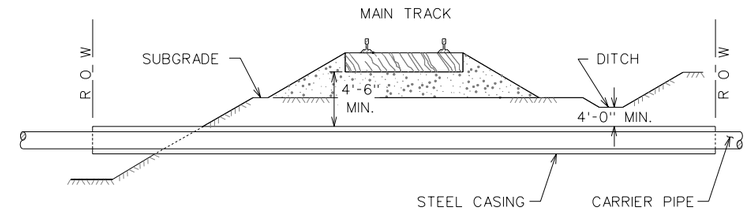

MACHINE BORING (TUNNELING IN EMBANKMENT)

MACHINE BORING (TUNNELING IN CUT)

NOTE:

1. FOR MORE INFORMATION ON WATER AND SEWER LINE CROSSING SEE CITY STANDARD SPECIFICATION FOR WATER AND SEWER LINE CONSTRUCTION.
2. STEEL CASING SHALL BE AS SPECIFIED IN THE TECHNICAL SPECIFICATIONS.
3. DRY BORING IS REQUIRED.

TYPICAL RAILROAD CROSSING

S3-01

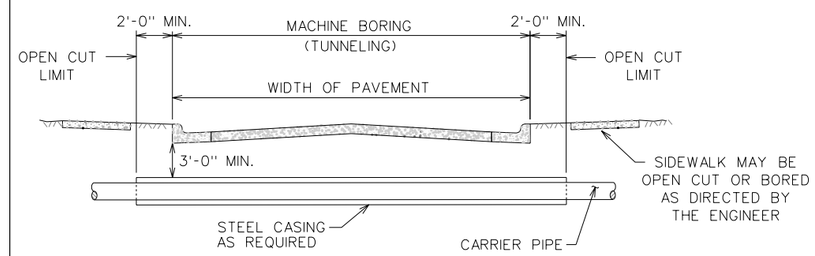

NOTE:

1. FOR MORE INFORMATION ON WATER AND SEWER LINE CROSSING SEE CITY STANDARD SPECIFICATION FOR WATER AND SEWER LINE CONSTRUCTION.
2. STEEL CASING SHALL BE AS SPECIFIED IN THE TECHNICAL SPECIFICATIONS.
3. DRY BORING PREFERRED, WET BORING ALLOWED ONLY WHEN APPROVED BY THE CITY ENGINEER.

TYPICAL CITY STREET CROSSING

S3-02

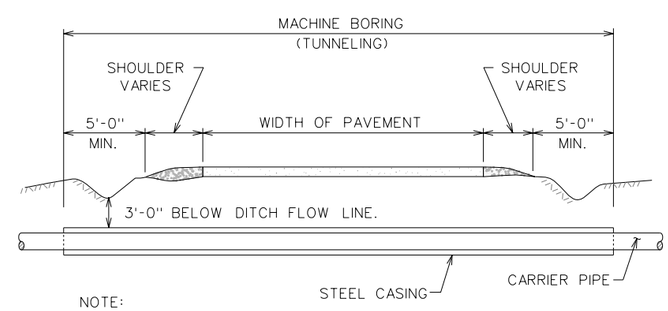

NOTE:

1. FOR MORE INFORMATION ON WATER AND SEWER LINE CROSSING SEE CITY STANDARD SPECIFICATION FOR WATER AND SEWER LINE CONSTRUCTION.
2. STEEL CASING SHALL BE AS SPECIFIED IN THE TECHNICAL SPECIFICATIONS.
3. DRY BORING IS REQUIRED.

TYPICAL STATE HIGHWAY OR MAIN THOROUGHFARE CROSSING

S3-03

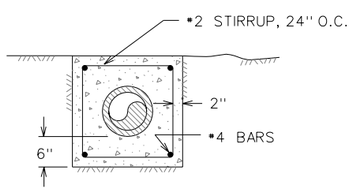

CONCRETE ENCASEMENT

S3-04

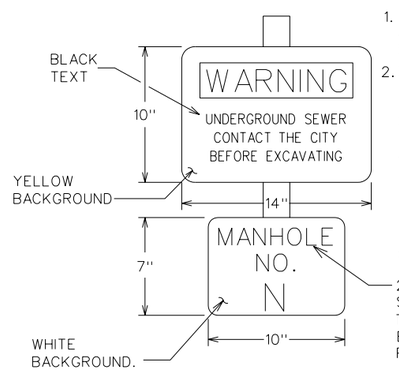

NOTES:

1. FURNISH AS SHOWN ON PLANS AND/OR AT EACH MANHOLE WHERE SEWER LINE CROSSES OPEN FIELDS
2. SIGNS TO BE CONSTRUCTED FROM 20 GA. STEEL BAKED ON ENAMEL FINISH. FURNISH ONE ONE SIGN AND ONE POST FOR EACH MANHOLE INSTALLED ACROSS OPEN FIELD AND AT OTHER LOCATIONS AS SHOWN ON PLANS. FURNISH SAME NUMBER OF REPLACEMENT SIGNS AS FOR EACH INSTALLED (OMITTING MANHOLE NUMBER ON MANHOLE SIGN) (NOT A SEPARATE PAY ITEM)

2" BLACK PRESSURE SENSITIVE NUMBERS TO BE ADDED AFTER BASIC SIGN HAS BEEN PAINTED.

SEWER WARNING AND MANHOLE IDENTIFICATION SIGN

S3-05

REVISIONS:
Detail S3-00,S3-04-June 2005
Detail S3-05-June 2005

BRYAN - COLLEGE STATION
STANDARD SEWER DETAILS

CITY OF COLLEGE STATION

CITY OF BRYAN
The Good Life, Texas Style.™

DRAWN BY: RT
DATE: 01-01-05
SCALE: N T S
APPROVED: W.P.K.

FIGURE:
S3
SHEET 3 OF 4

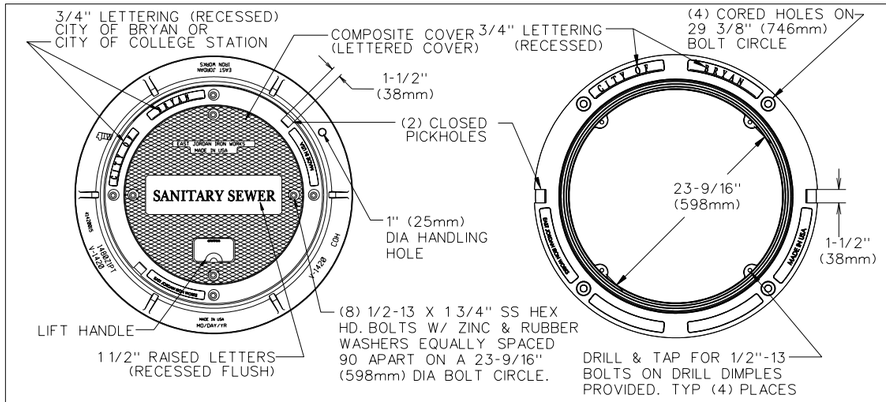

PLAN VIEW

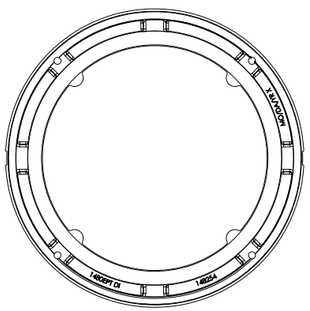

BOTTOM VIEW

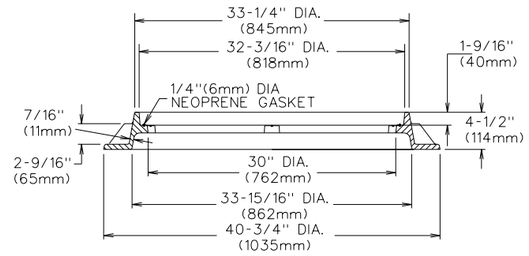

FRAME SECTION

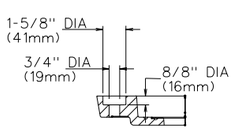

BOLT HOLE DETAIL

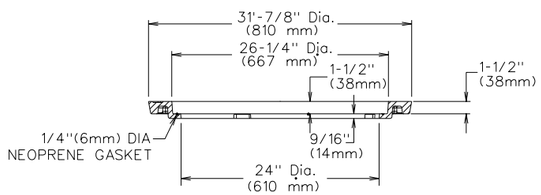

INNER COVER SECTION

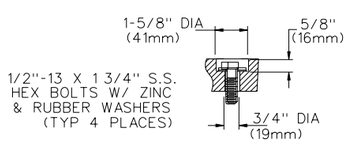

MOLDED C'BORED BOLT HOLE
(FRAME IS DRILLED AND TAPPED)

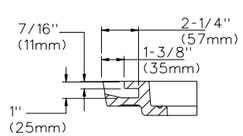

INNER COVER
PICKHOLE DETAIL

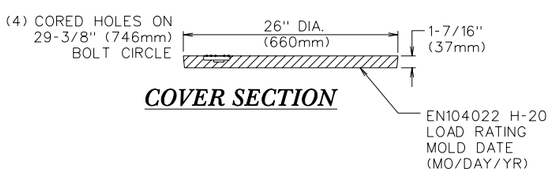

COVER SECTION

STANDARD MANHOLE RING AND COVER

WHEN MANHOLE IS > 3' ABOVE GROUND

S4-01

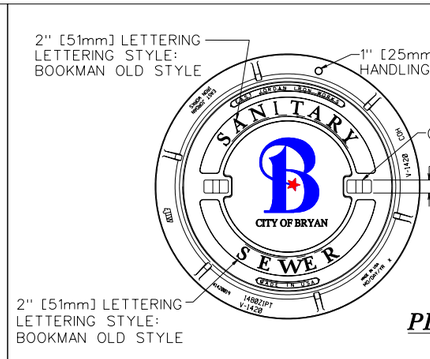

PLAN VIEW

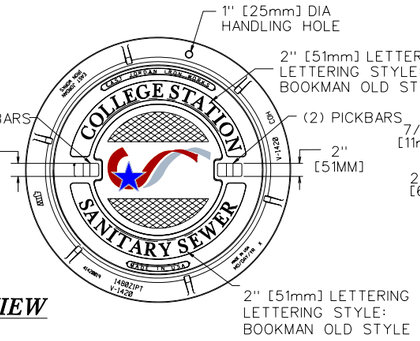

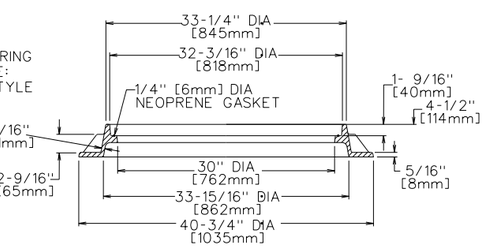

FRAME SECTION

√ MACHINED SURFACE

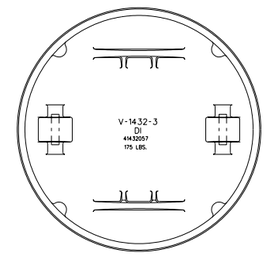

BOTTOM VIEW
OF COVER

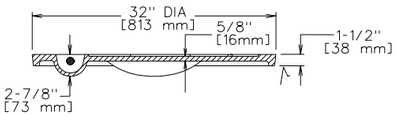

COVER SECTION

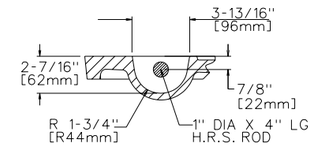

PICKBAR DETAIL

STANDARD MANHOLE RING AND COVER

S4-02

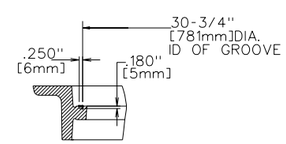

MACHINE GROOVE
DETAIL

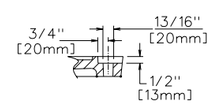

BOLT HOLE SECTION

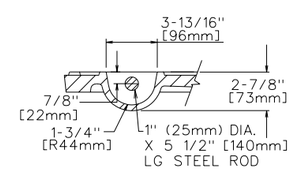

PICKBAR DETAIL

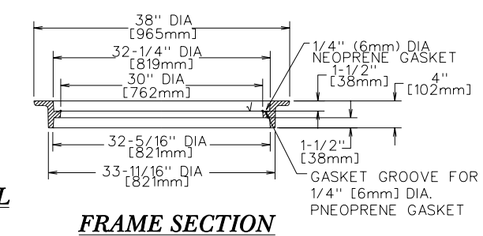

FRAME SECTION

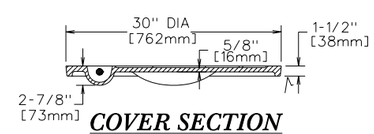

COVER SECTION

√ MACHINED SURFACE

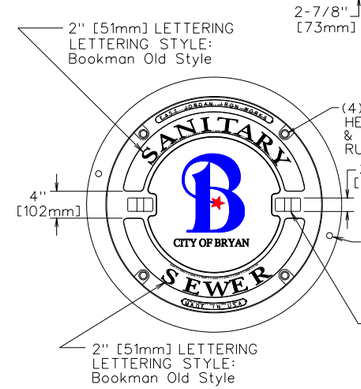

PLAN VIEW

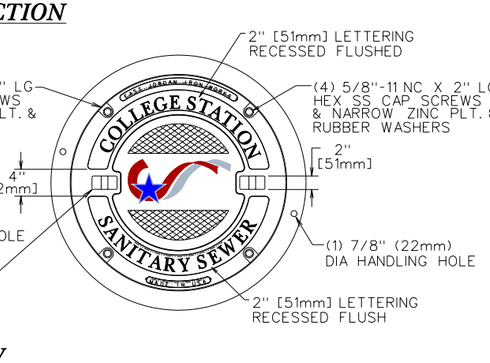

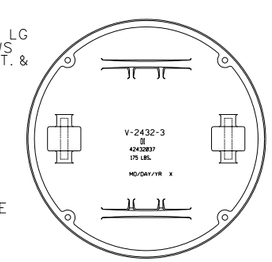

BOTTOM VIEW

WATER TIGHT MANHOLE RING AND COVER

S4-03

REVISIONS:
Detail S4-01,S4-02,S4-03 - June 2005

BRYAN - COLLEGE STATION
STANDARD SEWER DETAILS

CITY OF COLLEGE STATION

CITY OF BRYAN
The Good Life, Texas Style.™

DRAWN BY: RKI
DATE: 01-01-05
SCALE: N T S
APPROVED: W.P.K.

FIGURE:
S4
SHEET 4 OF 4

SITE DESCRIPTION

PROJECT LIMITS:

BECK STREET
From FM 2818 to Anson Street
(Project Length = 8382.84 ft = 1.587 mi)
LAT = 30°39'30" N LONG = 96°23'20" W

PROJECT DESCRIPTION:

For the construction of the widening and extension of a minor arterial facility and extension of two collector facilities consisting of grading, drainage, structures, pavement, curbing, sidewalks, water lines, sanitary sewer lines, and traffic signals.

SEQUENCE OF MAJOR SOIL DISTURBING ACTIVITIES:

1. Windrow the existing topsoil in accordance with the typical section detail for the SW3P items.
2. Excavate area for culverts, sanitary sewers, water lines, and storm drain systems.
3. Pulverize and shape existing roadway materials to desired typical section.
4. Lime treat, shape, and cure existing roadway materials.
5. Place, manipulate and compact embankment.
6. Place, process, cure, and finish flexible base.

TOTAL PROJECT AREA: 28.43 ACRES

TOTAL AREA TO BE DISTURBED: 23.75 ACRES - 83.5%

EXISTING CONDITION OF SOIL & VEGETATIVE COVER AND % OF EXISTING VEGETATIVE COVER:

Nearly level to moderately sloping, moderately deep and very deep, loamy soils that are somewhat poorly drained or moderately well drained. Vegetation is in good condition with coverage estimated at 95% of unpaved right of way.

NAME OF RECEIVING WATERS:

The existing drainage is handled with storm sewer systems and v-bottom ditches that flow into Thompson Creek ID:1242D.

ANTICIPATED EFFECT OF STORM WATER ON THREATENED AND ENDANGERED SPECIES AND WILDLIFE HABITAT:

None

EROSION AND SEDIMENT CONTROLS AND TCEQ 401 CERTIFICATION

I. SOIL STABILIZATION PRACTICES AND EROSION CONTROL:

X TEMPORARY SEEDING
X PERMANENT PLANTING, SODDING, OR SEEDING
___ MULCHING
___ SOIL RETENTION BLANKET
___ BUFFER ZONES
X PRESERVATION OF NATURAL RESOURCES
___ SUBSURFACE DRAINS

OTHER:
Disturbed areas on which construction activity has ceased (temporarily or permanently) shall be stabilized within 14 days unless activities are scheduled to resume and do within 21 days. Permanent riprap shall be placed as early as possible in any phase of construction.

II. POST CONSTRUCTION: (IF COE PERMIT IS ISSUED)

X RETENTION/IRRIGATION
___ EXTENDED DETENTION BASINS
___ VEGETATION FILTER STRIPS
___ CONSTRUCTION WETLANDS
___ WET BASINS
X VEGETATION LINED DRAINAGE DITCHES
___ GRASSY SWALES
___ SAND FILTER SYSTEMS

OTHER:

III. STRUCTURAL PRACTICES AND SEDIMENTATION CONTROL: (T/P)*

T SEDIMENT CONTROL FENCES
T HAY BALES
___ ROCK BERMS
P STORM SEWERS
P CURBS AND GUTTERS
___ VELOCITY CONTROL DEVICES
___ PIPE SLOPE DRAINS
___ PAVED FLUMES
T SAND BAG BERM
___ GRAVEL BAG BERM
___ BRUSH BERMS
___ TRIANGULAR FILTER DIKE
___ STONE OUTLET SEDIMENT TRAPS
T ROCK BEDDING AT CONSTRUCTION EXIT
___ TIMBER MATTING AT CONSTRUCTION EXIT
___ DIVERSION, INTERCEPTOR, OR PERIMETER DIKES
___ DIVERSION, INTERCEPTOR, OR PERIMETER SWALES
___ DIVERSION DIKE AND SWALE COMBINATIONS
T ROCK FILTER DAMS
P CHANNEL LINERS
___ SEDIMENT TRAPS
___ SEDIMENT BASINS
T STORM INLET SEDIMENT TRAP
___ STONE OUTLET STRUCTURES

* T means Temporary - P means Permanent

OTHER:

NARRATIVE - SEQUENCE OF CONSTRUCTION (STORM WATER MANAGEMENT) ACTIVITIES:

All work to be performed by the Contractor.
The order of activities will be as follows:

1. Implement sediment controls before disturbing existing vegetation.
2. For proposed roadway and utility construction, blade existing sod and windrow outside of work area, creating a berm.
3. Return windrowed sod to front slopes and stabilize after placement of HMAC.
4. For storm drain construction, place temporary inlet protection as soil disturbance and inlet construction necessitate.
5. When all construction activity is complete and the site is stabilized and approved by the Engineer, remove all temporary structural controls and reseed any areas disturbed by their removal.

STORM WATER MANAGEMENT:

Storm water drainage will be provided by storm sewer systems and v-bottom ditches. These systems will carry drainage within the R.O.W. to locations along the roadway where cross drainage structures are located.

OTHER EROSION AND SEDIMENT CONTROLS:

MAINTENANCE:
All erosion and sediment controls will be maintained in good working order. If a repair is necessary, it will be done at the earliest date possible, but no later than 7 calendar days after the surrounding exposed ground has dried sufficiently to prevent further damage from heavy equipment. The areas adjacent to creeks and drainageways shall have priority. Sediment must be removed from sediment traps or sedimentation ponds when design capacity has been reduced by 50%.

INSPECTION:
An inspection will be performed by a COB inspector at a frequency chosen in accordance with the TCEQ construction general permit.

DESCRIPTION OF CONSTRUCTION MATERIALS TO BE STORED ON-SITE AND CONTROLS TO PREVENT THESE FROM ENTERING STORM WATER:
The Contractor shall store all construction materials (wood, flex base, aggregate, etc.) in locations where they will not enter storm water runoff. Structural controls may be required for flex base, aggregate and earth stockpiles.

WASTE MATERIALS:
No construction waste material shall be buried or disposed of on site. All material shall be stored and disposed of in accordance with local, state, and federal regulations.

HAZARDOUS WASTE (INCLUDING SPILL REPORTING):
At a minimum, any products in the following categories are considered to be hazardous: paints, acids for cleaning masonry surfaces, cleaning solvents, asphalt products, chemical additives for soil stabilization or concrete curing compounds and additives. In the event of a spill which may be hazardous, the Spill Coordinator should be contacted immediately.

SANITARY WASTE:
All sanitary waste will be collected from the portable units as necessary or as required by local regulation by a licensed sanitary waste management director.

OFFSITE VEHICLE TRACKING:

X HAUL ROADS DAMPENED FOR DUST CONTROL
X LOADED HAUL TRUCKS TO BE COVERED WITH TARPAULIN
X EXCESS DIRT ON ROAD REMOVED DAILY
X STABILIZED CONSTRUCTION ENTRANCE

REMARKS:

Texas Department of Transportation
Area Office

TxDOT STORM WATER POLLUTION PREVENTION PLAN (SW3P)

© TxDOT

DNV -	CKV -	DWV -	CKV -

REVISIONS	STATE DISTRICT	FEDERAL REGION	PROJECT	SHEET
03-22-02 09-11-02 06-15-03 08-01-03 09-22-04 02-18-05	BRYAN	6		326

COUNTY	CONTROL	SECTION	JOB	HIGHWAY
BRAZOS				

LEVELS DISPLAYED
1 2 5 6 7 8 9 10 11 12 13 14 15 16
17 18 19 20 21 22 23 24 25 26 27 28 29 30 31 32
33 34 35 36 37 38 39 40 41 42 43 44 45 46 47 48
49 50 51 52 53 54 55 56 57 58 59 60 61 62 63
ACC:
1/24/2006
3:12:55 PM
g:\work\46Tbeckst\dgn\sw3p\467sw3p01.dgn

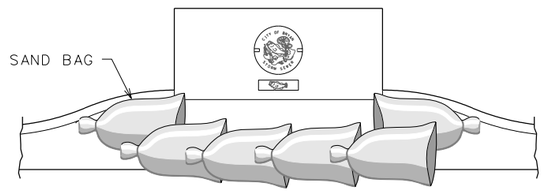

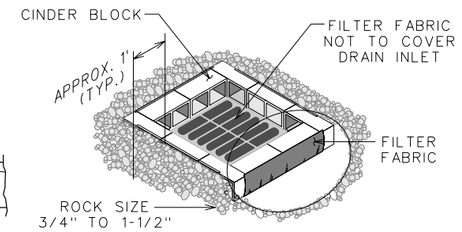

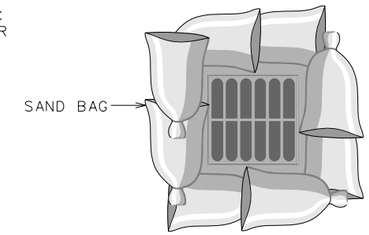

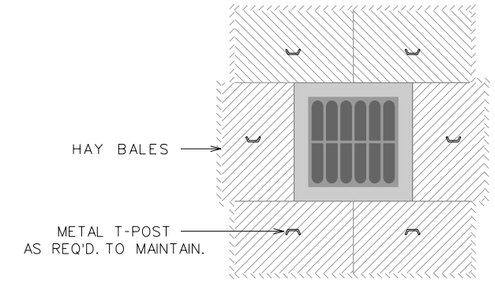

NOTE:

TEMPORARY DEVICES AROUND STORM DRAINS ARE USED TO DETAIN AND/OR FILTER SEDIMENT-LADEN RUNOFF. THE PROTECTION ALLOWS SEDIMENT TO SETTLE PRIOR TO DISCHARGE INTO A STORM DRAIN INLET OR CATCH BASIN.
SAND BAGS SHALL BE UV RESISTANT AND MUST NOT DEGRADE DUE TO ATMOSPHERIC CONDITIONS.
SAND BAGS SHALL BE REPLACED UPON FIRST SIGN OF DETERIORATION.

STORM DRAIN INLET PROTECTION

SWPP1-00

NOTE:
HAY BALES ARE USED TO DETAIN AND/OR FILTER SEDIMENT-LADEN RUNOFF. THE PROTECTION ALLOWS SEDIMENT TO SETTLE PRIOR TO DISCHARGE INTO A STORM DRAIN INLET OR CATCH BASIN.

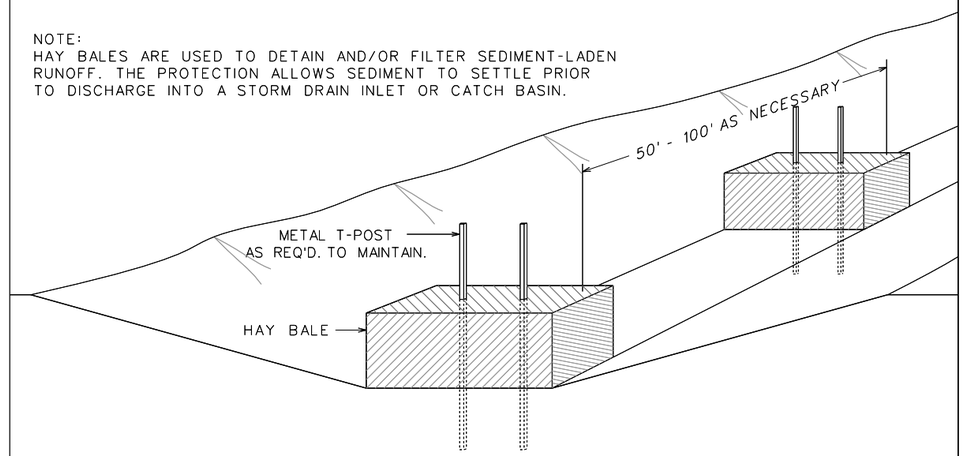

EROSION CONTROL ALONG DITCH

SWPP1-01

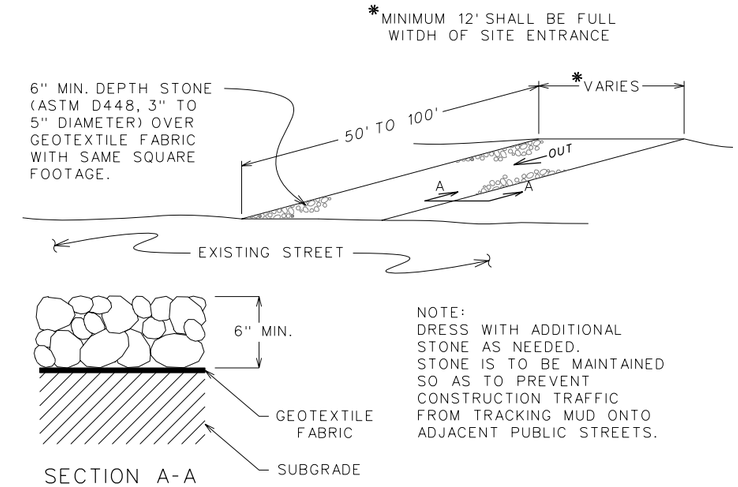

NOTE:
DRESS WITH ADDITIONAL STONE AS NEEDED.
STONE IS TO BE MAINTAINED SO AS TO PREVENT CONSTRUCTION TRAFFIC FROM TRACKING MUD ONTO ADJACENT PUBLIC STREETS.

CONSTRUCTION EXIT SILT CONTROL

SWPP1-02

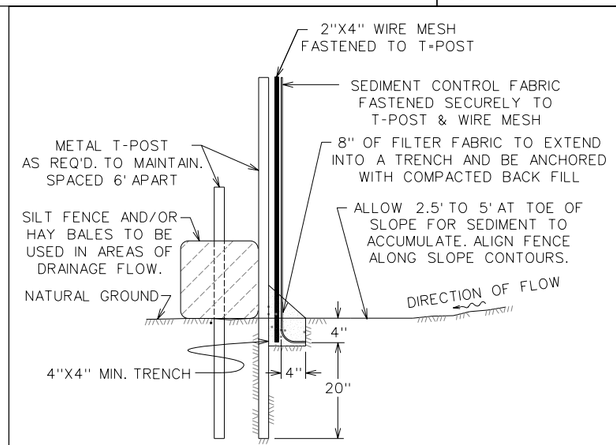

SILT FENCE ASSEMBLY

SWPP1-03

GENERAL NOTES:

ALL AREAS WHERE EXISTING VEGETATION AND GRASS COVER HAVE BEEN BARED BY CONSTRUCTION SHALL BE ADEQUATELY BLOCK SODDED OR HYDROMULCHED AND WATERED UNTIL GROWTH IS ESTABLISHED. IN DEVELOPED AREAS WHERE GRASS IS PRESENT, BLOCK SOD WILL BE REQUIRED. BARED AREAS SHALL BE SEEDED OR SODDED WITHIN 14 CALENDAR DAYS OF LAST DISTURBANCE.

APPROVED EROSION CONTROL MEASURES MUST BE INSTALLED DURING THE ENTIRE TIME THAT EARTH HAS BEEN BARED BY CONSTRUCTION AND SHALL STAY IN PLACE UNTIL ACCEPTABLE VEGETATIVE GROWTH IS ESTABLISHED AFTER CONSTRUCTION IS COMPLETE AND THEN REMOVED BY CONTRACTOR.

ALL EROSION CONTROL MEASURES SHOULD BE CLEANED OF SILT AFTER EVERY RAIN.

REVISIONS:

CITY OF BRYAN STANDARD STORM WATER POLLUTION PREVENTION DETAILS

THE CITY OF BRYAN TEXAS

327

DRAWN BY: [illegible]
DATE: 04-07-03
SCALE: N T S
APPROVED: W. P. K.
FIGURE:
SWPP1
SHEET 1 OF 1

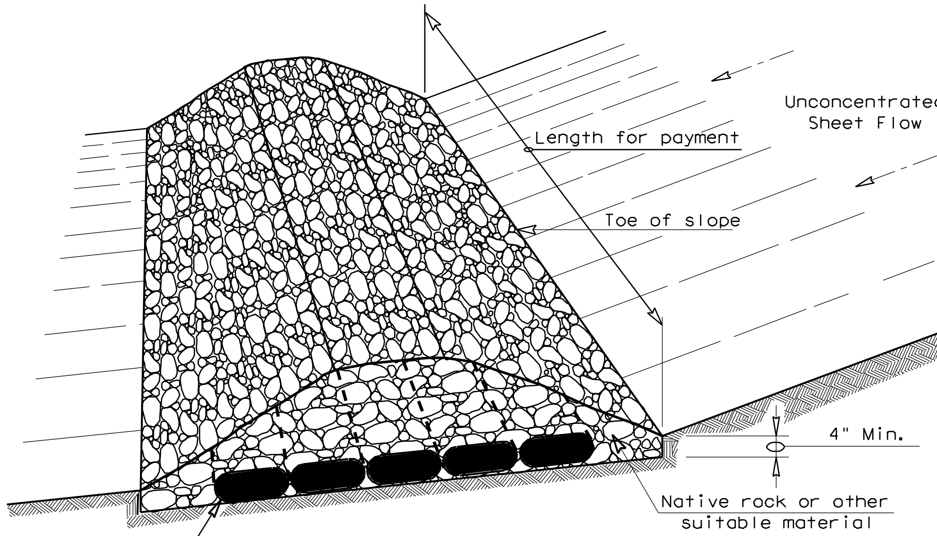

FILTER DAM AT TOE OF SLOPE

RFD1
TYPE 1

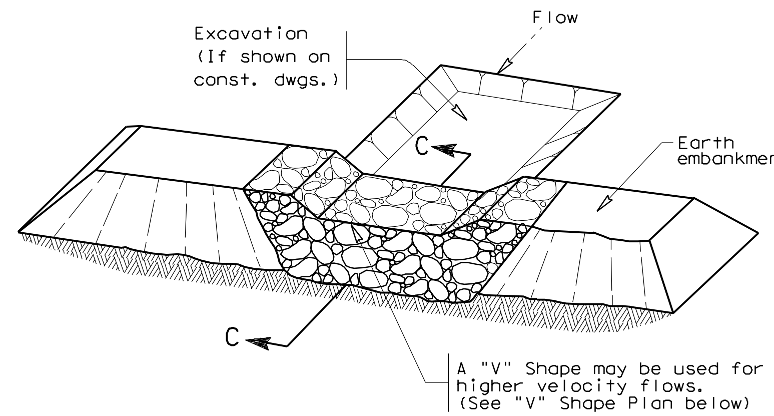

FILTER DAM AT SEDIMENT TRAP

RFD1 OR RFD2
TYPE 1 OR TYPE 2

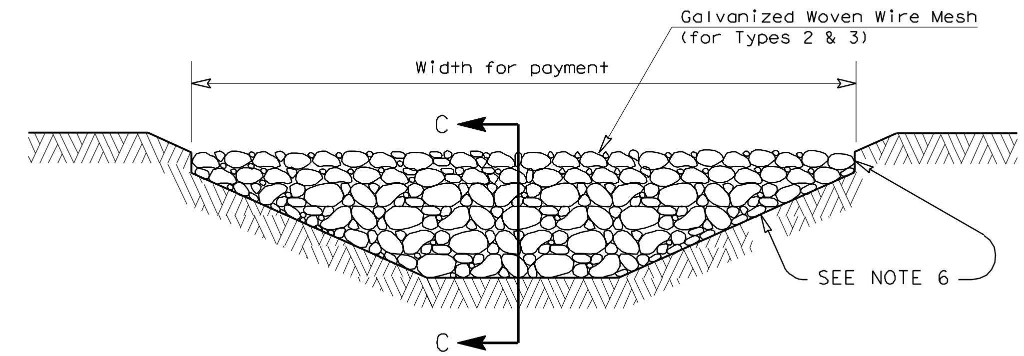

FILTER DAM AT CHANNEL SECTIONS

RFD1 OR RFD2 OR RFD3
TYPE 1 OR TYPE 2

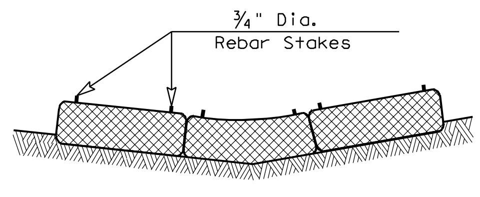

SECTION B-B

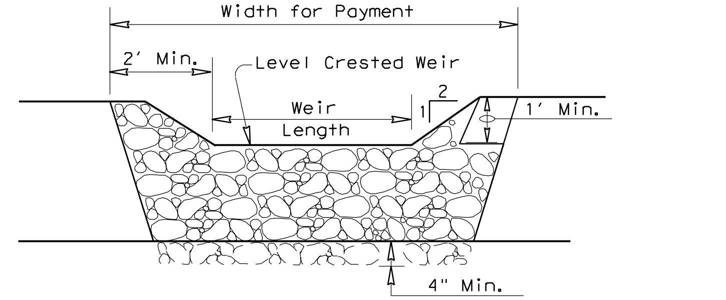

PROFILE

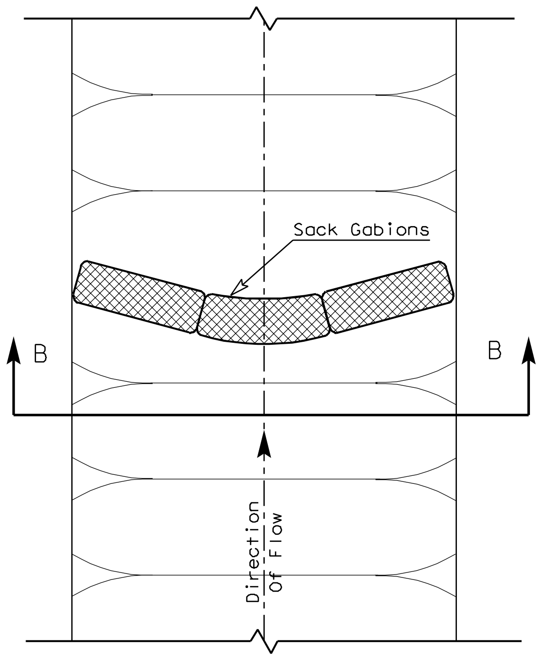

PLAN VIEW

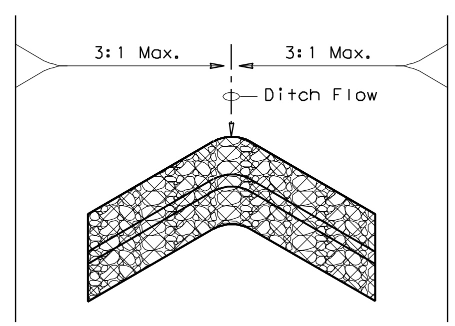

"V" SHAPE

(Plan View)

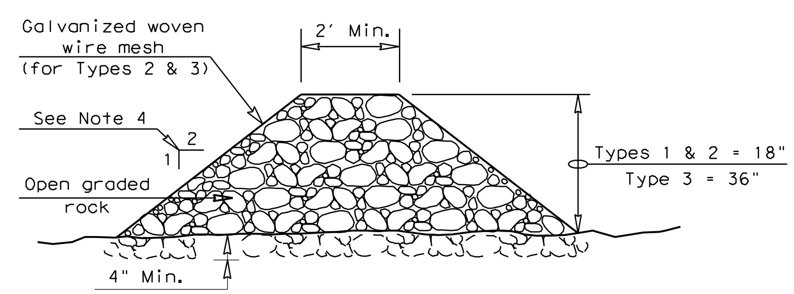

SECTION C-C

PLANS SHEET LEGEND

Type 1 Rock Filter Dam — RFD1

Type 2 Rock Filter Dam — RFD2

Type 3 Rock Filter Dam — RFD3

ROCK FILTER DAM USAGE GUIDELINES

Rock Filter Dams should be constructed downstream from disturbed areas to intercept sediment from overland runoff and/or concentrated flow. The dams should be sized to filter a maximum flow through rate of 60 GPM/FT^2 of cross sectional area. A 2 year storm frequency may be used to calculate the flow rate.

Type 1 (18" high with no wire mesh): Type 1 may be used at the toe of slopes, around inlets, in small ditches, and at dike or swale outlets. This type of dam is recommended to control erosion from a drainage area of 5 acres or less. Type 1 may not be used in concentrated high velocity flows (approx. 8 Ft/Sec or more) in which aggregate wash out may occur. Sandbags may be used at the embedded foundation (4" deep min.) for better filtering efficiency of low flows if called for on the plans or directed by the Engineer.

Type 2 (18" high with wire mesh): Type 2 may be used in ditches and at dike or swale outlets.

Type 3 (36" high with wire mesh): Type 3 may be used in stream flow and should be secured to the stream bed.

Type 4 (Sack gabions): Type 4 May be used in ditches and smaller channels to form an erosion control dam.

GENERAL NOTES

1. If shown on the plans or directed by the Engineer, filter dams should be placed near the toe of slopes where erosion is anticipated, upstream and/or downstream at drainage structures, and in roadway ditches and channels to collect sediment.
2. Materials (aggregate, wire mesh, sandbags, etc.) shall be as indicated by the specification for "Rock Filter Dams for Erosion and Sedimentation Control".
3. The rock filter dam dimensions shall be as indicated on the SW3P plans.
4. Side slopes should be 2:1 or flatter. Dams within the safety zone shall have sideslopes of 6:1 or flatter.
5. Maintain a minimum of 1' between top of rock filter dam weir and top of embankment for filter dams at sediment traps.
6. Filter dams should be embedded a minimum of 4" into existing ground.
7. The sediment trap for ponding of sediment laden runoff shall be of the dimensions shown on the plans.
8. Rock filter dam types 2 & 3 shall be secured with 20 gauge galvanized woven wire mesh with 1" diameter hexagonal openings. The aggregate shall be placed on the mesh to the height & slopes specified. The mesh shall be folded at the upstream side over the aggregate and tightly secured to itself on the downstream side using wire ties or hog rings. In stream use the mesh should be secured or staked to the stream bed prior to aggregate placement.
9. Sack Gabions should be staked down with ¾" dia. rebar stakes.
10. Flow outlet should be onto a stabilized area (vegetation, rock, etc.).
11. The guidelines shown hereon are suggestions only and may be modified by the Engineer.

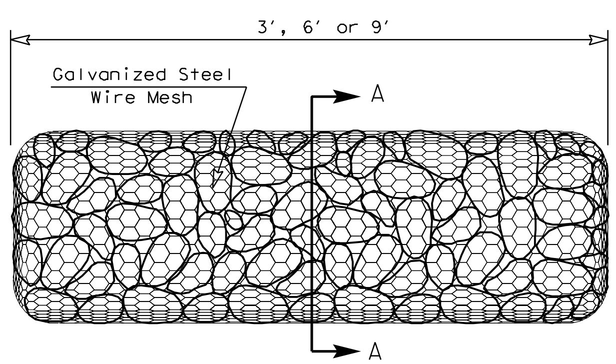

TYPE 4 (SACK GABIONS)

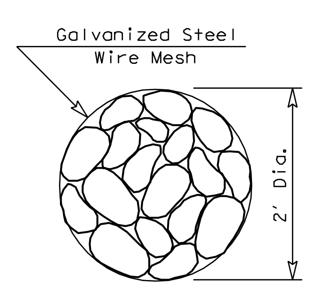

SECTION A-A

DISCLAIMER:
The use of this standard is governed by the "Texas Engineering Practice Act". No warranty of any kind is made by TxDOT for any purpose whatsoever. TxDOT assumes no responsibility for the conversion of this standard to other formats or for incorrect results or damages resulting from its use.

Texas Department of Transportation
Design Division (Roadway)

TEMPORARY EROSION, SEDIMENT AND WATER POLLUTION CONTROL MEASURES

ROCK FILTER DAMS

EC(2)-93

FILE: EC293.DGN	DN: HEJ	CK: HEJ	DW: BGD	CK:
© TxDOT JUNE 1993	DISTRICT	FEDERAL AID PROJECT		SHEET
REVISIONS				328
	COUNTY	CONTROL	SECT	JOB	HIGHWAY