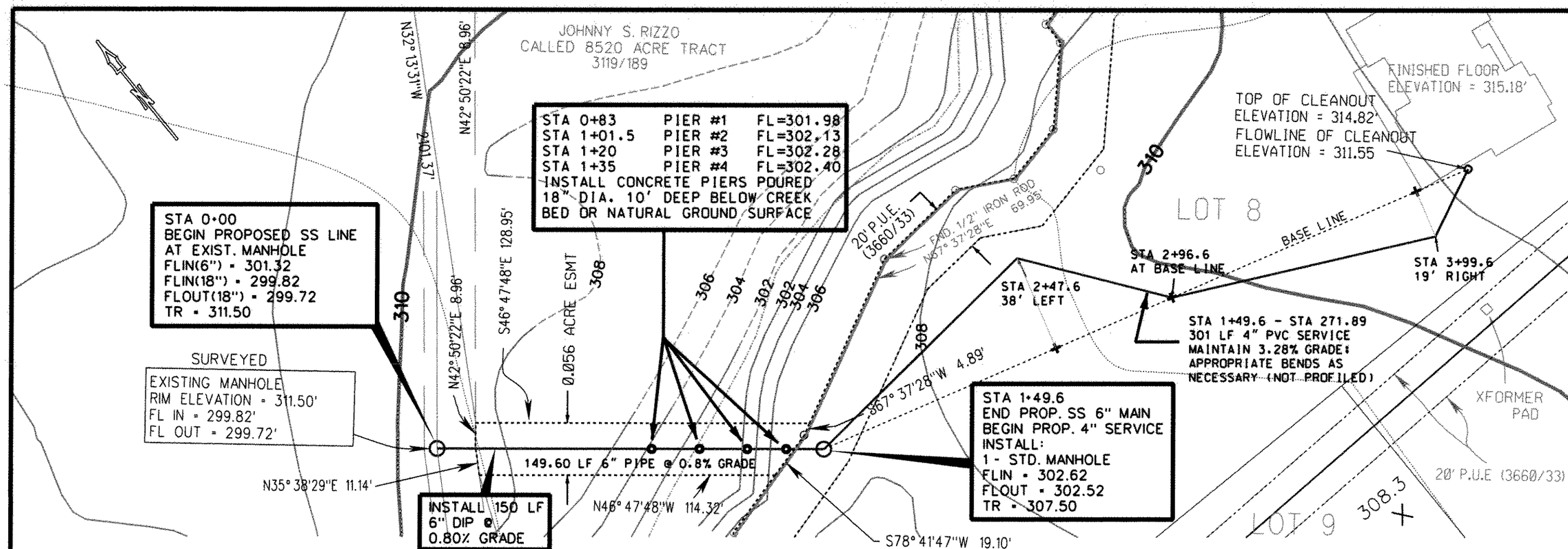

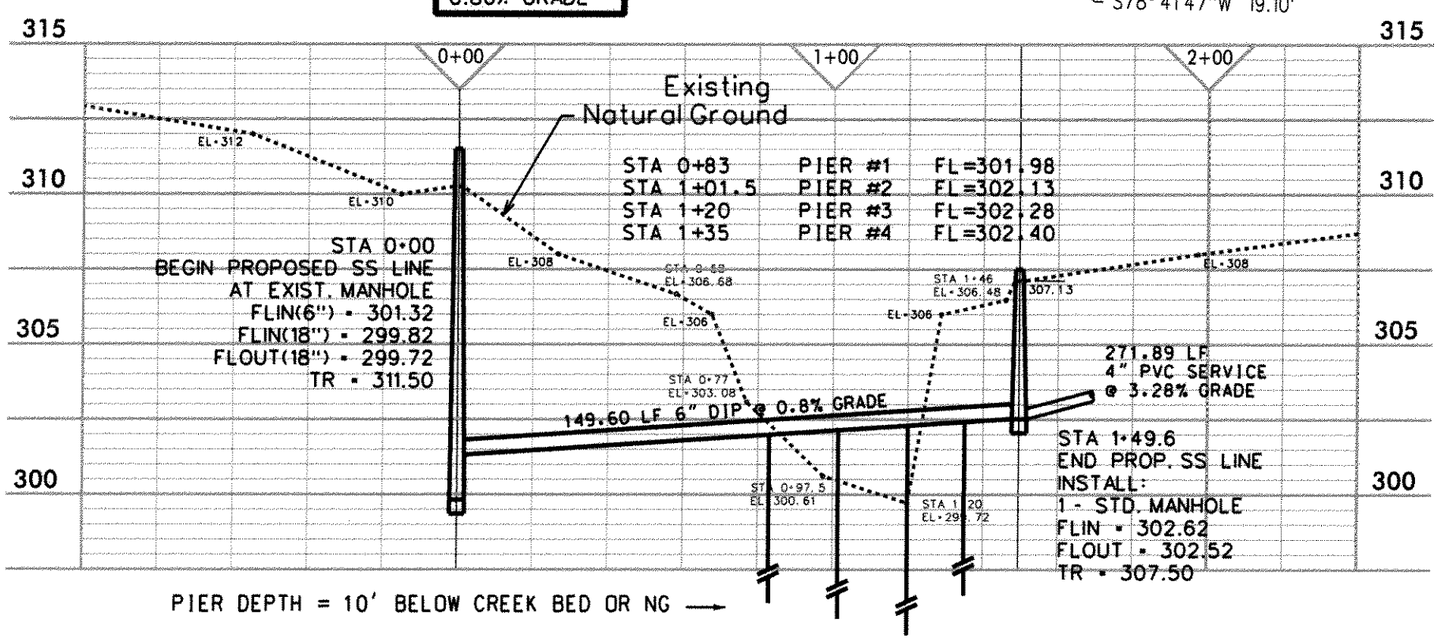

STATE OF TEXAS
W. PAUL KASPAR
86293
LICENSED
PROFESSIONAL ENGINEER

1/17/06

W. Paul Kaspar

The seal appearing on this document was authorized by W. Paul Kaspar, P.E., 86293. Alteration of a sealed document without proper notification to the responsible engineer is an offense under the Texas Engineering Practice Act. This document is released for construction purposes on January 17, 2006.

REV.	DATE	DETAILS
1	1/12	CHANGE ORDER #1

AUSTIN'S ESTATES
SEWER IMPROVEMENTS
CITY JOB NUMBER 411-D4-0516

CITY OF BRYAN
The Good Life, Texas Style.

LOCATION
AUSTIN'S ESTATES
AUSTIN'S LANDING

DRAWN BY: J.A.S.
DATE: DEC 20, 2005
SCALE: 1" = 40' H. 1" = 5' V.
APPR: M.T.M.

FIGURE:
C-1

SHEET 1 of 1

NOTES:

1. EACH PIER SHALL BE COMPLETED IN A SINGLE CONTINUOUS POUR.
2. CHAMFER EDGES 3/4".
3. CONTRACTOR SHALL CONSTRUCT CONCRETE PIER TO A MINIMUM DEPTH OF 6' OR TO A DEPTH WHERE A GOOD BEARING SOIL IS ENCOUNTERED.
4. ALL SHAFTS SHALL BE BORED VERTICALLY PLUMB WITHIN 2" TOLERANCE.
5. ALL INFORMATION SHOWN IS CITY MINIMUM. ALL PIERS SHALL BE DESIGNED BY A PROFESSIONAL ENGINEER.

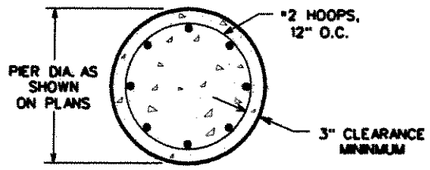

SECTION A-A

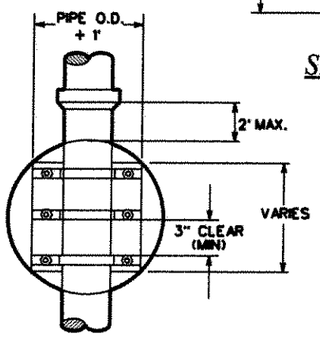

PLAN

PIER DIAMETER	VERTICAL STEEL #5 BARS
16"	8
24"	12
26"	14
30"	16
42"	24

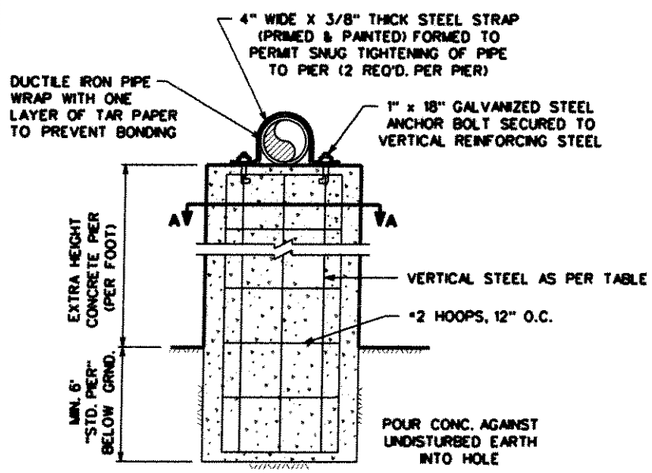

TYPICAL CONCRETE DRILLED PIER FOR AERIAL SEWER

S1-00

NOTE:

MANHOLE BASE SHALL BE PLACED ON FIRM SUBGRADE. ADDITION OF CEMENT STABILIZED SAND OR GRAVEL MAY BE REQUIRED TO STABILIZE FOUNDATION.

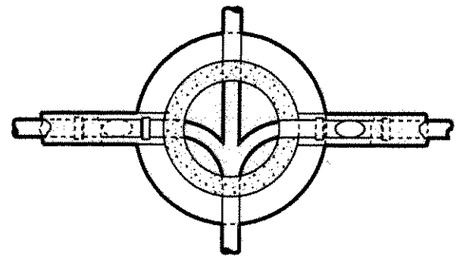

SECTION A - A

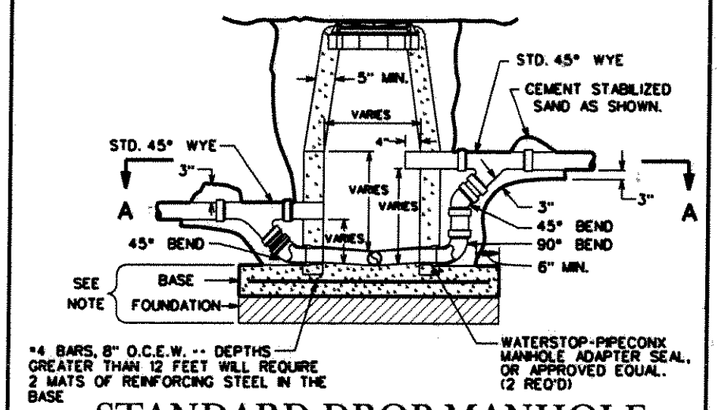

STANDARD DROP MANHOLE

NOTE: CAP CLEAN-OUT AT BLIND FLANGE ON RESTRAINED JOINT FOR FORCE MAINS.

S1-01

NOTES:

1. A MAX. OF 4 AND A MIN. OF 2 THROAT RINGS SHALL BE USED AT EACH MANHOLE IN NEW OR EXISTING RIGHT-OF-WAY.
2. USE ADEKA SEALANT OR APPROVED EQUAL BETWEEN RING/COVER, ADJUSTMENT RINGS AND CHIMNEY OR CORBEL/CONE SECTION.
3. MANHOLE BASE THICKNESS AND FOUNDATION AS FOLLOWS:

MANHOLE DEPTH (FT.)	BASE THICKNESS
0 - 12	8"
12 AND OVER	12"

4. MANHOLE LOCATION AND COMPACTION AS FOLLOWS:

LOCATION	COMPACTION REQUIREMENT
PAVEMENT	98 % STANDARD PROCTOR - ASTM D 698
LANDSCAPE AREA	90 % STANDARD PROCTOR - ASTM D 698

5. NO RINGS ARE REQUIRED OUTSIDE OF STREET RIGHT-OF-WAY
6. IN FLOODPLAINS, THE CONE SHALL EXTEND ABOVE THE BASE FLOOD ELEVATION OR A BOLT DOWN WATER-TIGHT RING AND COVER SHALL BE USED.
7. WARNING SIGN ONLY TO BE PLACED WHERE SEWER CROSSES OPEN FIELDS.

MANHOLE DIA.	MAIN SIZE
4 FT	<18in.
5 FT	≥18in. <30in.
6 FT	≥36in.

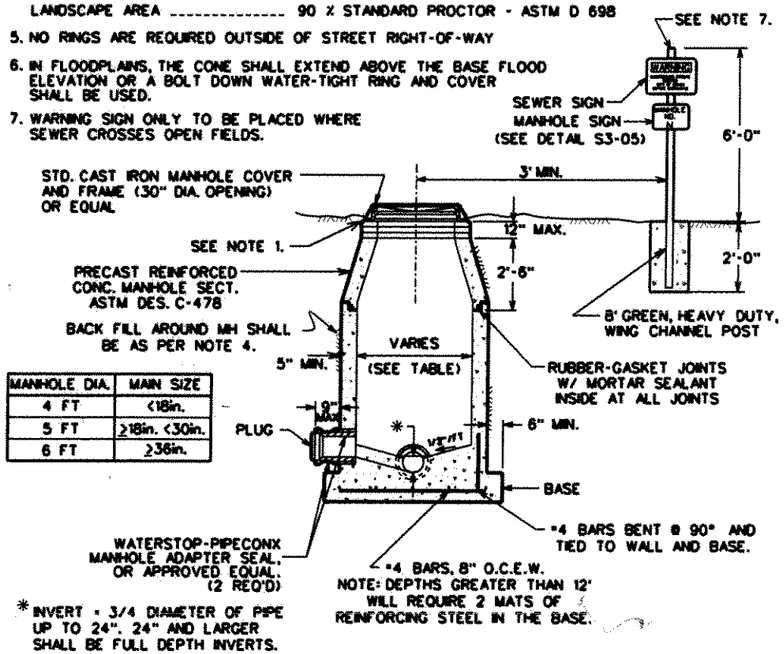

* INVERT = 3/4 DIAMETER OF PIPE UP TO 24". 24" AND LARGER SHALL BE FULL DEPTH INVERTS.

STANDARD MANHOLE

S1-02

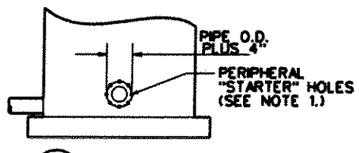

1/A OPENING CREATION DETAIL

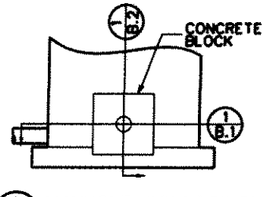

1/B MANHOLE CONNECTION DETAIL

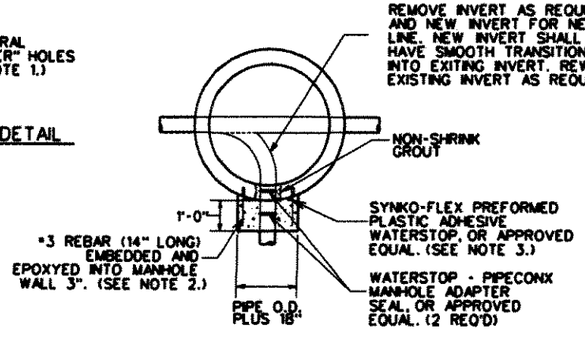

1/B.1 CONNECTION DETAIL SECTION VIEW

NOTES:

1. 1" DIA. "STARTER" HOLES SHALL BE DRILLED THROUGH WALL OF EXISTING MANHOLE SPACED 3" APART CENTER TO CENTER. AFTER "STARTER" HOLES HAVE BEEN INSTALLED AND APPROVED BY A CITY INSPECTOR, THE CONTRACTOR SHALL BEGIN REMOVING THE CONCRETE INSIDE THE PERIPHERAL "STARTER" HOLES. CONCRETE SHALL BE REMOVED WITH PNEUMATIC HAND TOOLS.
2. THE NUMBER OF REBAR DOWELS SHALL VARY WITH SIZE OF OPENING. REBAR SHALL NOT BE SPACED MORE THAN 12" CC.
3. WATERSTOP SHALL BE INSTALLED IN STRICT ACCORDANCE WITH MANUFACTURERS REQUIREMENTS.
4. CONCRETE SHALL BE 3,000 P.S.I.

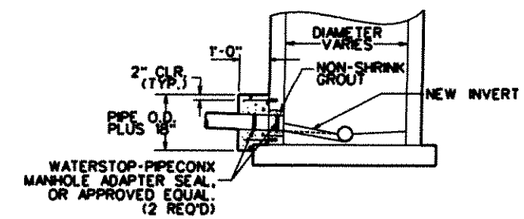

1/B.2 CONNECTION DETAIL SECTION VIEW

STANDARD MANHOLE TIE-IN

S1-03

REVISIONS: Detail S1-00,S1-02-June 2005

BRYAN - COLLEGE STATION
STANDARD SEWER DETAILS

CITY OF COLLEGE STATION

CITY OF BRYAN
The Good Life, Texas Style.™

DRAWN BY: C.L.M.
DATE: 01-01-05
SCALE: N T S
APPROVED: W.P.K.

FIGURE: S1

SHEET 1 OF 4

NOTE:

1. WHERE DOUBLE WYE SERVICE ELEVATION IS LESS THAN 2'-7" BELOW PROPOSED BACK OF CURB, MIN. SLAB ELEV. MUST BE SET TO ALLOW SANITARY SEWER SERVICE.
2. MARK EACH SERVICE END WITH METAL "T" POST PAINTED GREEN.
3. ALL MATERIAL SHALL BE SCH 40 BELL END PIPE W/ GLUED JOINTS.
4. NO COUPLINGS WILL BE ALLOWED UNDER PAVEMENT AREAS.
5. A CLEAN OUT IS REQUIRED AND WILL BE INSTALLED BY THE PLUMBER AT THE ROW FOR EACH SERVICE.

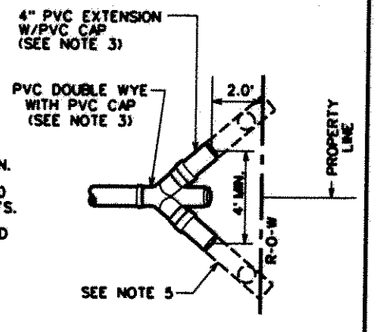

PLAN

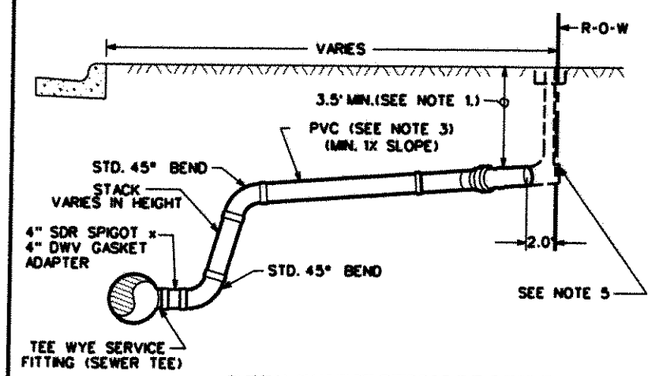

DEEP CONNECTION PROFILE

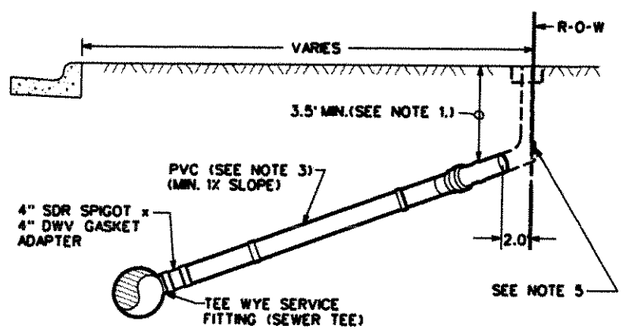

STANDARD CONNECTION PROFILE

SANITARY SEWER SERVICE CONNECTION

S2-00

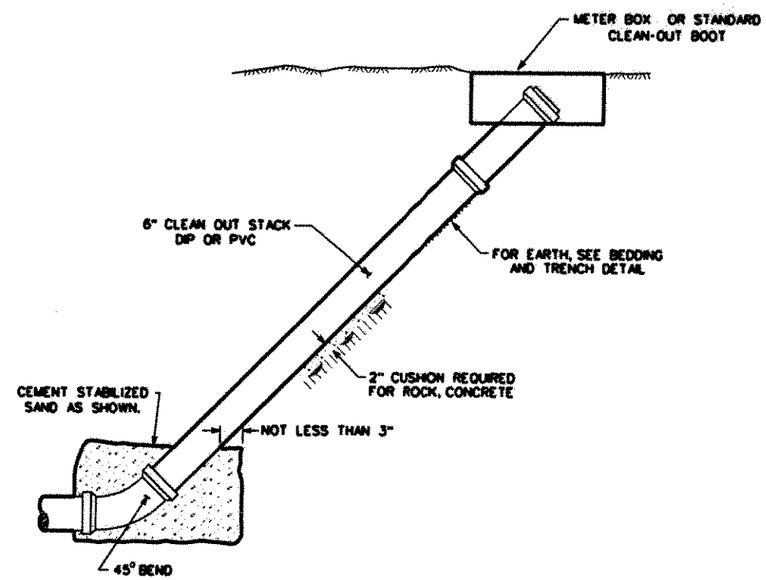

STANDARD CLEAN OUT FOR MAIN LINE

S2-01

GENERAL NOTES:

ALL AREAS WHERE EXISTING VEGETATION AND GRASS COVER HAVE BEEN BARED BY CONSTRUCTION SHALL BE ADEQUATELY BLOCK SODDED OR HYDROMULCHED AND WATERED UNTIL GROWTH IS ESTABLISDHED. IN DEVELOPED AREAS WHERE GRASS IS PRESENT, BLOCK SOD WILL BE REQUIRED. BARED AREAS SHALL BE SEEDED OR SODDED WITHIN 14 CALENDAR DAYS OF LAST DISTURBANCE.

APPROVED EROSION CONTROL MEASURES MUST BE INSTALLED DURING THE ENTIRE TIME THAT EARTH HAS BEEN BARED BY CONSTRUCTION AND SHALL STAY IN PLACE UNTIL ACCEPTABLE VEGETATIVE GROWTH IS ESTABLISHED AFTER CONSTRUCTION IS COMPLETE AND THEN REMOVED BY CONTRACTOR.

ALL EROSION CONTROL MEASURES SHOULD BE CLEANED OF SILT AFTER EVERY RAIN.

ESTABLISHMENT OF VEGETATION MAY BE A WARRANTY ITEM.

Ⓐ SELECT NATIVE MATERIAL
MATERIAL EXCAVATED FROM THE DITCH, (WHICH IS FREE OF ROCKS, LUMPS, CLODS, OR DEBRIS LARGER THAN TWO (2) INCHES IN THE LARGEST DIMENSION), COMPACTED TO A MINIMUM OF 90% OF MAXIMUM DENSITY AS DETERMINED BY ASTM D698 (STANDARD) AT A MOISTURE CONTENT WITHIN OPTIMUM TO +4% OF OPTIMUM UNDER NON-STRUCTURAL AREAS (ie...YARDS, PASTURES, EASEMENTS) AND TO A MINIMUM OF 98% OF MAXIMUM DENSITY AS DETERMINED BY ASTM D698 (STANDARD) AT A MOISTURE CONTENT WITHIN OPTIMUM TO +4% OF OPTIMUM UNDER FUTURE STREET AREAS.

Ⓑ GRANULAR MATERIAL
MATERIAL SHALL BE BANK RUN RIVER SAND WHICH IS FREE OF DETRIMENTAL QUANTITIES OF CLAY, DEBRIS, OR ORGANIC MATERIAL AND WHICH, WHEN TESTED BY STANDARD LABORATORY METHODS, MEET THE FOLLOWING REQUIREMENTS:

MAXIMUM LIQUID LIMIT	45
MAXIMUM PLASTICITY INDEX	15
MAXIMUM PERCENT PASSING NO. 200 SIEVE	35
MINIMUM PERCENT PASSING 3/4" SIEVE	100

THE MATERIAL SHALL BE FREE FLOWING AND WHEN WET, SHALL NOT ADHERE TO FORM A BALL WHEN PRESSED IN THE HAND. COMPACTED CEMENT STABILIZED SAND, 1-1/2 SACK/CY (PUGMILL ONLY). SPADE BY LIFTS INTO PLACE, TO FILL ALL VOIDS AROUND PIPE. MANUALLY CONSOLIDATE AT OPTIMUM MOISTURE.

Ⓒ CEMENT STABILIZED SAND

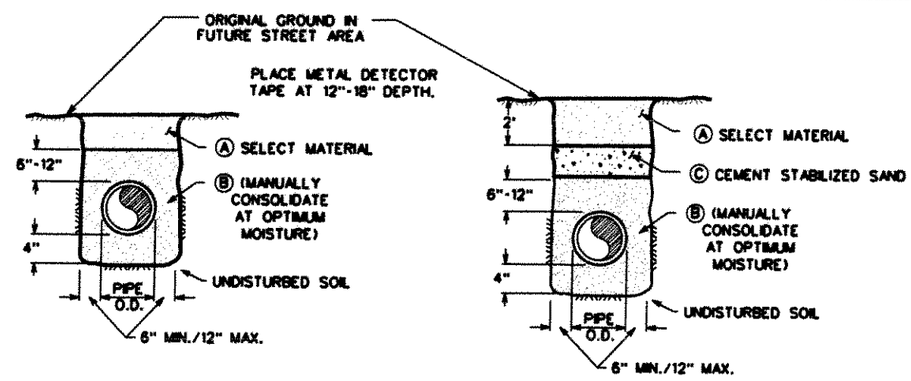

NOTES:

1. FOR BEDDING AND TRENCHING WITHIN EXISTING STREETS SEE DETAILS FOR OPEN CUT STREETS.
2. ALL BEDDING & INSTALLATION OF PVC PIPE SHALL BE IN ACCORDANCE TO ANSI/AWWA STANDARDS FOR PVC PIPE.
3. ALL BEDDING & INSTALLATION OF DUCTILE IRON PIPE SHALL BE IN ACCORDANCE TO ANSI/AWWA C150/A21.50.
4. COMPACTION SHALL BE ATTAINED BY MECHANICAL TAMPING.
5. SEDIMENT RESULTING FROM THE CONTRACTOR'S PERFORMANCE OF THE WORK, EITHER INSIDE OR OUTSIDE THE RIGHT OF WAY, SHALL BE CONTROLLED BY THE CONTRACTOR.
6. ALL TRENCHES SHALL BE BACK FILLED AND TEMPORARY PAVING OR PLANKING PLACED AT THE END OF EACH WORKING DAY.
7. TWENTY-FOUR (24) HOUR NOTIFICATION TO ENGINEERING IS REQUIRED PRIOR TO COMMENCEMENT OF WORK.

BEDDING AND TRENCH FOR DI PIPE & PVC PIPE

S2-02

REVISIONS:
Detail S2-00 & S2-02 - June 2006

BRYAN - COLLEGE STATION
STANDARD SEWER DETAILS

CITY OF COLLEGE STATION

CITY OF BRYAN
The Good Life, Texas Style.™

DRAWN BY: C.L.M.
DATE: 01-01-05
SCALE: N T S
APPROVED: W.P.K.
FIGURE:
S2
SHEET 2 OF 4

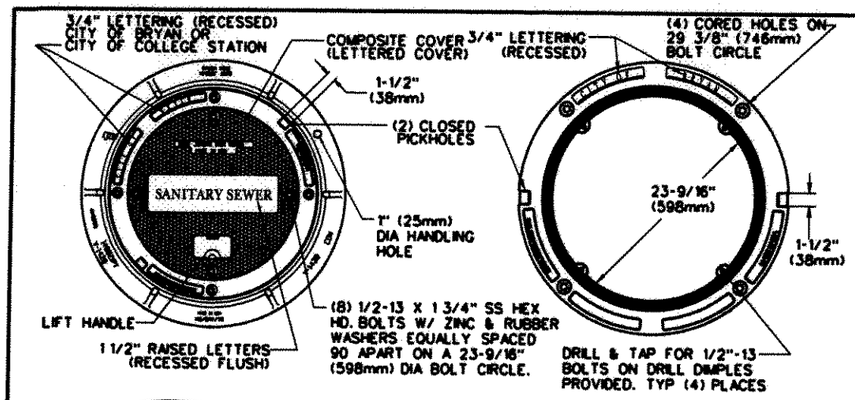

PLAN VIEW

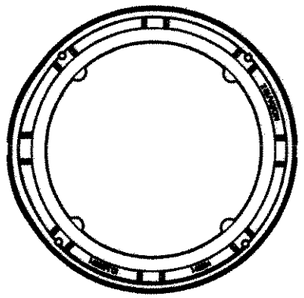

BOTTOM VIEW

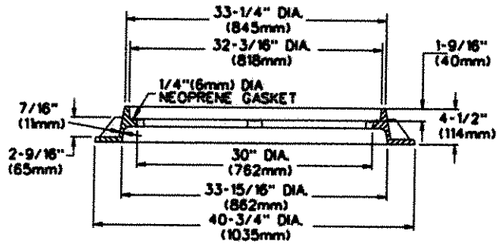

FRAME SECTION

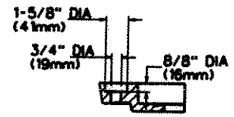

BOLT HOLE DETAIL

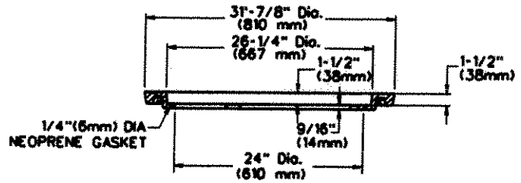

INNER COVER SECTION

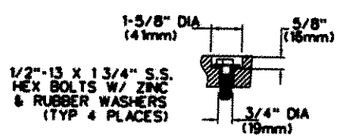

MOLDED C'BORED BOLT HOLE
(FRAME IS DRILLED AND TAPPED)

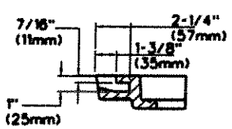

INNER COVER
PICKHOLE DETAIL

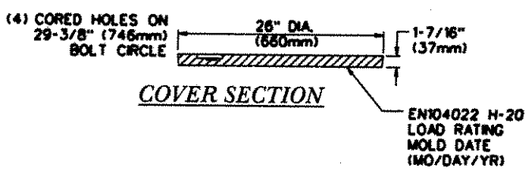

COVER SECTION

STANDARD MANHOLE RING AND COVER

WHEN MANHOLE IS > 3' ABOVE GROUND

S4-01

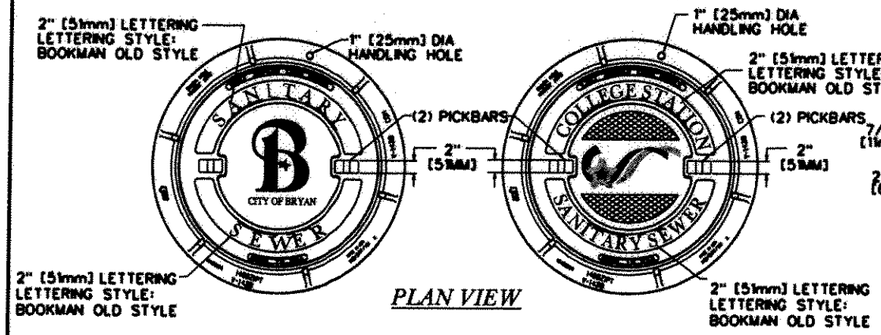

PLAN VIEW

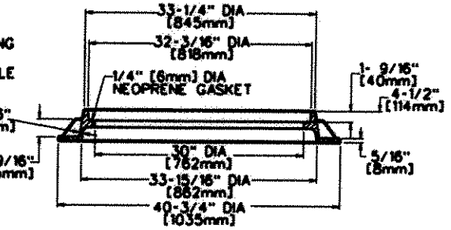

FRAME SECTION

√ MACHINED SURFACE

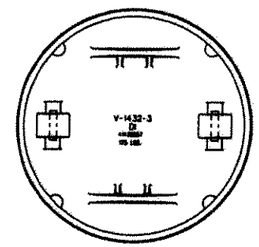

BOTTOM VIEW
OF COVER

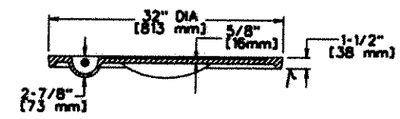

COVER SECTION

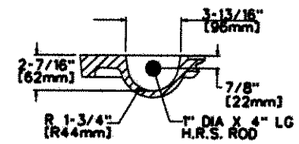

PICKBAR DETAIL

STANDARD MANHOLE RING AND COVER

S4-02

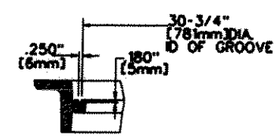

MACHINE GROOVE
DETAIL

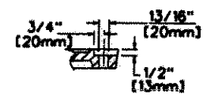

BOLT HOLE SECTION

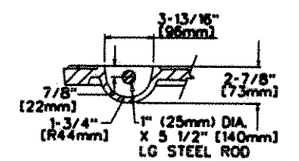

PICKBAR DETAIL

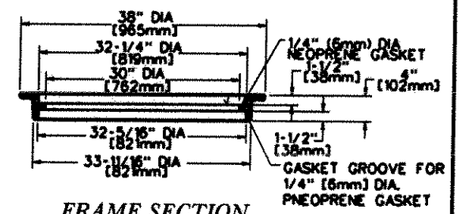

FRAME SECTION

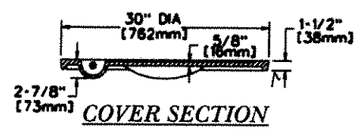

COVER SECTION

√ MACHINED SURFACE

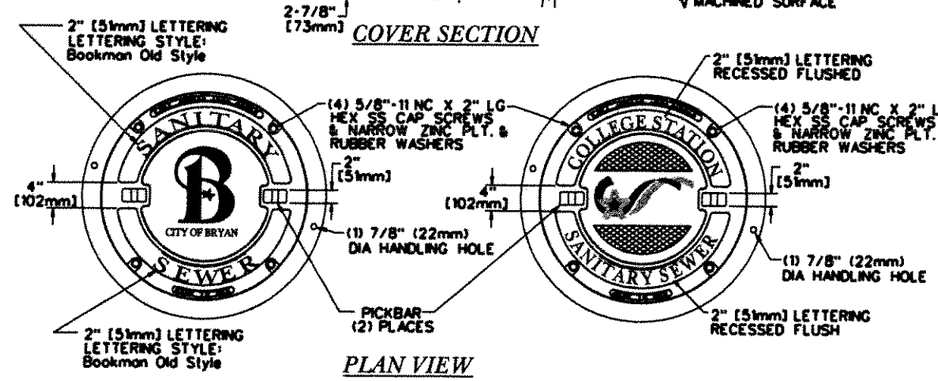

PLAN VIEW

BOTTOM VIEW

WATER TIGHT MANHOLE RING AND COVER

S4-03

REVISIONS:
Detail S4-01,S4-02,S4-03 - June 2005

BRYAN - COLLEGE STATION
STANDARD SEWER DETAILS

CITY OF COLLEGE STATION

CITY OF BRYAN
The Good Life, Texas Style.™

DRAWN BY: C.L.M.
DATE: 01-01-05
SCALE: N T S
APPROVED: W.P.K.

FIGURE:
S4
SHEET 4 OF 4