THORNBERRY DRIVE

BRYAN, TEXAS

DECEMBER, 2009

LEGEND

	Electrical Manhole		Power Pole
	Ex. Fire Hydrant		Ex. Sewer Manhole
	Gas Meter		Storm Drain Manhole
	GTE Manhole		Street Sign
	Guy Anchor		Water Valve
	Light Pole		

	Ambulatory Ramp
—— G —— G ——	Gas Line
— — — T — — — T —	Telephone Cable
— — FO — —	Fiber Optics Cable
— — OE — —	Overhead Electrical Line
—— UE —— UE ——	Underground Electric Line
224	Ex. Ground Contour Line
—— 224 ——	Prop. Finish Grade Contour
—— X —— X ——	Wire Fence
	Chain Link Fence
	Pipe Fence w/ Cable
	Subdivision Boundary
	Prop. R.O.W. Line
	Easement Lines

ABBREVIATIONS

BM	BENCHMARK	PC	POINT OF CURVATURE
CFS	CUBIC FEET PER SECOND	PRC	POINT OF REVERSE CURVATURE
℄	CENTERLINE	PCC	POINT OF COMPOUND CURVATURE
CMP	CORRUGATED METAL PIPE	PROP.	PROPOSED
CONC.	CONCRETE	PT	POINT OF TANGENCY
DIA	DIAMETER	P.A.E.	PUBLIC ACCESS EASEMENT
DIP	DUCTILE IRON PIPE	P.U.E.	PUBLIC UTILITY EASEMENT
ELEV.	ELEVATION	PVC	POLYVINYL CHLORIDE
E.O.P.	EDGE OF PAVEMENT	R	RADIUS
EX.	EXISTING	R.O.W.	RIGHT OF WAY
F.H.	FIRE HYDRANT	S.D.	STORM DRAIN
FL	FLOW LINE	SF	SQUARE FEET
FT.	FOOT (FEET)	SY	SQUARE YARD
GALV.	GALVANIZED	STA.	STATION
HDPE	HIGH DENSITY POLYETHYLENE	STD.	STANDARD
H.P.	HIGH POINT	SW	SOLVENT WELD
HGL	HYDRAULIC GRADE LINE	TBM	TEMPORARY BENCHMARK
IN.	INCH	T/C	TOP OF CURB
L.F.	LINEAR FEET	T/GRATE	TOP OF GRATE
MH	MANHOLE	T/INLET	TOP OF INLET
MIN.	MINIMUM	T/MH	TOP OF MANHOLE
MISC.	MISCELLANEOUS	TEL.	TELEPHONE
NG	NATURAL GROUND	VPC	VERTICAL POINT OF CURVATURE
OC	ON CENTER	VPI	VERTICAL POINT OF INTERSECTION
OCEW	ON CENTER EACH WAY	VPT	VERTICAL POINT OF TANGENCY
O.D.	OUTSIDE DIAMETER	WS	WATER SERVICE

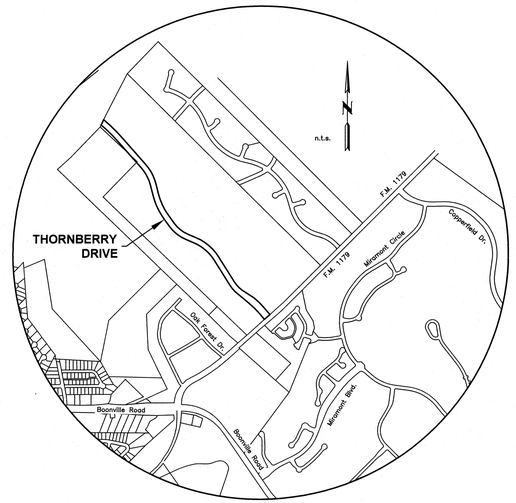

VICINITY MAP

SCALE: N.T.S.

INDEX OF SHEETS

CIVIL	
Cover Sheet & Legend	1
Overall Plan	2
Sta. 10+00 – 20+00 Plan & Profile	3
Sta. 20+00 – 30+00 Plan & Profile	4
Sta. 30+00 – 40+00 Plan & Profile	5
Sta. 40+00 – 50+00 Plan & Profile	6
Sta 50+00 – FM 1179 Plan & Profile	7
Culvert Plan & Profile	8
Striping and Signing Plan	9
Sidewalk Plan & Profile	10
Sidewalk Plan & Profile	11
Sidewalk Plan & Profile	12
Sidewalk Plan & Profile	13
Sidewalk Plan & Profile	14
Storm Drain Plan & Profile	15
Storm Drain Plan & Profile	16
FM 1179 Improvements	17
Initial Erosion Control Plan	18
Miscellaneous Details	19
Pavement Markings Details	22D
Sign Mounting Details	26A
Concrete Headwalls	PW
Concrete Headwalls (Flared Wingwalls)	FW–O
Concrete Headwalls (Straight Wingwalls)	SW–O
Box Culvert Precast Miscellaneous Details	SCP–MD
Single Box Culverts Precast 7'–0" Span	SCP–7
Single Box Culverts Precast 8'–0" Span	SCP–8

Prepared For :
City of Bryan
P.O. Box 1000
Bryan, Texas 77802
(979) 209-5030

Prepared By :
McClure & Browne
Engineering/Surveying, Inc.
1008 Woodcreek Drive, Suite 103
College Station, Texas 77845
(979) 693-3838

City Officials :

Mayor	*D. Mark Conlee*
Mayor Pro Tem	*Jason Bienski*
Council Members	
	Al Saenz
	Paul Madison, Sr.
	Jason Bienski
	Ann Horton
	Art Hughes
	Mike Southerland
City Engineer	*W. Paul Kaspar, P.E.*

CITY OF BRYAN
The Good Life, Texas Style.™

STATE OF TEXAS
12/16/09
JEFFERY L. ROBERTSON
94745
LICENSED
PROFESSIONAL ENGINEER

ISSUED FOR BIDDING AND CONSTRUCTION.

DATE: DEC. 2009
DRAWN BY: DRL
DESIGNED BY: SCF
CHECKED BY: JLR
10010013–005–cvr.dwg

REVISIONS
1 12/16/09–JLR–Revised per City Comments.

McCLURE & BROWNE
ENGINEERING/SURVEYING, INC.
1008 Woodcreek Drive, Suite 103
College Station, Texas 77845
(979) 693-3838

Cover Sheet & Legend
THORNBERRY DRIVE

SHEET NO.
1
OF 19 SHEETS

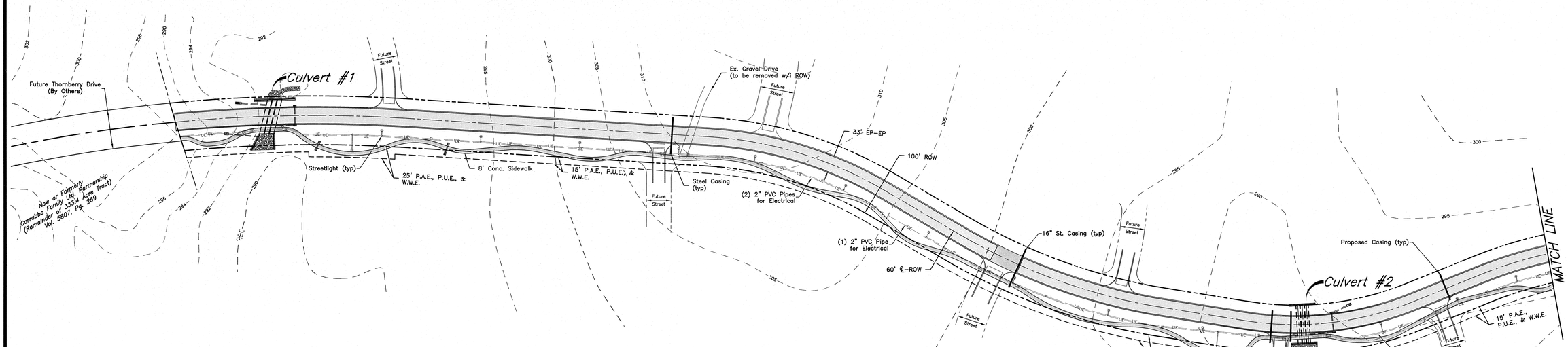

OVERALL PLAN (STA. 10+00 to STA. 39+00)

SCALE: Hor: 1" = 100'

0 50' 100' 200'

GENERAL CONSTRUCTION NOTES:

1. It shall be the responsibility of the Contractor to verify the exact location of all underground utilities. Contact the following a minimum of 72 hours in advance of any excavation:
   a. Dig Tess 1-800-344-8377
   b. City of Bryan Water Services 979-209-5900
2. All construction shall be in accordance with the City of Bryan design guidelines, construction specifications, & details.
3. In lieu of using the construction materials indicated in these plans, the Contractor shall obtain written approval from the City Engineer for any substitution.
4. These plans do not include necessary components for construction safety. Trench Safety Requirements shall be in accordance with O.S.H.A. Standard 29 CFR Part 1926 Subpart P.
5. It is the responsibility of the contractor to comply with all State and Federal Regulations regarding construction activities near energized overhead power lines. Additionally, the contractor shall coordinate all proposed work and procedures with the Bryan Texas Utilities (BTU).
6. Where a contradiction between plans and specifications occur, the plans shall be ruled as superior.
7. All materials and labor not identified as a Separate Bid Item shall be considered subsidiary to the item in which it is used.
8. Coordinate Information shown at strategic locations in these plans is intended to assist with construction layout. Coordinates are based on a local system.

EXCAVATION, EMBANKMENT AND COMPACTED FILL:

1. Prior to any excavation or embankment activity, the top six inches (6") of topsoil shall be removed and stockpiled for reuse on the completed surface as directed by the Engineer.
2. All embankment within the proposed and future rights of way shall conform to City of Bryan Specification No. 303. Each six inch (6") layer shall be compacted to 95% maximum dry density per ASTM D698 (Standard Procter.)
3. In all other areas, each layer of embankment shall be composed of material so graded that the density and uniformity of the surface layer may be secured by the Ordinary Compaction Method. Ordinary Compaction consists of rolling and sprinkling each embankment layer to the extent directed by the engineer. Each layer shall not exceed eight inches (8") of loose depth and shall be compacted with rolling equipment approved by the engineer. Compaction shall continue until there is no evidence of further compaction. Prior to and in conjunction with the rolling operation, each layer shall be brought to the moisture content directed by the engineer and shall be kept leveled with suitable equipment to insure uniform compaction of the entire layer. Should the subgrade, for any reason or cause, lose the required stability of finish, it shall be re-compacted and refinished at the contractor's expense.
4. The bid price for "ROADWAY EXCAVATION" shall constitute full payment for excavation, embankment, compacted fill and disposal of surplus material; installation and removal of all necessary sheeting and bracing; water and dewatering as necessary.

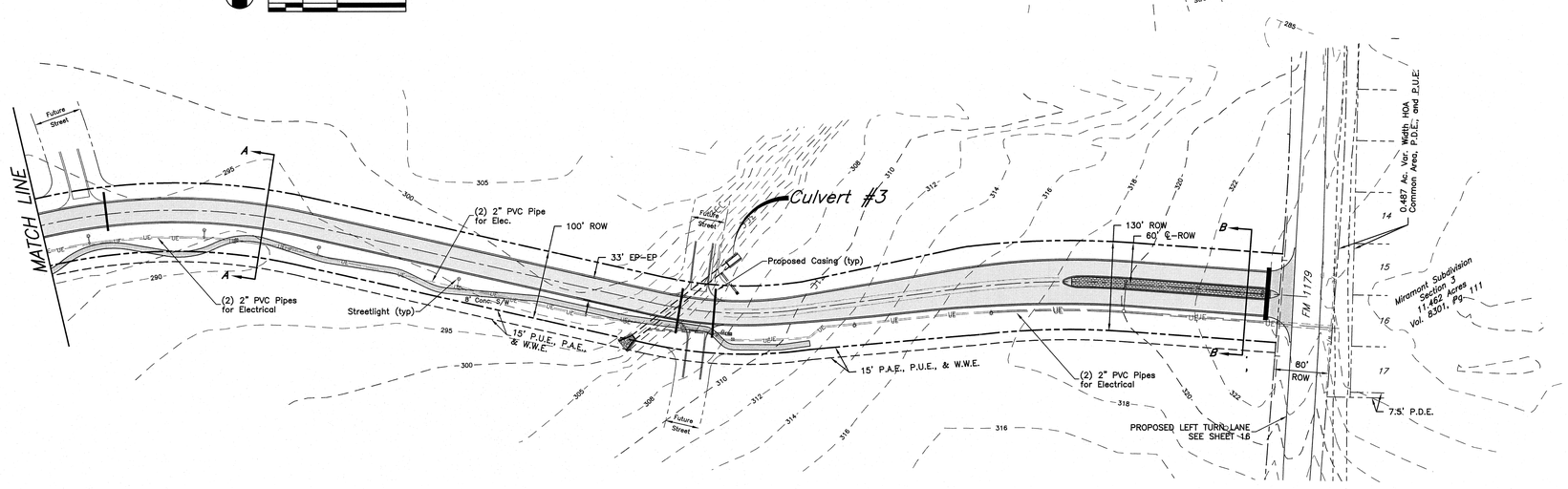

OVERALL PLAN (STA. 39+00 to FM 1179)

SCALE: Hor: 1" = 100'

0 50' 100' 200'

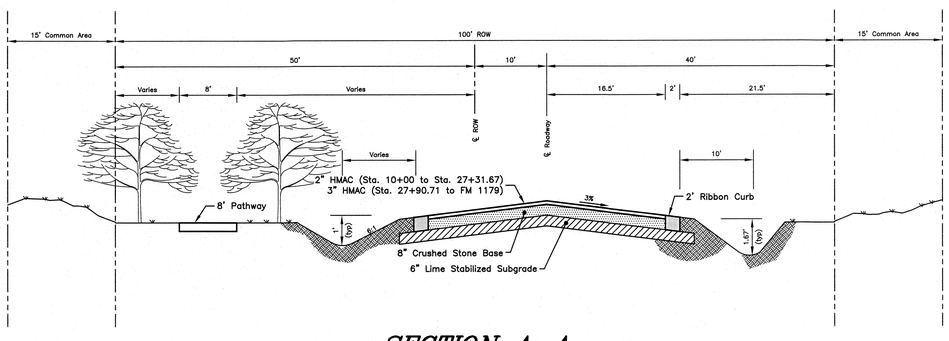

SECTION A-A

SCALE: Hor: 1" = 10'

0 5' 10' 20'

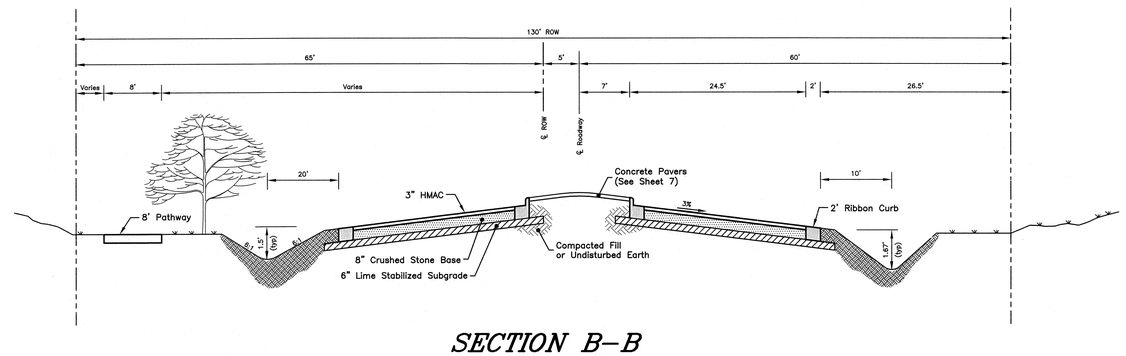

SECTION B-B

SCALE: Hor: 1" = 10'

0 5' 10' 20'

STATE OF TEXAS
JEFFERY L. ROBERTSON
94745
LICENSED PROFESSIONAL ENGINEER

ISSUED FOR BIDDING AND CONSTRUCTION.

DATE: DEC. 2009
DRAWN BY: DRL
DESIGNED BY: SCF
CHECKED BY: JLR
15010013-005-02.dwg

REVISIONS

McCLURE & BROWNE ENGINEERING/SURVEYING, INC.
1008 Woodcreek Drive, Suite 103
College Station, Texas 77845
(979) 693-3838

M&B

Overall Plan

THORNBERRY DRIVE

SHEET NO.
2
OF 19 SHEETS

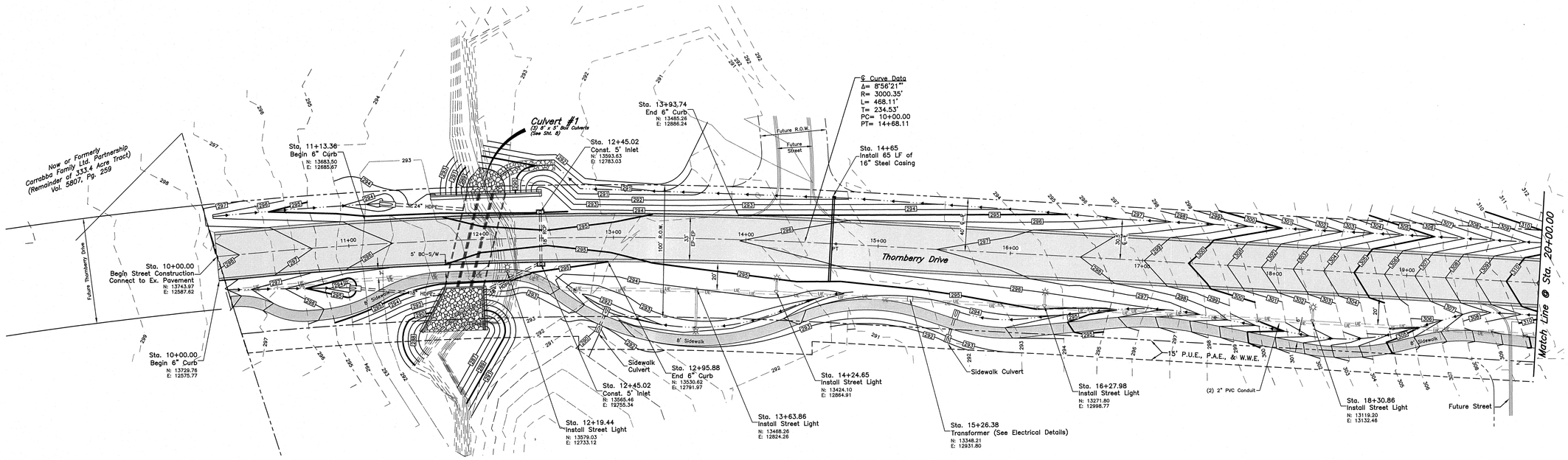

THORNBERRY DRIVE
Sta. 10+00 – 20+00

SCALE: Hor: 1" = 40'
Vert: 1" = 4'

0 20' 40' 80'

THESE PLANS DO NOT INCLUDE NECESSARY COMPONENTS FOR CONSTRUCTION SAFETY.

NOTE: LOCATION OF EXISTING BURIED UTILITIES, WHERE SHOWN, IS APPROXIMATE ONLY. THERE MAY EXIST UTILITIES WHICH ARE NOT SHOWN. THE CONTRACTOR SHALL BE RESPONSIBLE FOR LOCATING AND PROTECTING ALL BURIED UTILITIES.

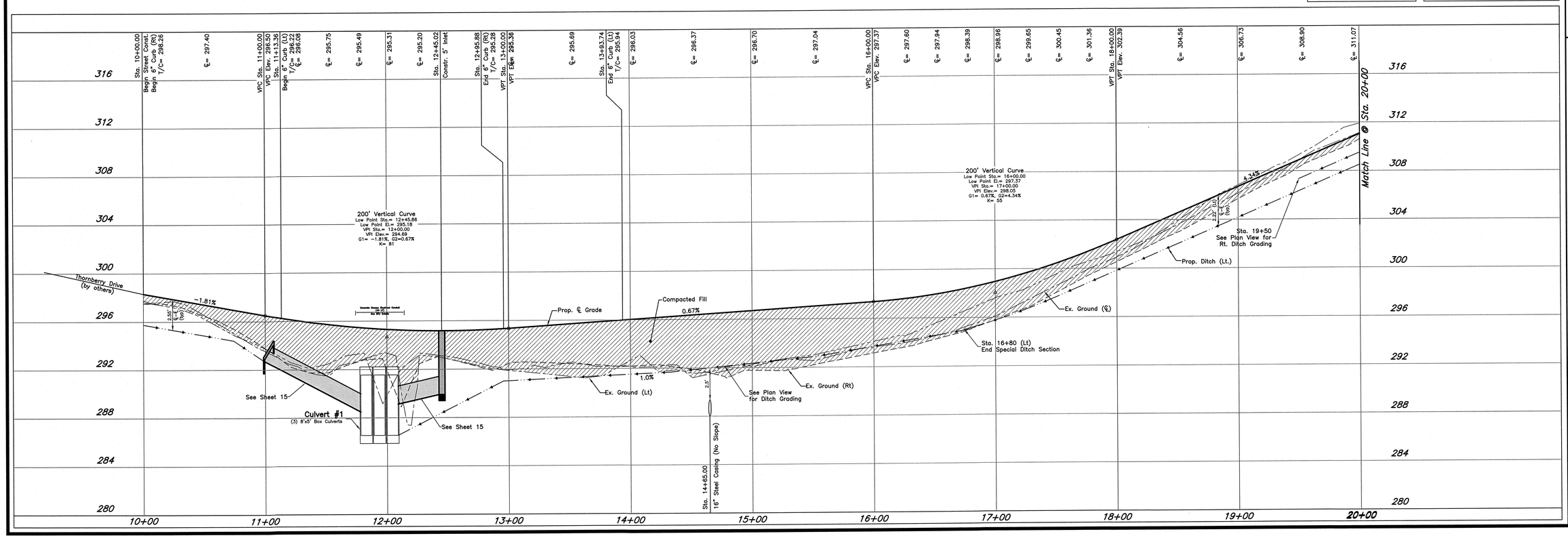

STATE OF TEXAS
JEFFERY L. ROBERTSON
84745
LICENSED PROFESSIONAL ENGINEER
12/19/2010

ISSUED FOR BIDDING AND CONSTRUCTION.

DATE: DEC 2009
DRAWN BY: DRL
DESIGNED BY: SCF
CHECKED BY: JLR
T0010013-003-03.dwg

REVISIONS
1 12/15/09-JLR-Revised per City Comments.

McCLURE & BROWNE ENGINEERING/SURVEYING, INC.
1008 Woodcreek Drive, Suite 103
College Station, Texas 77845
(979) 693-3838
M&B

Sta. 10+00 - 20+00
Plan & Profile
THORNBERRY DRIVE

SHEET NO.
3
OF 19 SHEETS

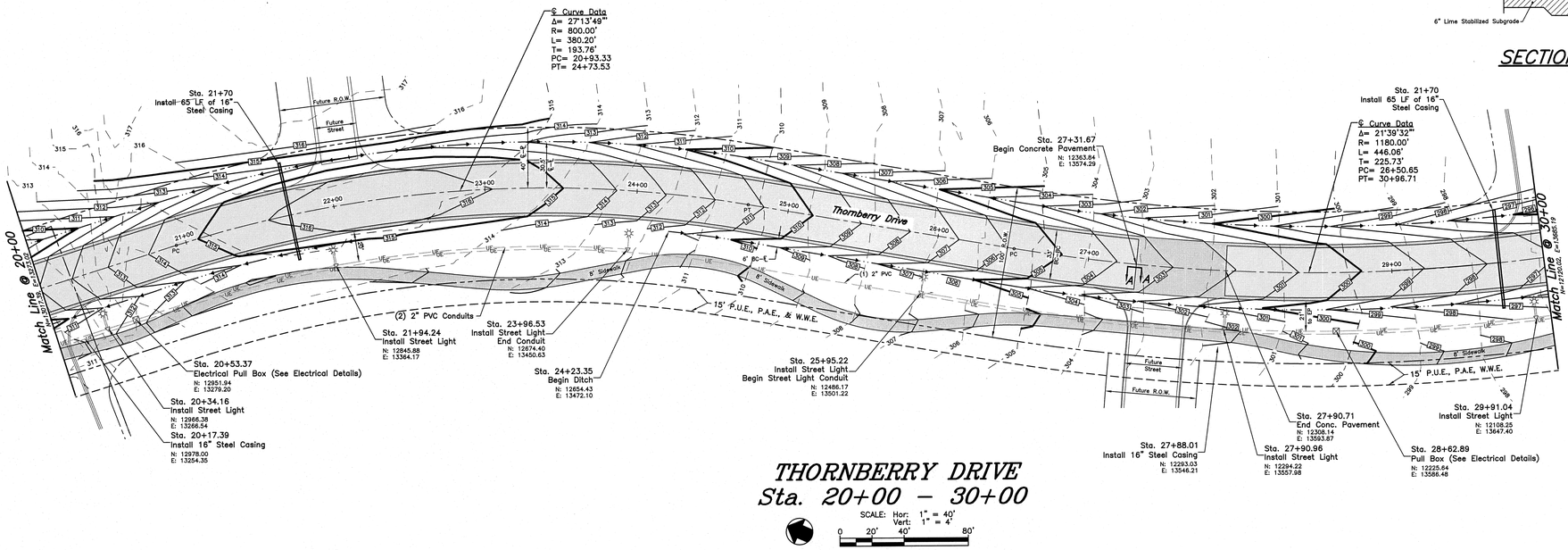

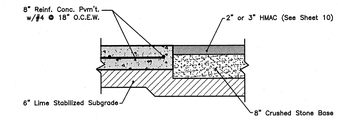

SECTION A–A

THORNBERRY DRIVE
Sta. 20+00 – 30+00

SCALE: Hor: 1" = 40'
Vert: 1" = 4'
0 20' 40' 80'

THESE PLANS DO NOT INCLUDE NECESSARY COMPONENTS FOR CONSTRUCTION SAFETY.

NOTE: LOCATION OF EXISTING BURIED UTILITIES, WHERE SHOWN, IS APPROXIMATE ONLY. THERE MAY EXIST UTILITIES WHICH ARE NOT SHOWN. THE CONTRACTOR SHALL BE RESPONSIBLE FOR LOCATING AND PROTECTING ALL BURIED UTILITIES.

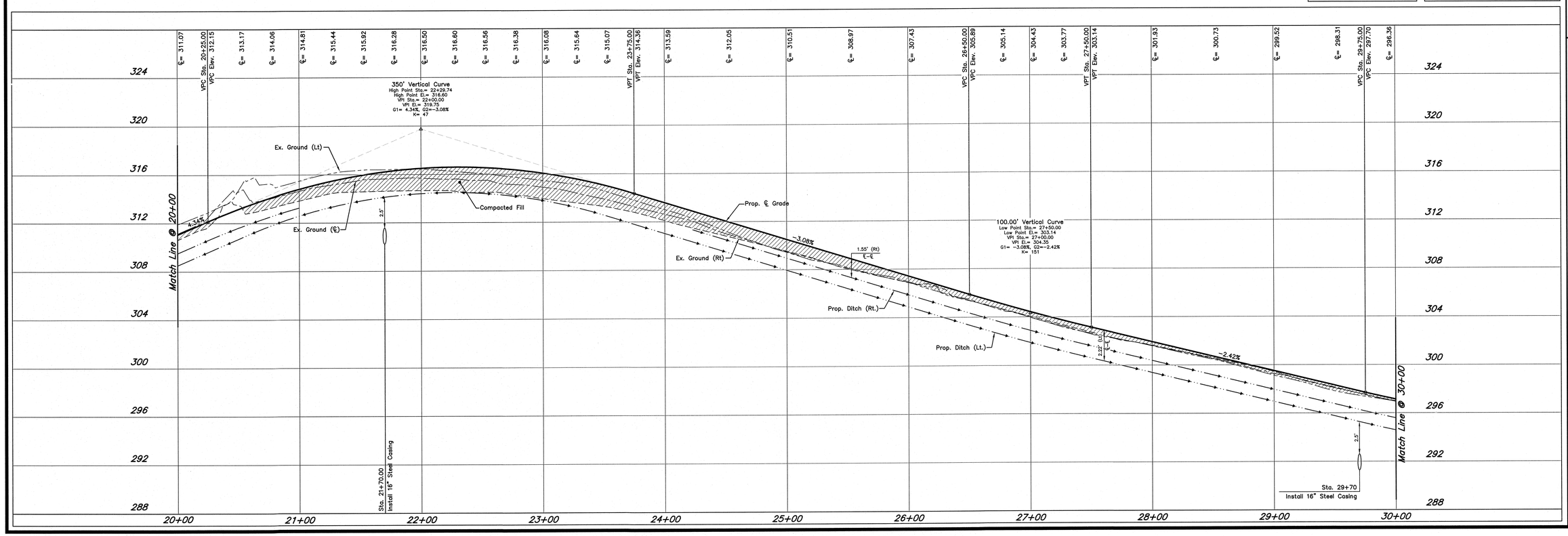

STATE OF TEXAS
JEFFREY L. ROBERTSON
94745
LICENSED PROFESSIONAL ENGINEER

ISSUED FOR BIDDING AND CONSTRUCTION.

DATE: DEC. 2009
DRAWN BY: DRL
DESIGNED BY: SCF
CHECKED BY: JLR

1001013-005-04.dwg

REVISIONS
1 12/16/09–JLR–Revised per City Comments.

McCLURE & BROWNE ENGINEERING/SURVEYING, INC.
1008 Woodcreek Drive, Suite 103
College Station, Texas 77845
(979) 693-3838
M&B

Sta. 20+00 - 30+00
Plan & Profile
THORNBERRY DRIVE

SHEET NO.
4
OF 19 SHEETS

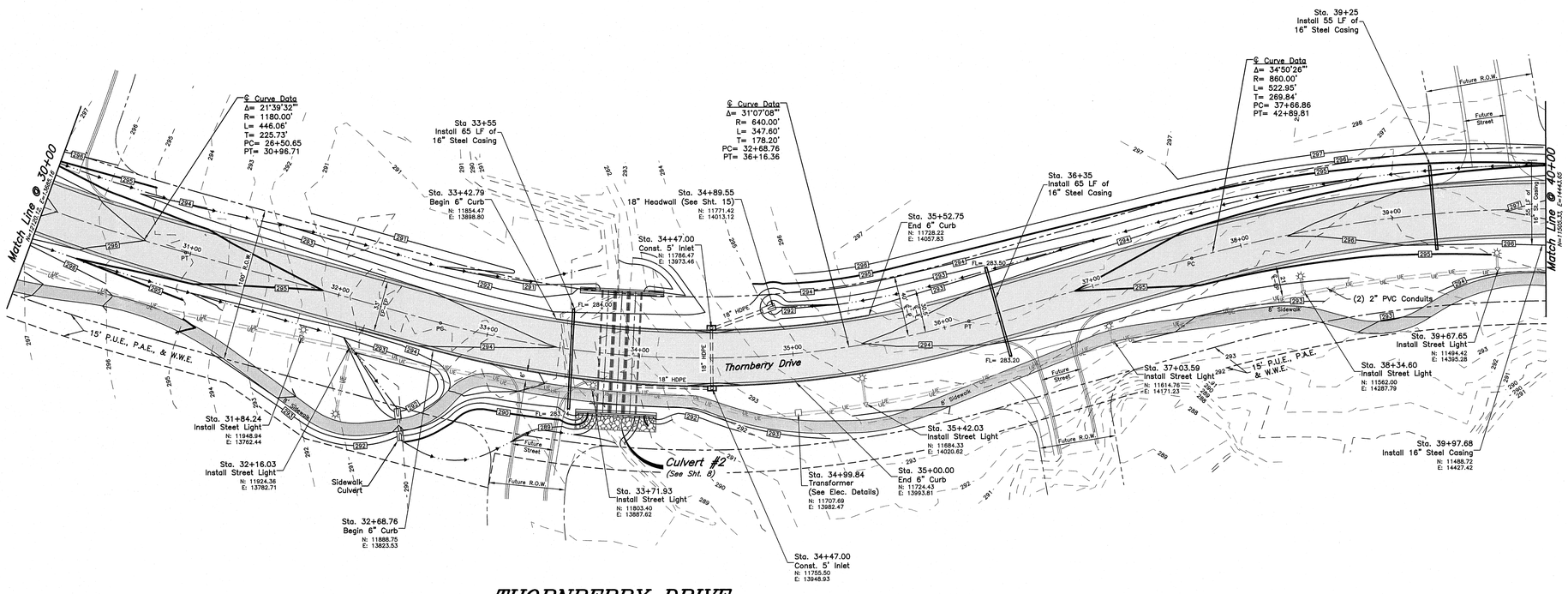

THORNBERRY DRIVE
Sta. 30+00 – 40+00

SCALE: Hor: 1" = 40'
Vert: 1" = 4'

0 20' 40' 80'

THESE PLANS DO NOT INCLUDE NECESSARY COMPONENTS FOR CONSTRUCTION SAFETY.

NOTE: LOCATION OF EXISTING BURIED UTILITIES, WHERE SHOWN, IS APPROXIMATE ONLY. THERE MAY EXIST UTILITIES WHICH ARE NOT SHOWN. THE CONTRACTOR SHALL BE RESPONSIBLE FOR LOCATING AND PROTECTING ALL BURIED UTILITIES.

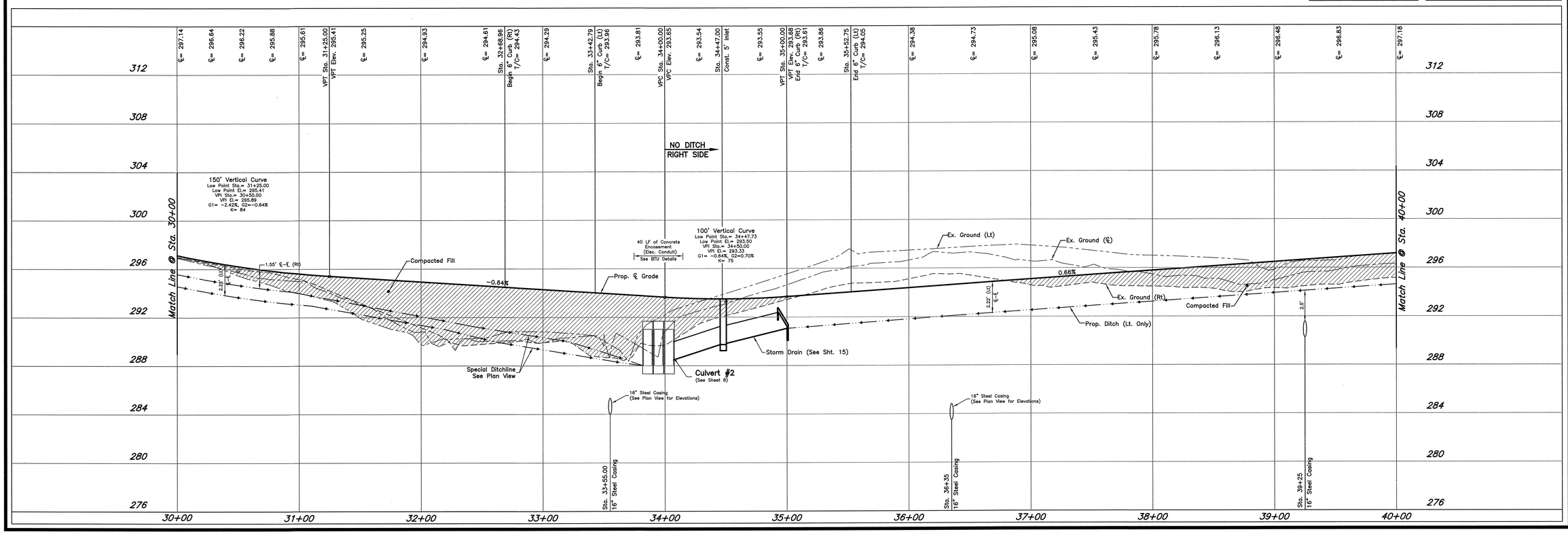

STATE OF TEXAS
JEFFERY L. ROBERTSON
94745
LICENSED PROFESSIONAL ENGINEER

ISSUED FOR BIDDING AND CONSTRUCTION.

DATE: DEC. 2009
DRAWN BY: DRL
DESIGNED BY: SCF
CHECKED BY: JLR
15010013-005-05.dwg

REVISIONS

1	12/16/09–JLR–Revised per City Comments.

McCLURE & BROWNE
ENGINEERING/SURVEYING, INC.
1008 Woodcreek Drive, Suite 103
College Station, Texas 77845
(979) 693-3838

M&B

Sta. 40+00 - 50+00
Plan & Profile
THORNBERRY DRIVE

SHEET NO.
5
OF 19 SHEETS

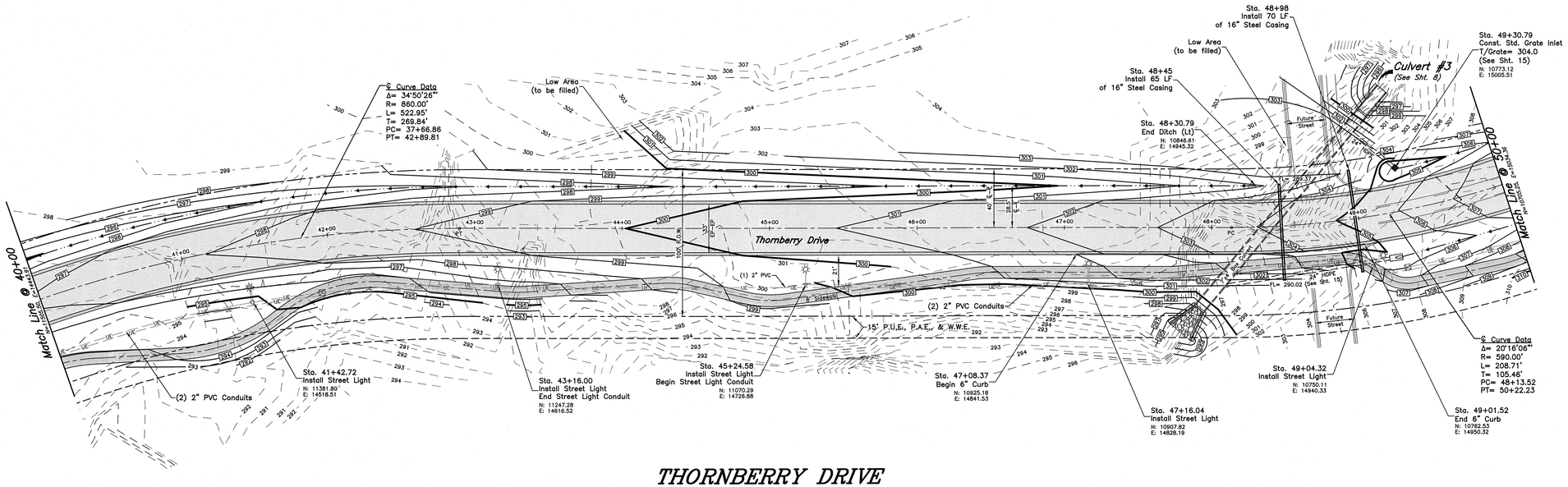

THORNBERRY DRIVE
Sta. 40+00 – 50+00

SCALE: Hor: 1" = 20'
Vert: 1" = 2'
0 10' 20' 40'

THESE PLANS DO NOT INCLUDE NECESSARY COMPONENTS FOR CONSTRUCTION SAFETY.

NOTE: LOCATION OF EXISTING BURIED UTILITIES, WHERE SHOWN, IS APPROXIMATE ONLY. THERE MAY EXIST UTILITIES WHICH ARE NOT SHOWN. THE CONTRACTOR SHALL BE RESPONSIBLE FOR LOCATING AND PROTECTING ALL BURIED UTILITIES.

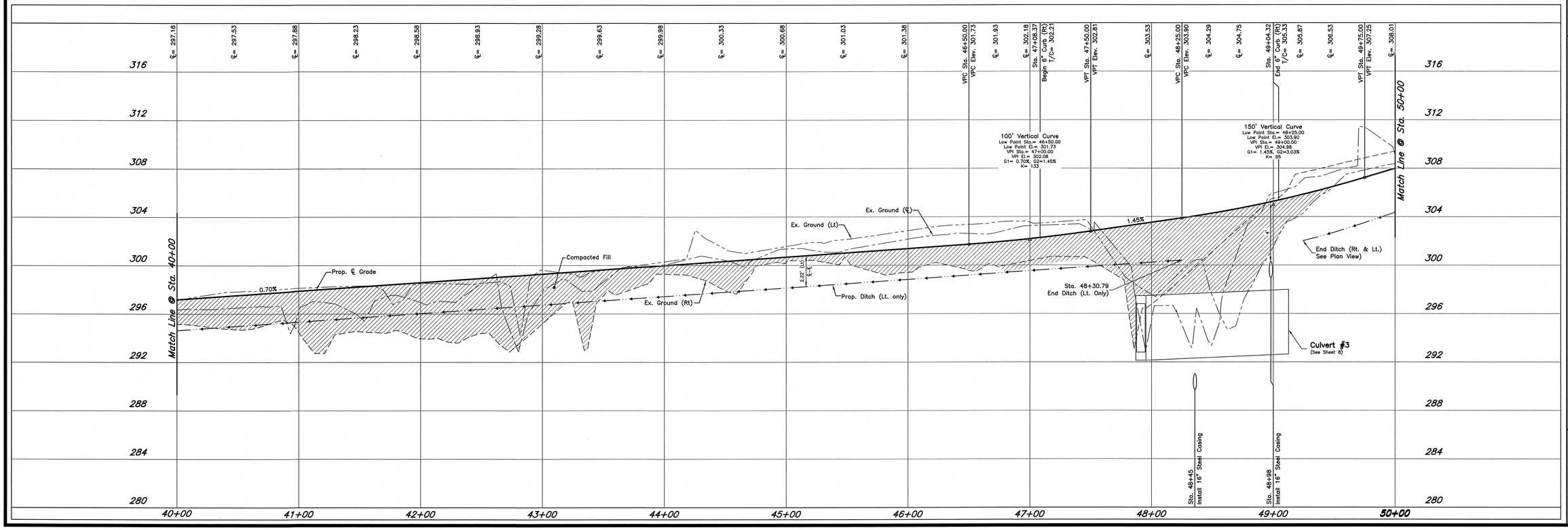

STATE OF TEXAS
JEFFERY L. ROBERTSON
94745
LICENSED
PROFESSIONAL ENGINEER

ISSUED FOR BIDDING AND CONSTRUCTION.

DATE: DEC 2009
DRAWN BY: DRL
DESIGNED BY: SCF
CHECKED BY: JLR
10010013-005-06.dwg

REVISIONS
1 12/16/09-JLR-Revised per City Comments.

McCLURE & BROWNE
ENGINEERING/SURVEYING, INC.
1008 Woodcreek Drive, Suite 103
College Station, Texas 77845
(979) 693-3838

M&B

Sta. 40+00 - 50+00
Plan & Profile
THORNBERRY DRIVE

SHEET NO.
6
OF 19 SHEETS

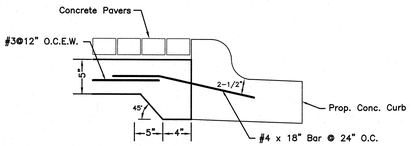

Sidewalk & Curb Connection Detail

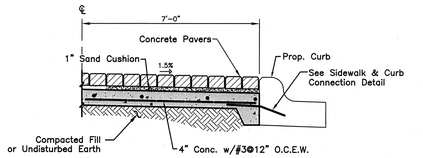

Concrete Paver Detail

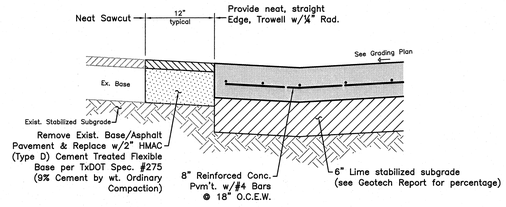

SECTION A–A

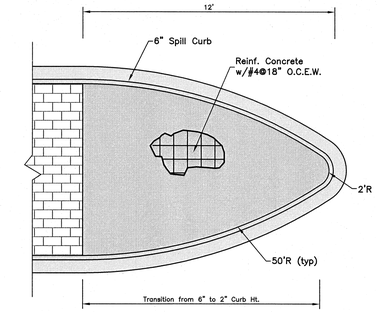

MEDIAN NOSE DETAIL

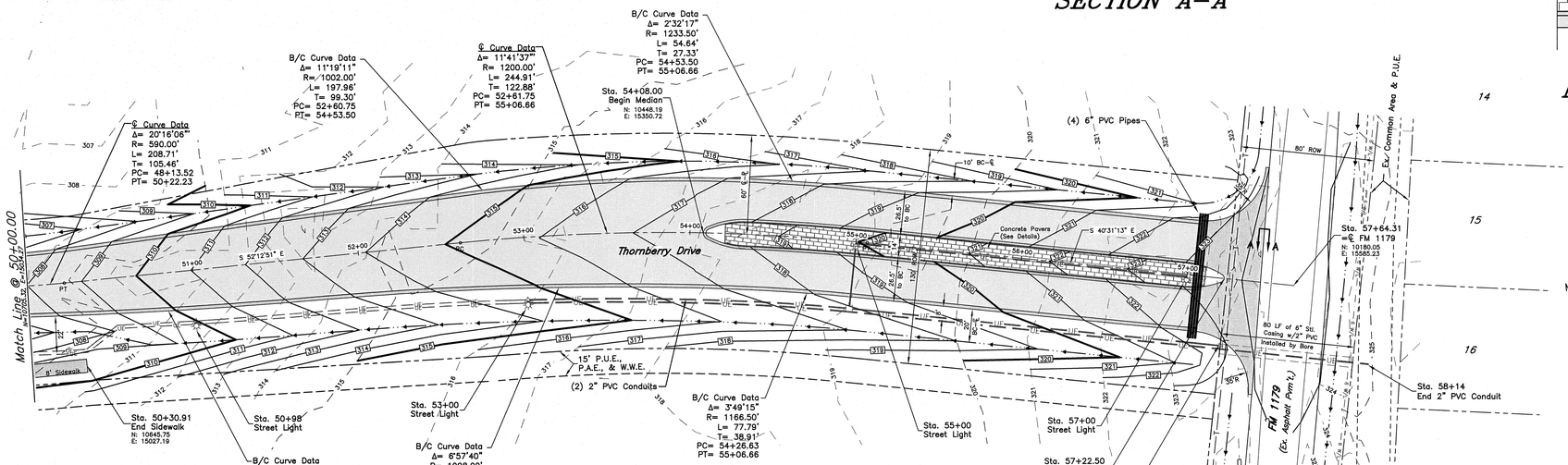

THORNBERRY DRIVE
Sta. 50+00 – FM 1179

SCALE: Hor: 1" = 40'
Vert: 1" = 4'

0 20' 40' 80'

General Note:
All Brick Pavers shall be:
Style: Holland Stone
Dimensions: (7 3/16 x 7 5/8 x 2 3/8)
Color: River Red
Manuf: Pavestone or approved equal

THESE PLANS DO NOT INCLUDE NECESSARY COMPONENTS FOR CONSTRUCTION SAFETY.

NOTE: LOCATION OF EXISTING BURIED UTILITIES, WHERE SHOWN, IS APPROXIMATE ONLY. THERE MAY EXIST UTILITIES WHICH ARE NOT SHOWN. THE CONTRACTOR SHALL BE RESPONSIBLE FOR LOCATING AND PROTECTING ALL BURIED UTILITIES.

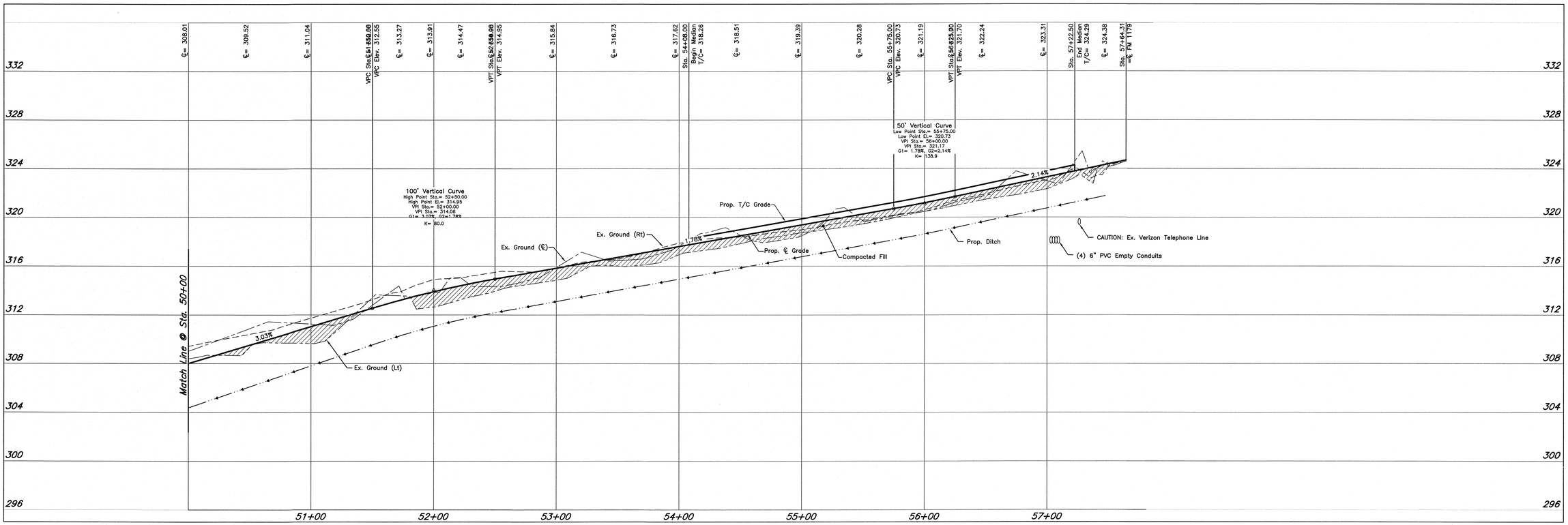

STATE OF TEXAS
JEFFERY L. ROBERTSON
94745
LICENSED PROFESSIONAL ENGINEER

ISSUED FOR BIDDING AND CONSTRUCTION.

DATE: DEC. 2009
DRAWN BY: DRL
DESIGNED BY: SCF
CHECKED BY: JLR
10010013-005-07.dwg

REVISIONS

McCLURE & BROWNE ENGINEERING/SURVEYING, INC.
1008 Woodcreek Drive, Suite 103
College Station, Texas 77845
(979) 693-3838

M&B

Sta. 50+00 - FM 1179
Plan & Profile
THORNBERRY DRIVE

SHEET NO.
7
OF 19 SHEETS

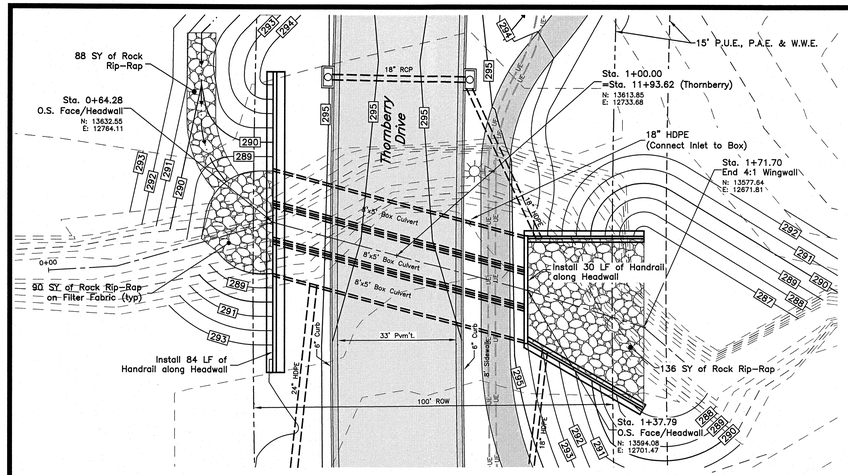

CULVERT #1

SCALE: Hor: 1" = 20'
Vert: 1" = 2'

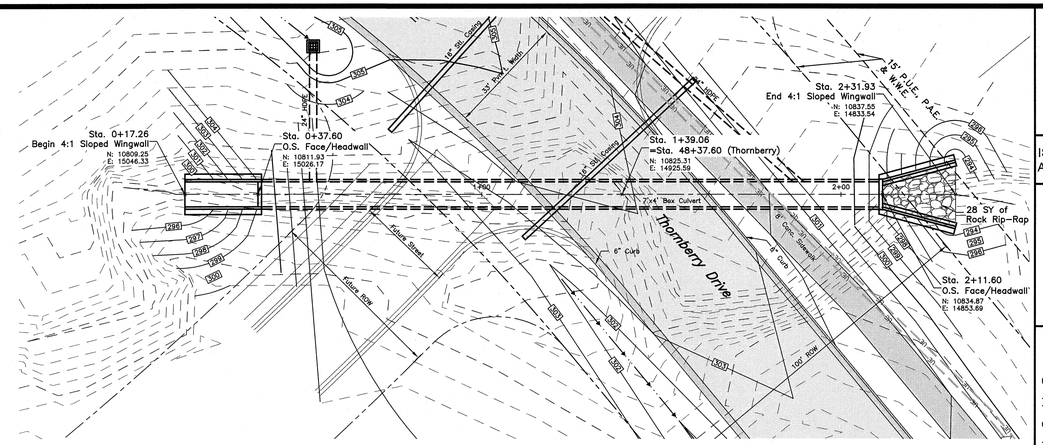

CULVERT #2

SCALE: Hor: 1" = 20'
Vert: 1" = 2'

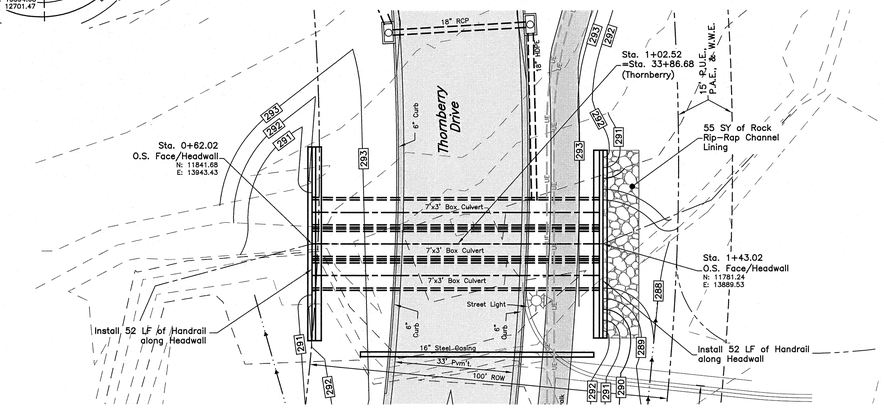

CULVERT #3

SCALE: Hor: 1" = 20'
Vert: 1" = 2'

THESE PLANS DO NOT INCLUDE NECESSARY COMPONENTS FOR CONSTRUCTION SAFETY.

NOTE: LOCATION OF EXISTING BURIED UTILITIES, WHERE SHOWN, IS APPROXIMATE ONLY. THERE MAY EXIST UTILITIES WHICH ARE NOT SHOWN. THE CONTRACTOR SHALL BE RESPONSIBLE FOR LOCATING AND PROTECTING ALL BURIED UTILITIES.

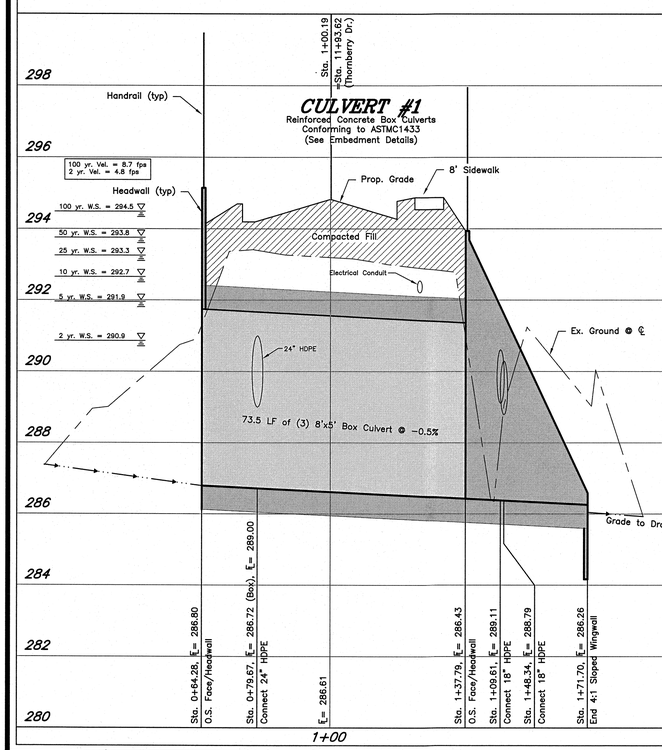

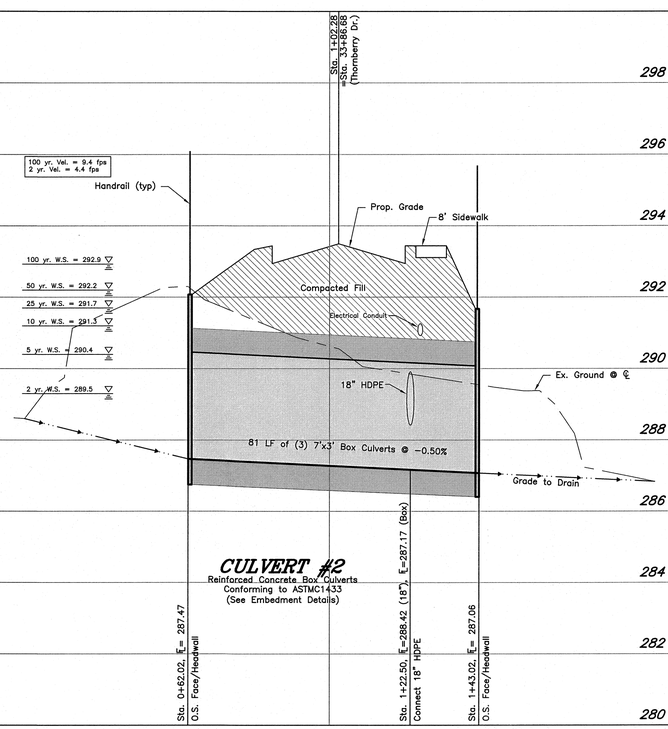

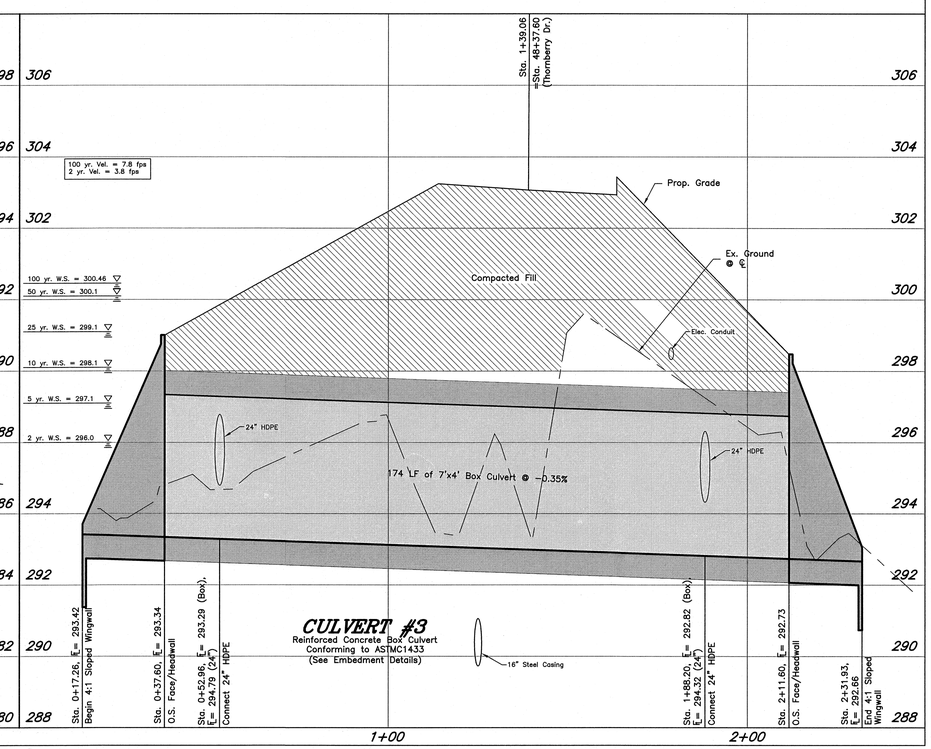

STATE OF TEXAS
JEFFERY L. ROBERTSON
94745
LICENSED PROFESSIONAL ENGINEER
7/19/2010

ISSUED FOR BIDDING AND CONSTRUCTION.

DATE: DEC. 2009
DRWN BY: DRL
DESIGNED BY: SCF
CHECKED BY: JLR
10010013-005-08.dwg

REVISIONS

1	12/16/09-JLR-Revised per City Comments.

McCLURE & BROWNE ENGINEERING/SURVEYING, INC.
1008 Woodcreek Drive, Suite 103
College Station, Texas 77845
(979) 693-3838
M&B

Culvert Plan & Profile

THORNBERRY DRIVE

SHEET NO.
8
OF 19 SHEETS

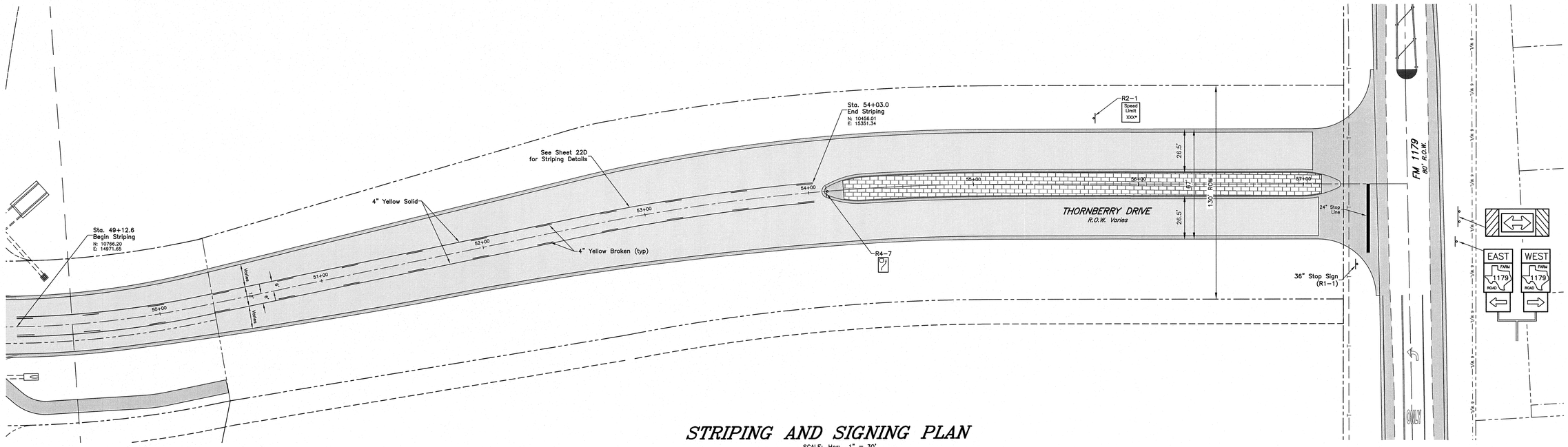

STRIPING AND SIGNING PLAN

SCALE: Hor: 1" = 30'

0 15' 30' 60'

STATE OF TEXAS
JEFFERY L. ROBERTSON
94745
LICENSED
PROFESSIONAL ENGINEER

ISSUED FOR BIDDING AND CONSTRUCTION.

DATE: DEC 2009
DRAWN BY: DRL
DESIGNED BY: SCF
CHECKED BY: JLR
TS01013-005-09.dwg

REVISIONS

McCLURE & BROWNE
ENGINEERING/SURVEYING, INC.
1008 Woodcreek Drive, Suite 103
College Station, Texas 77845
(979) 693-3838

Thornberry Striping & Signing

THORNBERRY DRIVE

SHEET NO.
9
OF 19 SHEETS

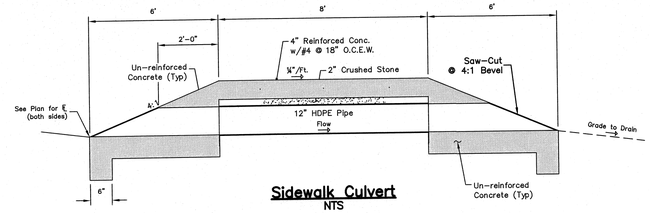

Sidewalk Culvert
NTS

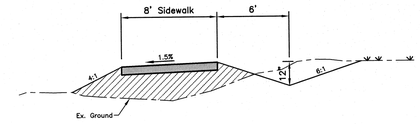

SECTION A–A

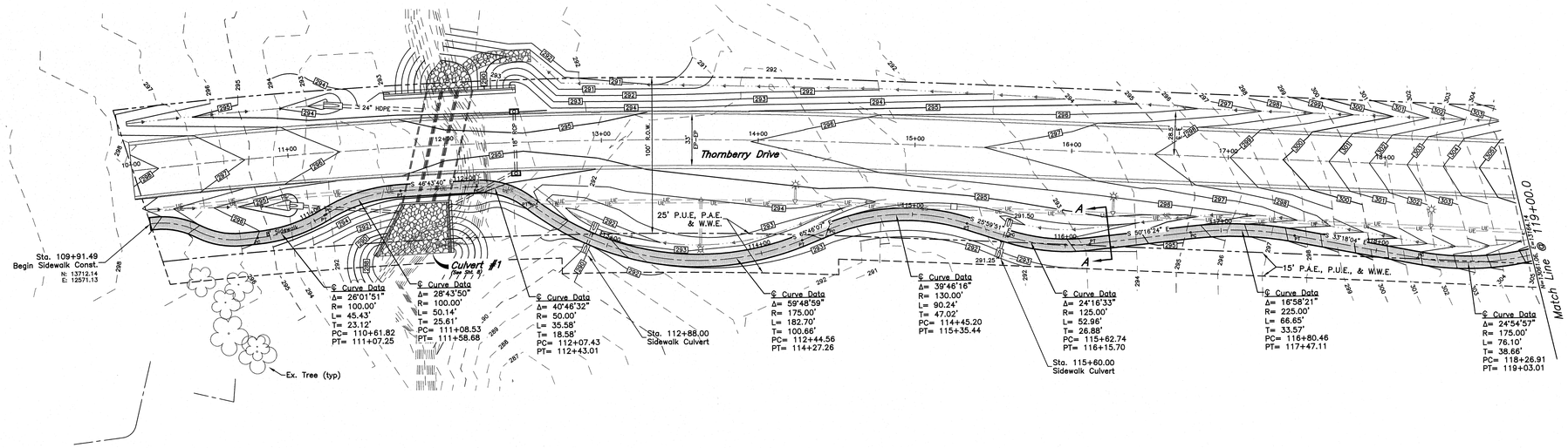

SIDEWALK PLAN

SCALE: Hor: 1" = 40'
Vert: 1" = 4'

0 20' 40' 80'

THESE PLANS DO NOT INCLUDE NECESSARY COMPONENTS FOR CONSTRUCTION SAFETY.

NOTE: LOCATION OF EXISTING BURIED UTILITIES, WHERE SHOWN, IS APPROXIMATE ONLY. THERE MAY EXIST UTILITIES WHICH ARE NOT SHOWN. THE CONTRACTOR SHALL BE RESPONSIBLE FOR LOCATING AND PROTECTING ALL BURIED UTILITIES.

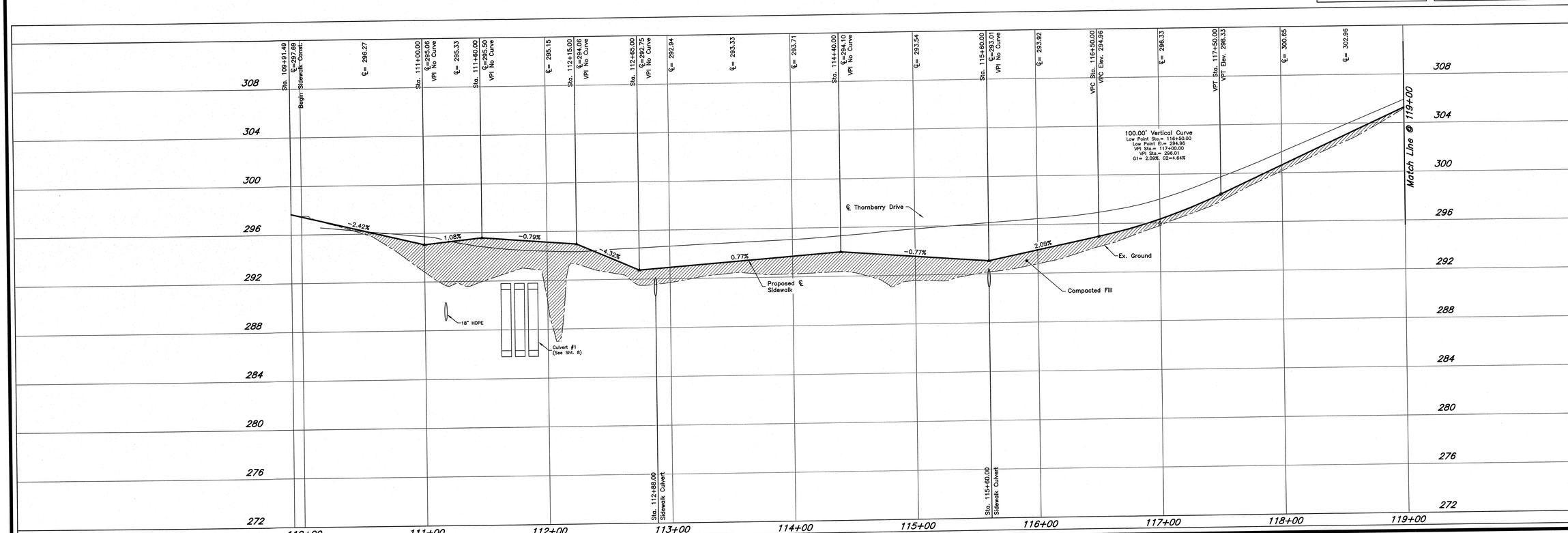

STATE OF TEXAS
12/16/2009
JEFFERY L. ROBERTSON
94745
LICENSED PROFESSIONAL ENGINEER

ISSUED FOR BIDDING AND CONSTRUCTION.

DATE: DEC 2009
DRAWN BY: DRL
DESIGNED BY: SCF
CHECKED BY: JLR
10010013-005-110.dwg

REVISIONS
1 12/16/09–JLR–Revised per City Comments.

McCLURE & BROWNE ENGINEERING/SURVEYING, INC.
1008 Woodcreek Drive, Suite 103
College Station, Texas 77845
(979) 693-3838

M&B

Sidewalk Plan and Profile
THORNBERRY DRIVE

SHEET NO.
10
OF 19 SHEETS

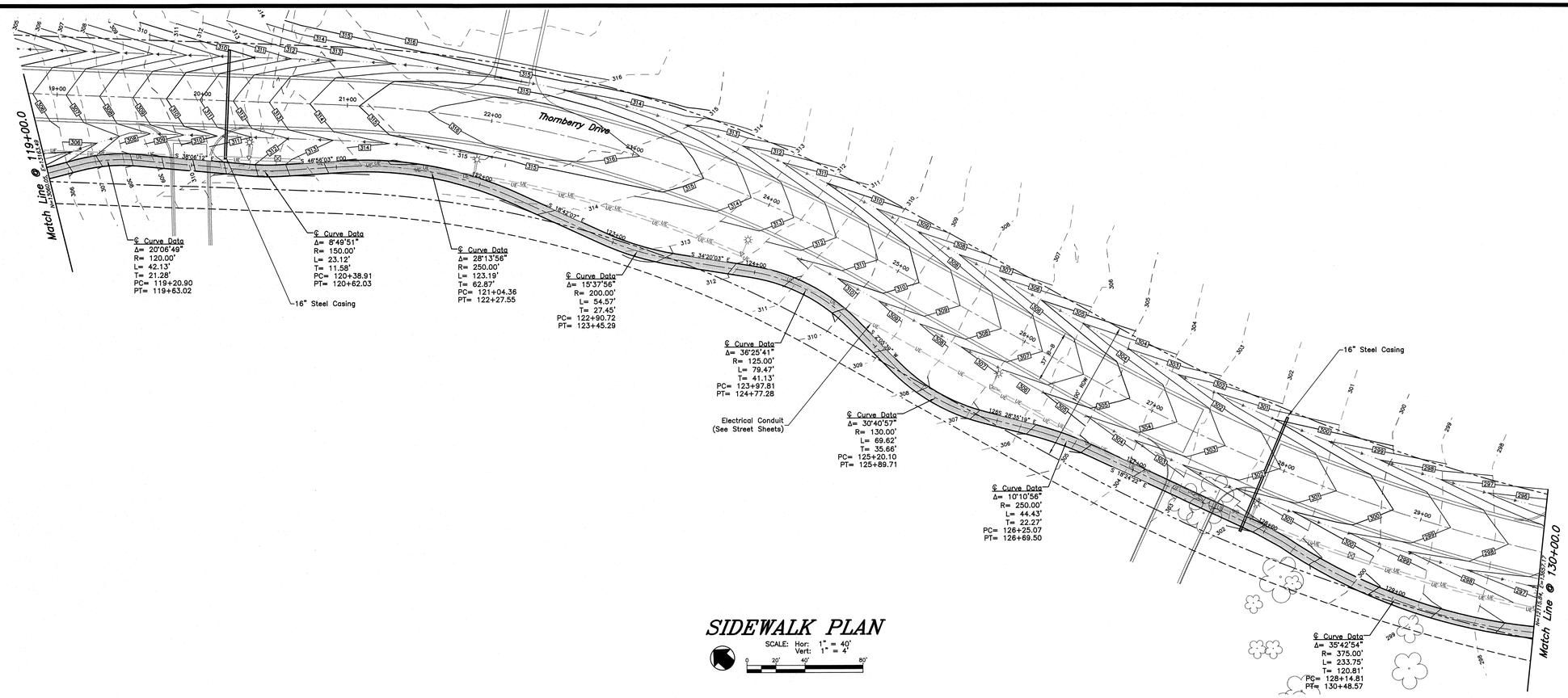

SIDEWALK PLAN

SCALE: Hor: 1" = 40'
Vert: 1" = 4'

0 20' 40' 80'

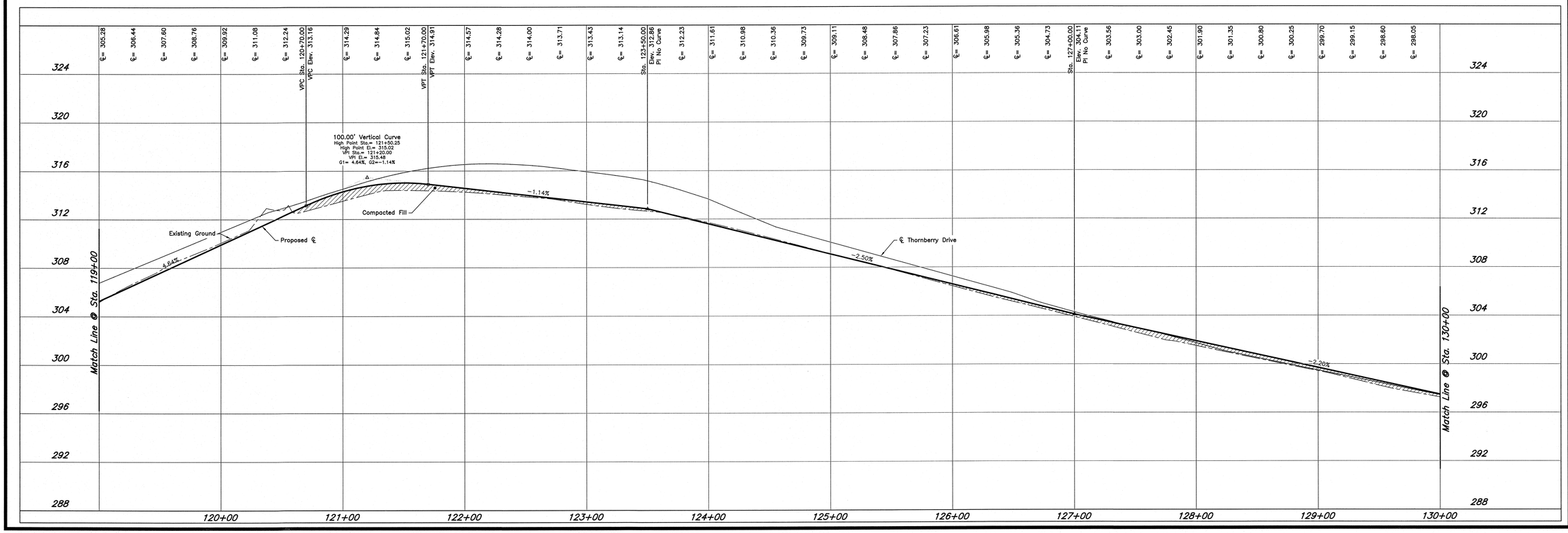

STATE OF TEXAS
JEFFERY L. ROBERTSON
94745
LICENSED
PROFESSIONAL ENGINEER

ISSUED FOR BIDDING AND CONSTRUCTION.

DATE: DEC 2009
DRAWN BY: DRL
DESIGNED BY: SCF
CHECKED BY: JLR
1001013-005-11.dwg

REVISIONS

McCLURE & BROWNE ENGINEERING/SURVEYING, INC.
1008 Woodcreek Drive, Suite 103
College Station, Texas 77845
(979) 693-3838

M&B

Sidewalk Plan and Profile

THORNBERRY DRIVE

SHEET NO.
11
OF 19 SHEETS

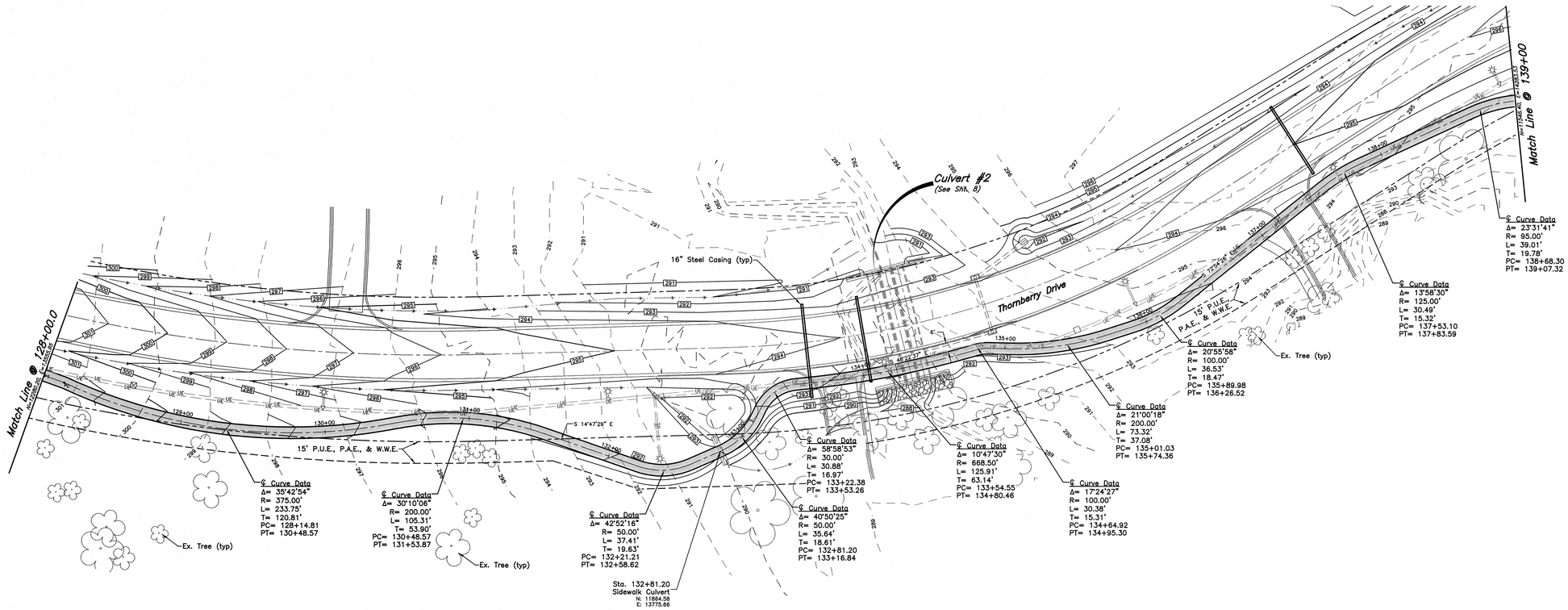

SIDEWALK PLAN

SCALE: Hor: 1" = 40'
Vert: 1" = 4'

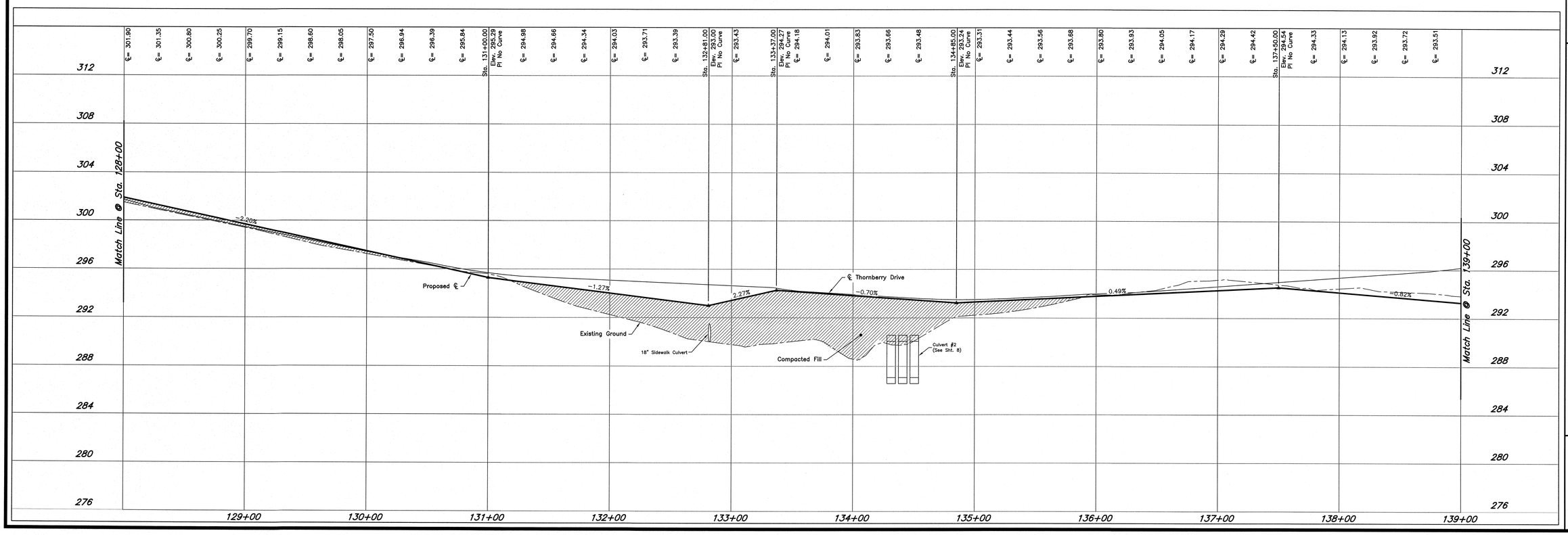

STATE OF TEXAS
JEFFERY L. ROBERTSON
94745
LICENSED PROFESSIONAL ENGINEER

ISSUED FOR BIDDING AND CONSTRUCTION.

DATE: DEC 2009
DRAWN BY: DRL
DESIGNED BY: SCF
CHECKED BY: JLR
10010013-005-12.dwg

REVISIONS

1	12/16/09–JLR–Revised per City Comments.

McCLURE & BROWNE ENGINEERING/SURVEYING, INC.
1008 Woodcreek Drive, Suite 103
College Station, Texas 77845
(979) 693-3838

Sidewalk Plan and Profile

THORNBERRY DRIVE

SHEET NO.
12
OF 19 SHEETS

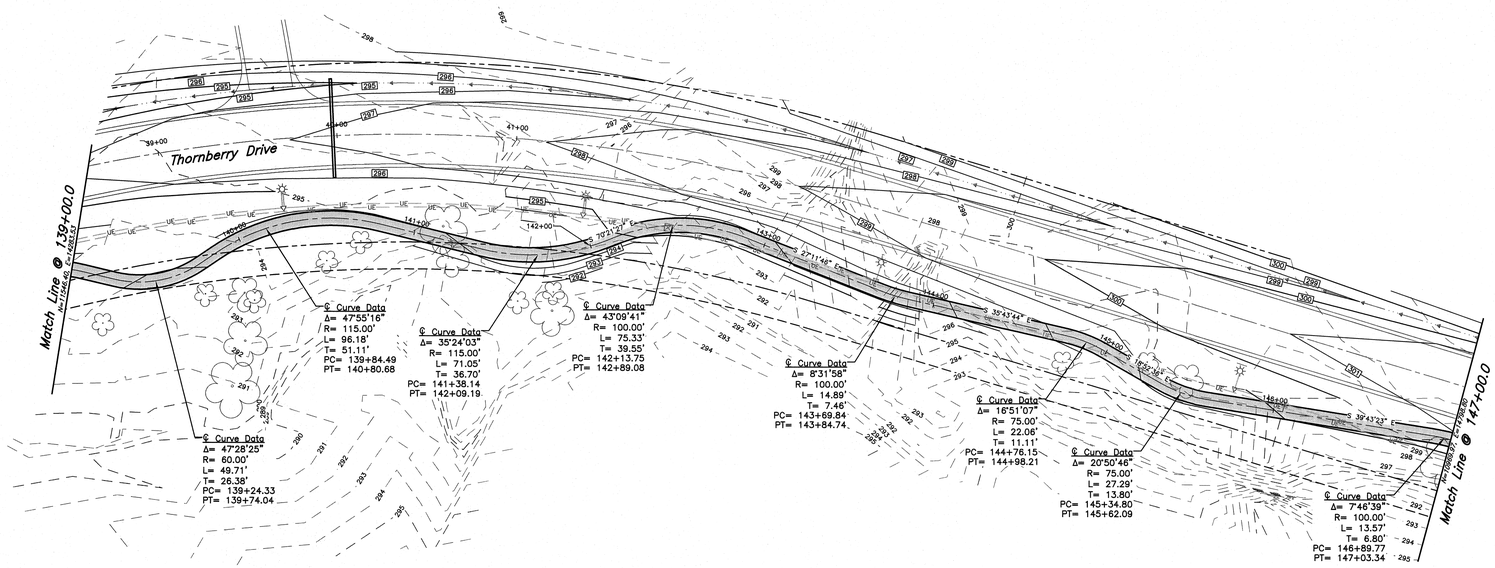

SIDEWALK PLAN

SCALE: Hor: 1" = 40'
Vert: 1" = 4'

0 20' 40' 80'

THESE PLANS DO NOT INCLUDE NECESSARY COMPONENTS FOR CONSTRUCTION SAFETY.

NOTE: LOCATION OF EXISTING BURIED UTILITIES, WHERE SHOWN, IS APPROXIMATE ONLY. THERE MAY EXIST UTILITIES WHICH ARE NOT SHOWN. THE CONTRACTOR SHALL BE RESPONSIBLE FOR LOCATING AND PROTECTING ALL BURIED UTILITIES.

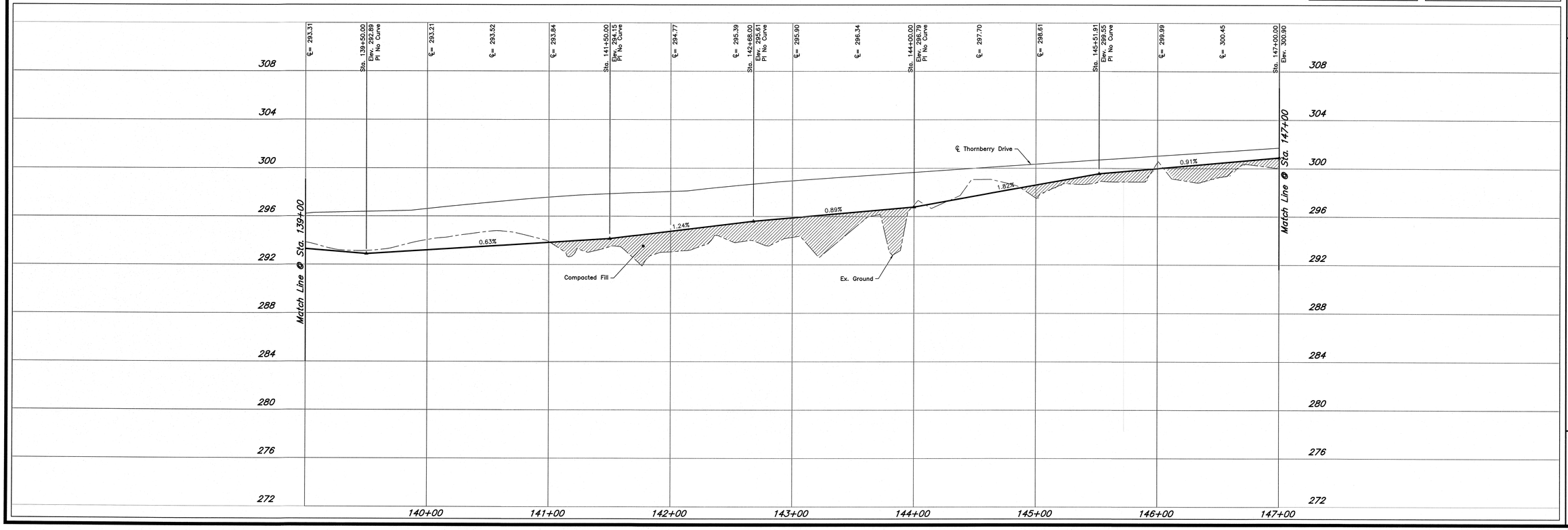

STATE OF TEXAS
JEFFERY L. ROBERTSON
94745
LICENSED PROFESSIONAL ENGINEER

ISSUED FOR BIDDING AND CONSTRUCTION.

DATE: DEC 2009
DRAWN BY: DRL
DESIGNED BY: SCF
CHECKED BY: JLR
10010013-005-13.dwg

REVISIONS

McCLURE & BROWNE ENGINEERING/SURVEYING, INC.
1008 Woodcreek Drive, Suite 103
College Station, Texas 77845
(979) 693-3838
M&B

Sidewalk Plan and Profile

THORNBERRY DRIVE

SHEET NO.
13
OF 19 SHEETS

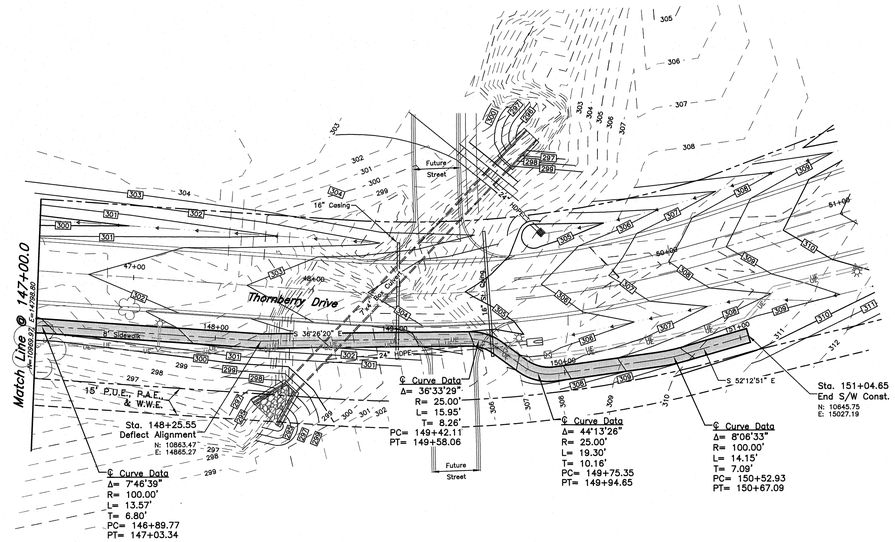

SIDEWALK PLAN

SCALE: Hor: 1" = 40'
Vert: 1" = 4'

0 20' 40' 80'

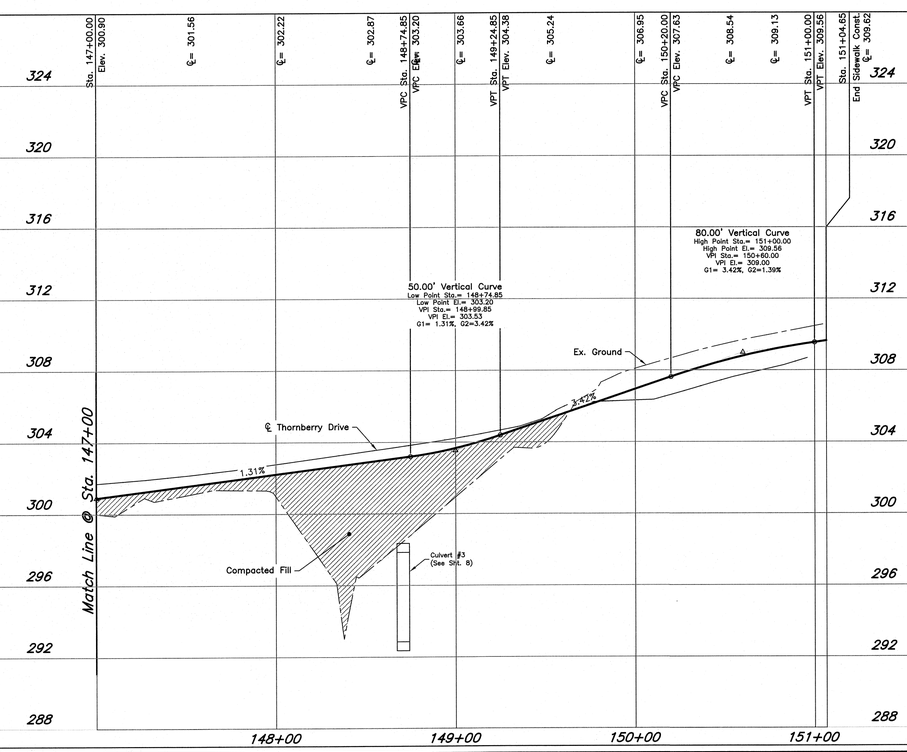

STATE OF TEXAS
JEFFERY L. ROBERTSON
94745
LICENSED
PROFESSIONAL ENGINEER

ISSUED FOR BIDDING AND CONSTRUCTION.

DATE: DEC. 2009
DRAWN BY: DRL
DESIGNED BY: SCF
CHECKED BY: JLR

1001/0013-005-14.dwg

REVISIONS

McCLURE & BROWNE
ENGINEERING/SURVEYING, INC.
1008 Woodcreek Drive, Suite 103
College Station, Texas 77845
(979) 693-3838
M&B

Sidewalk Plan and Profile

THORNBERRY DRIVE

SHEET NO.

14

OF 19 SHEETS

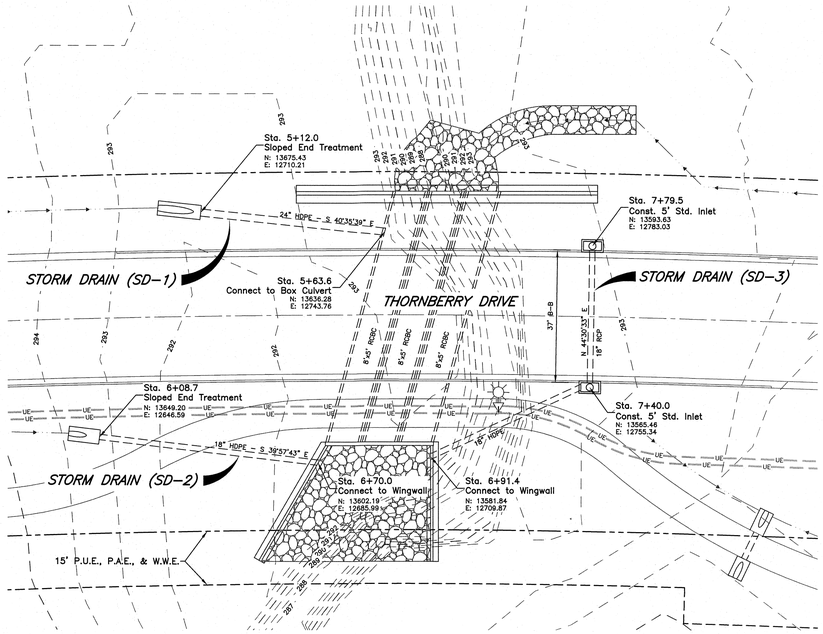

STORM DRAIN (SD-1, SD-2, AND SD-3)

SCALE: Hor: 1" = 20'
Vert: 1" = 2'

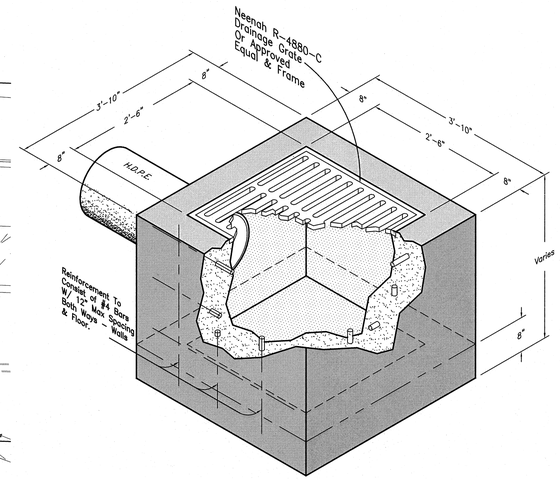

STANDARD GRATE INLET

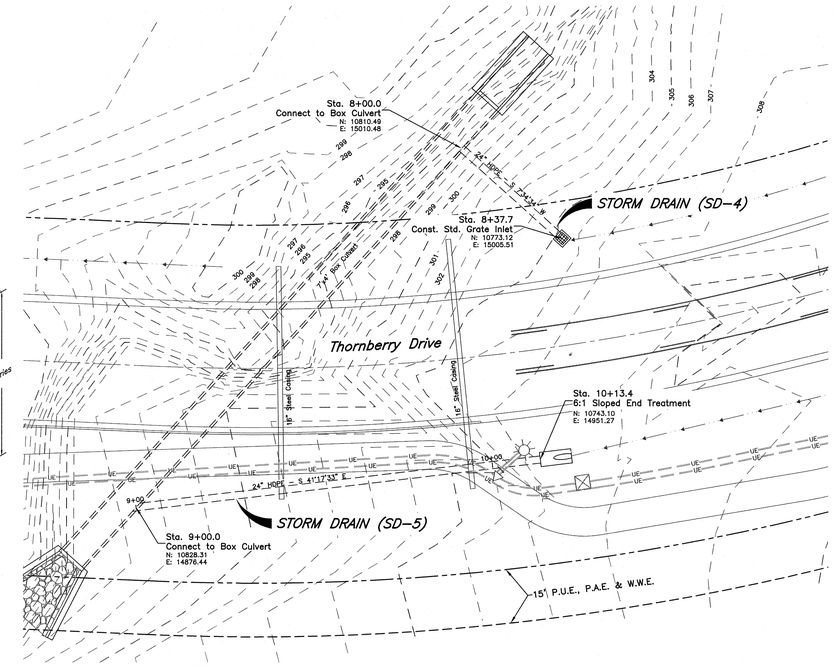

STORM DRAIN (SD-4 AND SD-5)

SCALE: Hor: 1" = 20'
Vert: 1" = 2'

THESE PLANS DO NOT INCLUDE NECESSARY COMPONENTS FOR CONSTRUCTION SAFETY.

NOTE: LOCATION OF EXISTING BURIED UTILITIES, WHERE SHOWN, IS APPROXIMATE ONLY. THERE MAY EXIST UTILITIES WHICH ARE NOT SHOWN. THE CONTRACTOR SHALL BE RESPONSIBLE FOR LOCATING AND PROTECTING ALL BURIED UTILITIES.

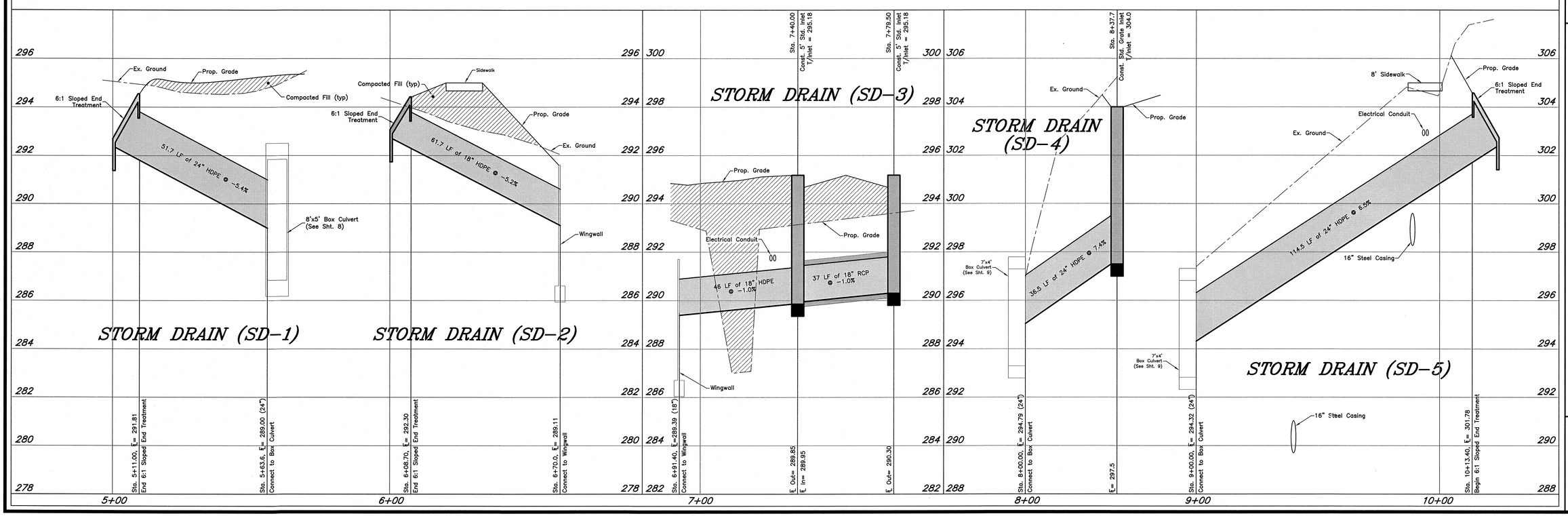

STATE OF TEXAS
JEFFERY L. ROBERTSON
94745
LICENSED PROFESSIONAL ENGINEER

ISSUED FOR BIDDING AND CONSTRUCTION.

DATE: DEC 2009
DRAWN BY: DRL
DESIGNED BY: SCF
CHECKED BY: JLR
10010013-005-15.dwg

REVISIONS
1 12/16/09—JLR—Revised per City Comments.

McCLURE & BROWNE ENGINEERING/SURVEYING, INC.
1008 Woodcreek Drive, Suite 103
College Station, Texas 77845
(979) 693-3838

M&B

STORM DRAIN PLAN AND PROFILE THORNBERRY DRIVE

SHEET NO.
15
OF 19 SHEETS

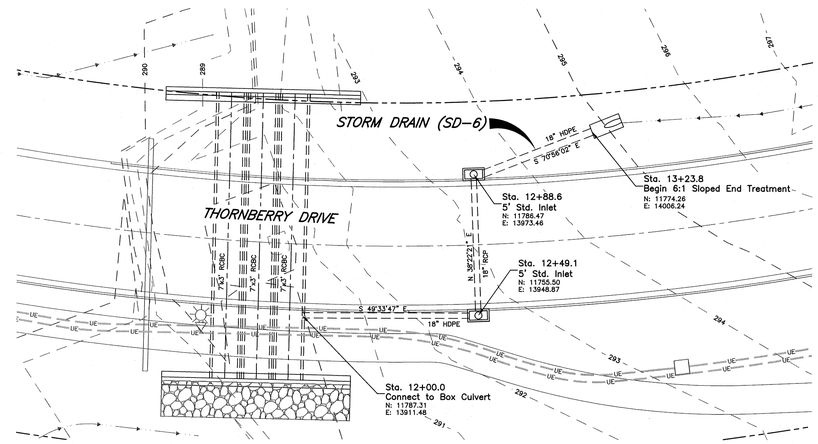

STORM DRAIN (SD-6)

SCALE: Hor: 1" = 20'
Vert: 1" = 2'

0 10' 20' 40'

THESE PLANS DO NOT INCLUDE NECESSARY COMPONENTS FOR CONSTRUCTION SAFETY.

NOTE: LOCATION OF EXISTING BURIED UTILITIES, WHERE SHOWN, IS APPROXIMATE ONLY. THERE MAY EXIST UTILITIES WHICH ARE NOT SHOWN. THE CONTRACTOR SHALL BE RESPONSIBLE FOR LOCATING AND PROTECTING ALL BURIED UTILITIES.

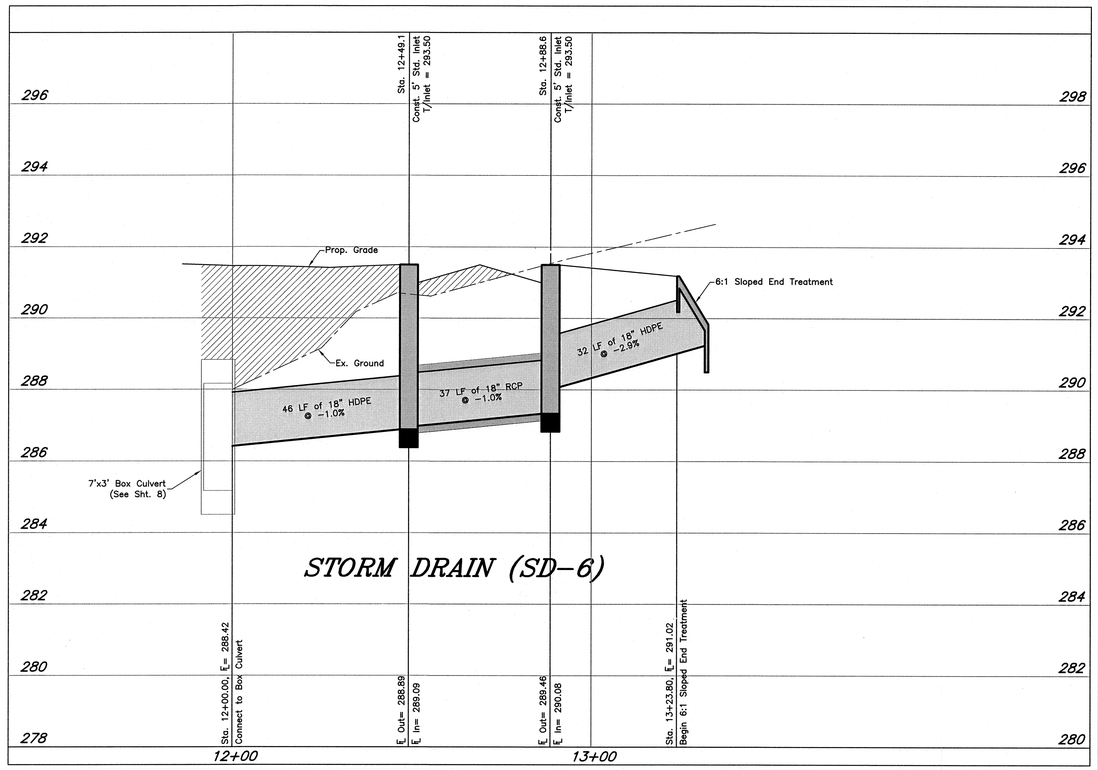

STATE OF TEXAS
JEFFERY L. ROBERTSON
94745
LICENSED
PROFESSIONAL ENGINEER
11-19-2010

ISSUED FOR BIDDING AND CONSTRUCTION.

DATE: DEC. 2009
DRAWN BY: DRL
DESIGNED BY: SCF
CHECKED BY: JLR

10010013-005-16.dwg

REVISIONS

1	12/16/09-JLR-Revised per City Comments.

McCLURE & BROWNE
ENGINEERING/SURVEYING, INC.
1008 Woodcreek Drive, Suite 103
College Station, Texas 77845
(979) 693-3838

M&B

STORM DRAIN (SD-6)
PLAN AND PROFILE
THORNBERRY DRIVE

SHEET NO.
16
OF 19 SHEETS

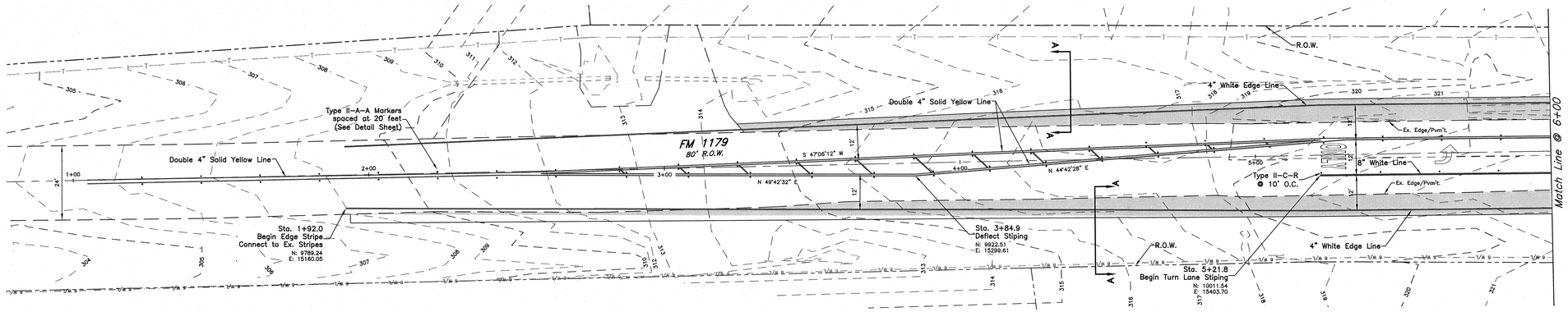

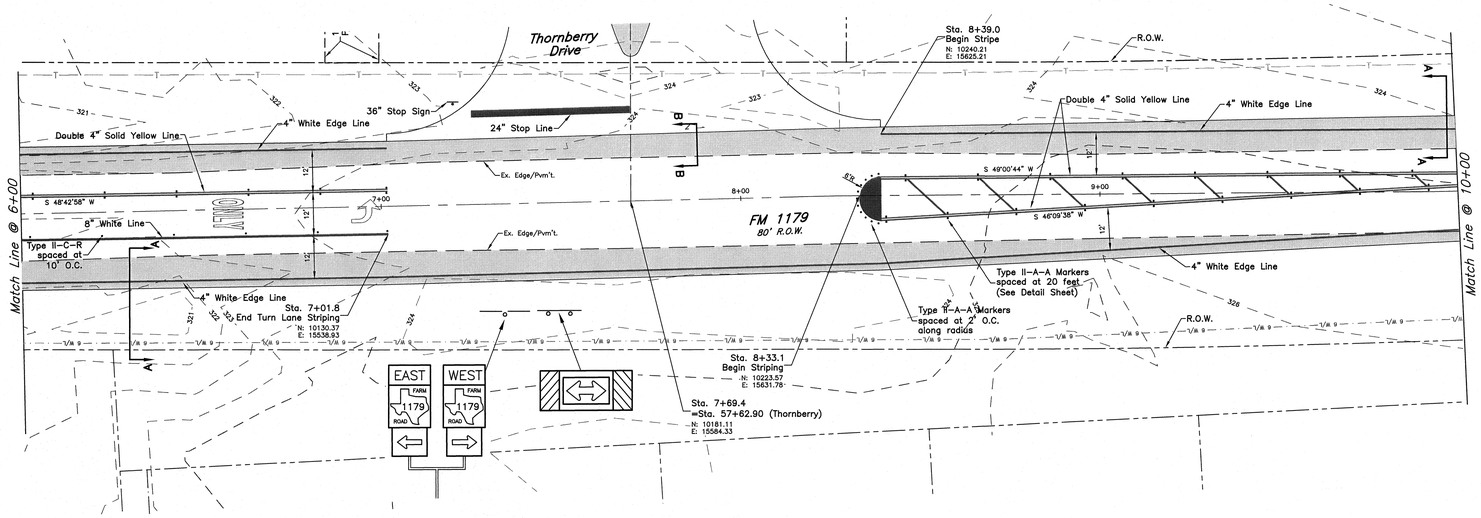

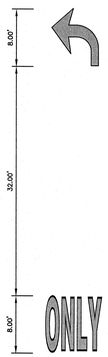

Left Turn Marking Layout

SCALE: Hor: 1" = 10'

0 5' 10' 20'

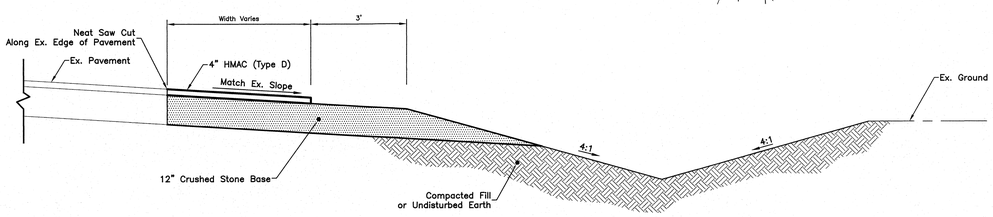

SECTION A–A

SCALE: 1" = 6'

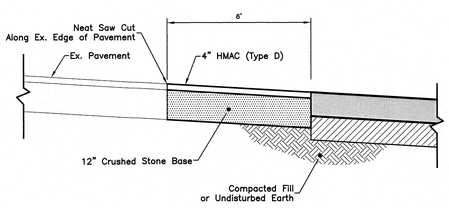

SECTION B–B

SCALE: 1" = 6'

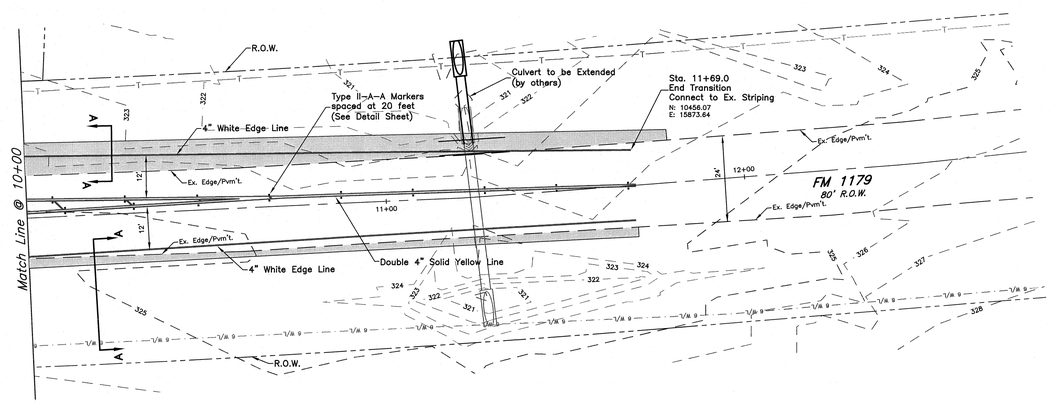

GENERAL NOTES:
1. ALL PAVEMENT MARKINGS SHALL COMPLY WITH TxDOT SPECIFICATION NO. 666.
2. ALL PRE-FABRICATED PAVEMENT MARKINGS SHALL COMPLY WITH TxDOT SPECIFICATION NO. 668.

STATE OF TEXAS
JEFFERY L. ROBERTSON
94745
LICENSED PROFESSIONAL ENGINEER

ISSUED FOR BIDDING AND CONSTRUCTION.

DATE: DEC 2009
DRAWN BY: DRL
DESIGNED BY: SCF
CHECKED BY: JLR
10010015-005-17.dwg

REVISIONS

McCLURE & BROWNE ENGINEERING/SURVEYING, INC.
1008 Woodcreek Drive, Suite 103
College Station, Texas 77845
(979) 693-3838
M&B

FM 1179 Improvements

THORNBERRY DRIVE

SHEET NO.
17
OF 19 SHEETS

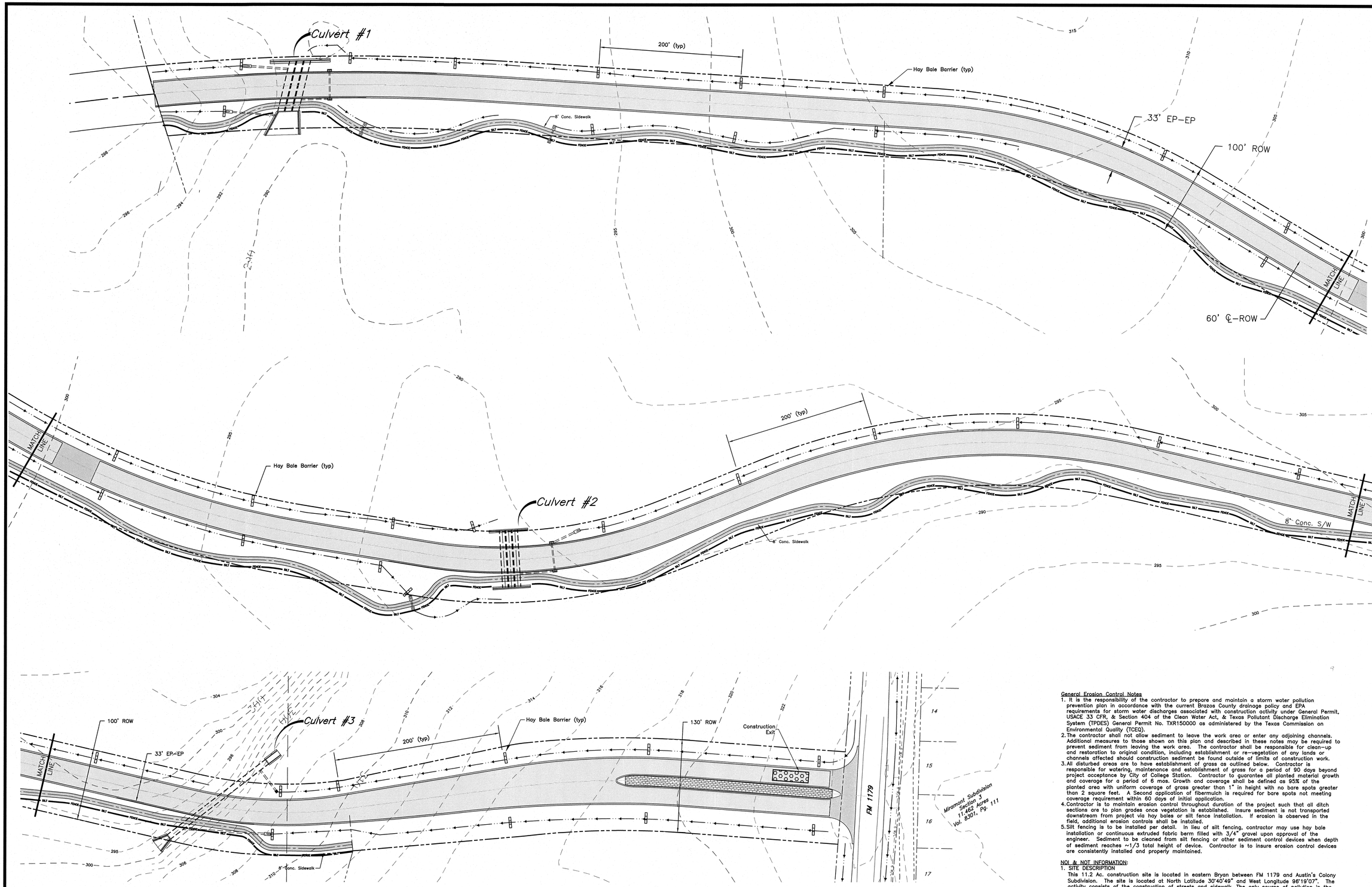

General Erosion Control Notes

1. It is the responsibility of the contractor to prepare and maintain a storm water pollution prevention plan in accordance with the current Brazos County drainage policy and EPA requirements for storm water discharges associated with construction activity under General Permit, USACE 33 CFR, & Section 404 of the Clean Water Act, & Texas Pollutant Discharge Elimination System (TPDES) General Permit No. TXR150000 as administered by the Texas Commission on Environmental Quality (TCEQ).
2. The contractor shall not allow sediment to leave the work area or enter any adjoining channels. Additional measures to those shown on this plan and described in these notes may be required to prevent sediment from leaving the work area. The contractor shall be responsible for clean-up and restoration to original condition, including establishment or re-vegetation of any lands or channels affected should construction sediment be found outside of limits of construction work.
3. All disturbed areas are to have establishment of grass as outlined below. Contractor is responsible for watering, maintenance and establishment of grass for a period of 90 days beyond project acceptance by City of College Station. Contractor to guarantee all planted material growth and coverage for a period of 6 mos. Growth and coverage shall be defined as 95% of the planted area with uniform coverage of grass greater than 1" in height with no bare spots greater than 2 square feet. A Second application of fibermulch is required for bare spots not meeting coverage requirement within 60 days of initial application.
4. Contractor is to maintain erosion control throughout duration of the project such that all ditch sections are to plan grades once vegetation is established. Insure sediment is not transported downstream from project via hay bales or silt fence installation. If erosion is observed in the field, additional erosion controls shall be installed.
5. Silt fencing is to be installed per detail. In lieu of silt fencing, contractor may use hay bale installation or continuous extruded fabric berm filled with 3/4" gravel upon approval of the engineer. Sediment to be cleaned from silt fencing or other sediment control devices when depth of sediment reaches ~1/3 total height of device. Contractor is to insure erosion control devices are consistently installed and properly maintained.

NOI & NOT INFORMATION:

1. SITE DESCRIPTION
   This 11.2 Ac. construction site is located in eastern Bryan between FM 1179 and Austin's Colony Subdivision. The site is located at North Latitude 30°40'49" and West Longitude 96°19'07". The activity consists of the construction of streets and sidewalk. The only source of pollution is the erosion of exposed soil. Storm water from the site flows to Carters Creek. The contractor is responsible for containing all sediment on-site by utilizing siltation control devices, washdown areas, or seeding and sodding applications. It is the responsibility of the contractor to utilize whatever techniques that are necessary to prevent erosion from this construction.

LEGEND

SILT FENCE

STATE OF TEXAS
JEFFERY L. ROBERTSON
94745
LICENSED PROFESSIONAL ENGINEER
12/1/2009

ISSUED FOR BIDDING AND CONSTRUCTION

DATE:	DEC 2009
DRAWN BY:	DRL
DESIGNED BY:	SCF
CHECKED BY:	JLR

1001001.3-005-18.dwg

REVISIONS

McCLURE & BROWNE ENGINEERING/SURVEYING, INC.
1008 Woodcreek Drive, Suite 103
College Station, Texas 77845
(979) 693-3838

M&B

INITIAL EROSION CONTROL PLAN

THORNBERRY DRIVE

SHEET NO.

18

OF 19 SHEETS

NOTE:
TYPE "G" EXPANSION JOINTS IN CURB & GUTTER SHALL BE SPACED AT A MAXIMUM DISTANCE OF 60' APART AND AT ALL RADIUS POINTS, P.T.'S AND P.C.'S. TYPE "B" CONTRACTION JOINTS IN CURB & GUTTER SHALL BE SPACED AT A MAXIMUM DISTANCE OF 10' APART.

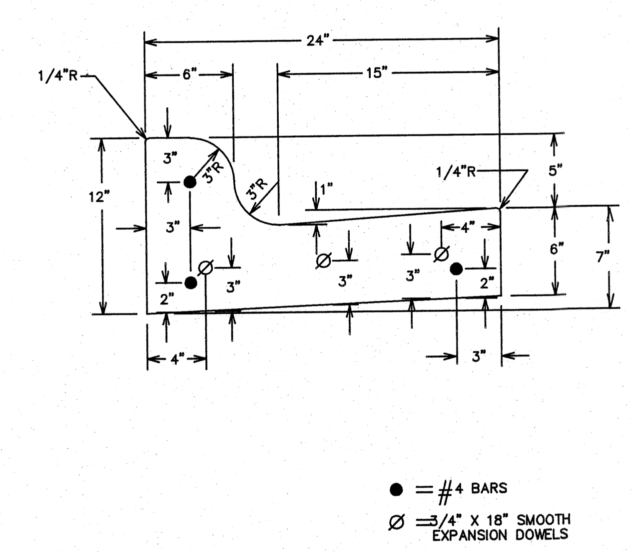

TYPICAL COMBINED CURB & GUTTER SECTION

CITY OF BRYAN — DATE: JAN. 2009 — B/CS UNIFIED STANDARD DETAIL — DETAIL NO. ST1-01 — CITY OF COLLEGE STATION

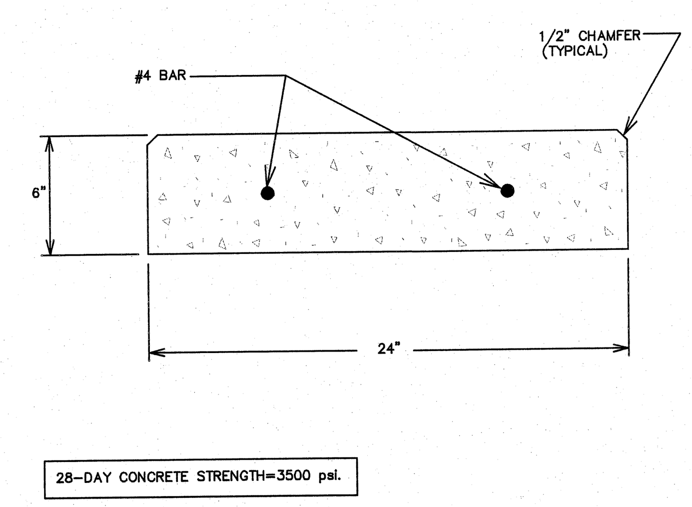

TYPICAL RIBBON CURB

CITY OF BRYAN — DATE: JAN. 2009 — B/CS UNIFIED STANDARD DETAIL — DETAIL NO. ST1-03 — CITY OF COLLEGE STATION

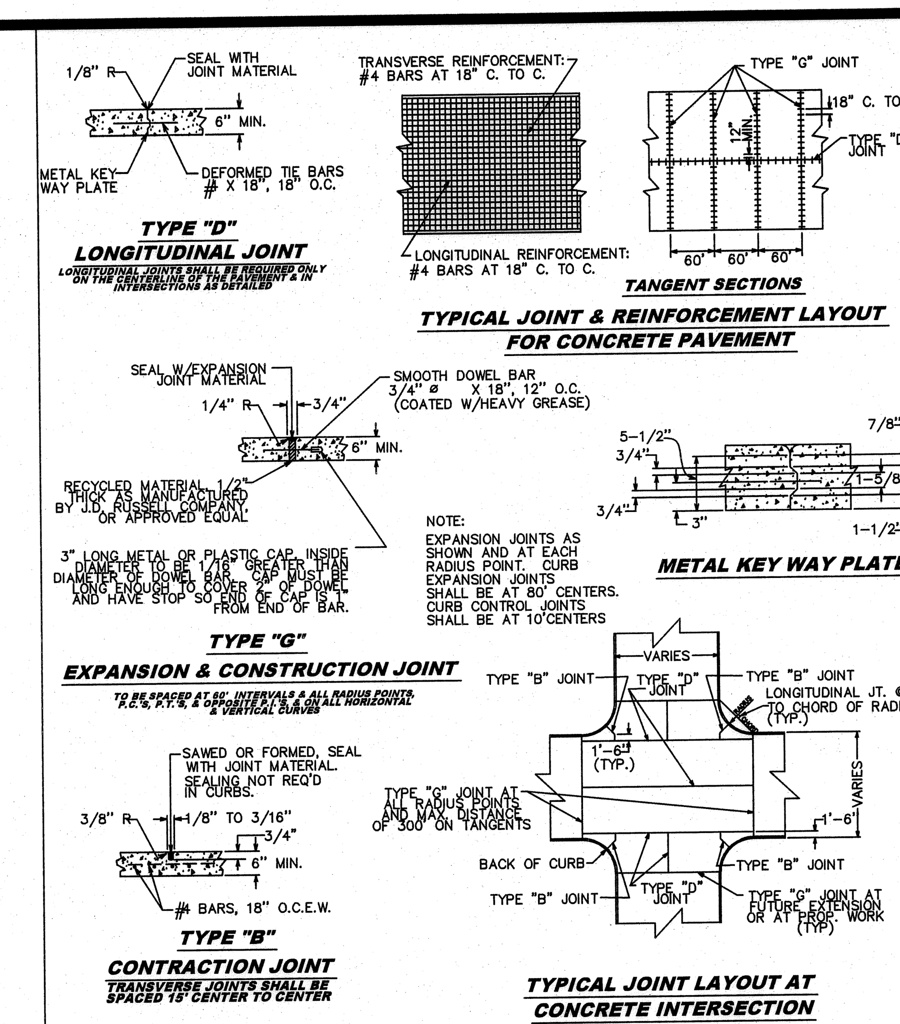

CONCRETE PAVEMENT JOINT LAYOUT

CITY OF BRYAN — DATE: JAN. 2009 — B/CS UNIFIED STANDARD DETAIL — DETAIL NO. ST3-00 — CITY OF COLLEGE STATION

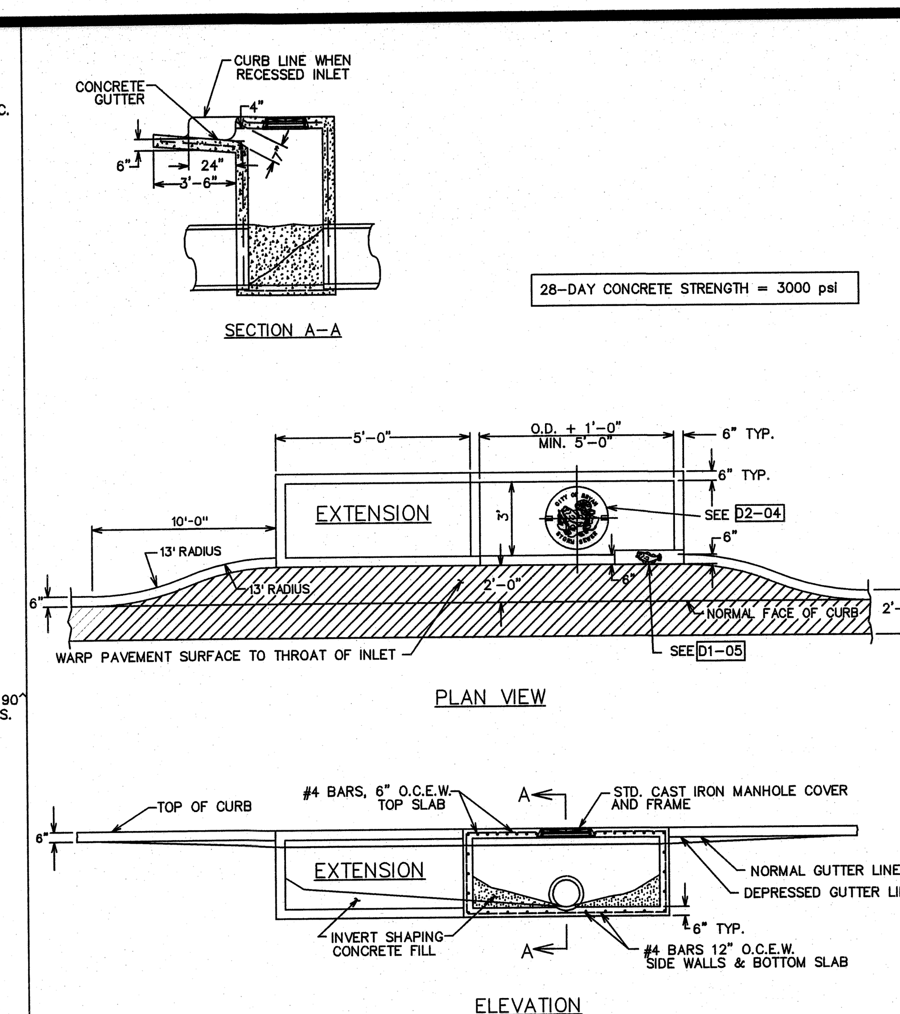

SINGLE RECESSED CURB INLET & CURB INLET W/EXTENSION

CITY OF BRYAN — DATE: JAN. 2009 — B/CS UNIFIED STANDARD DETAIL — DETAIL NO. D1-00 — CITY OF COLLEGE STATION

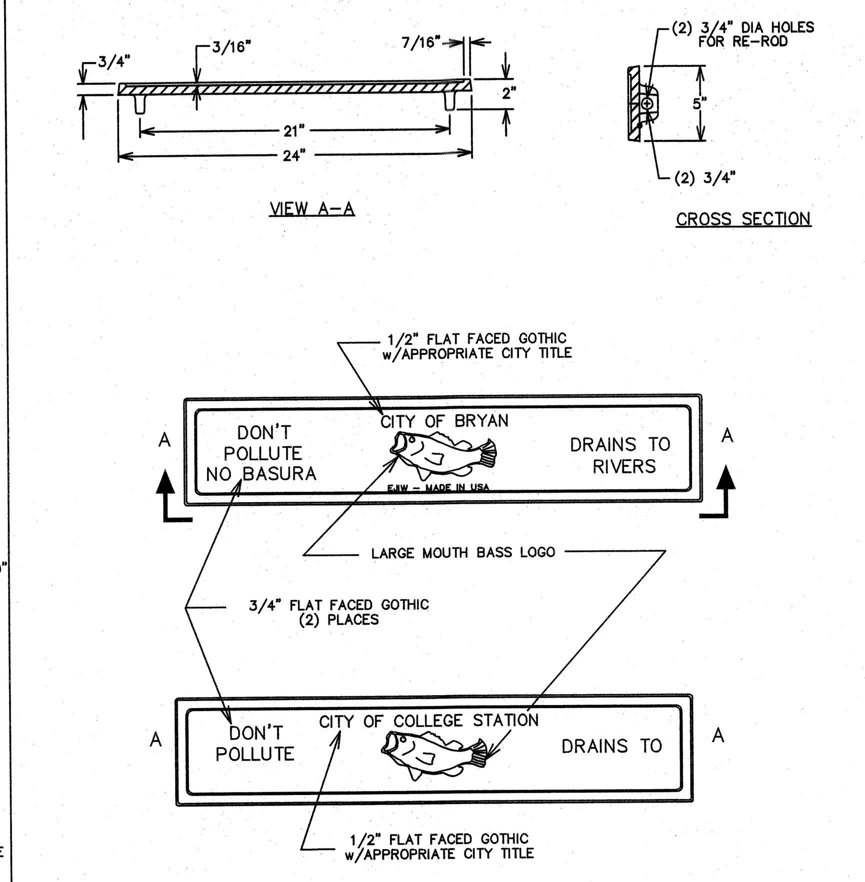

TROUT LOGO PLATE

CITY OF BRYAN — DATE: JAN. 2009 — B/CS UNIFIED STANDARD DETAIL — DETAIL NO. D1-05 — CITY OF COLLEGE STATION

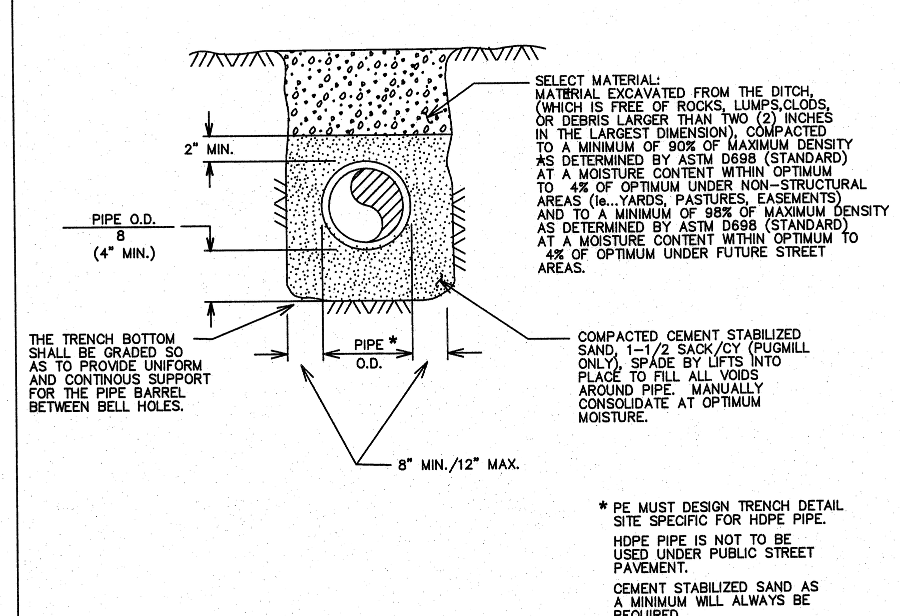

BEDDING AND TRENCH FOR REINFORCED CONCRETE PIPE

CITY OF BRYAN — DATE: JAN. 2009 — B/CS UNIFIED STANDARD DETAIL — DETAIL NO. D3-02 — CITY OF COLLEGE STATION

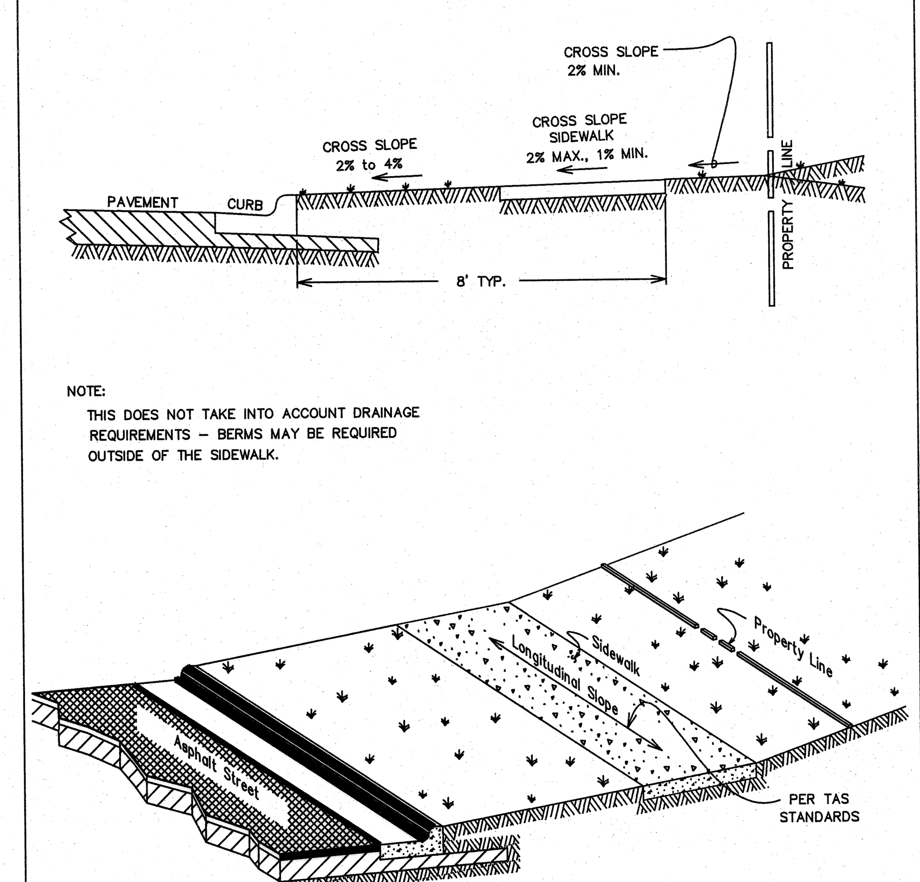

NOTE:
THIS DOES NOT TAKE INTO ACCOUNT DRAINAGE REQUIREMENTS - BERMS MAY BE REQUIRED OUTSIDE OF THE SIDEWALK.

SIDEWALK SLOPE REQUIREMENTS

CITY OF BRYAN — DATE: JAN. 2009 — B/CS UNIFIED STANDARD DETAIL — DETAIL NO. SW1-00 — CITY OF COLLEGE STATION

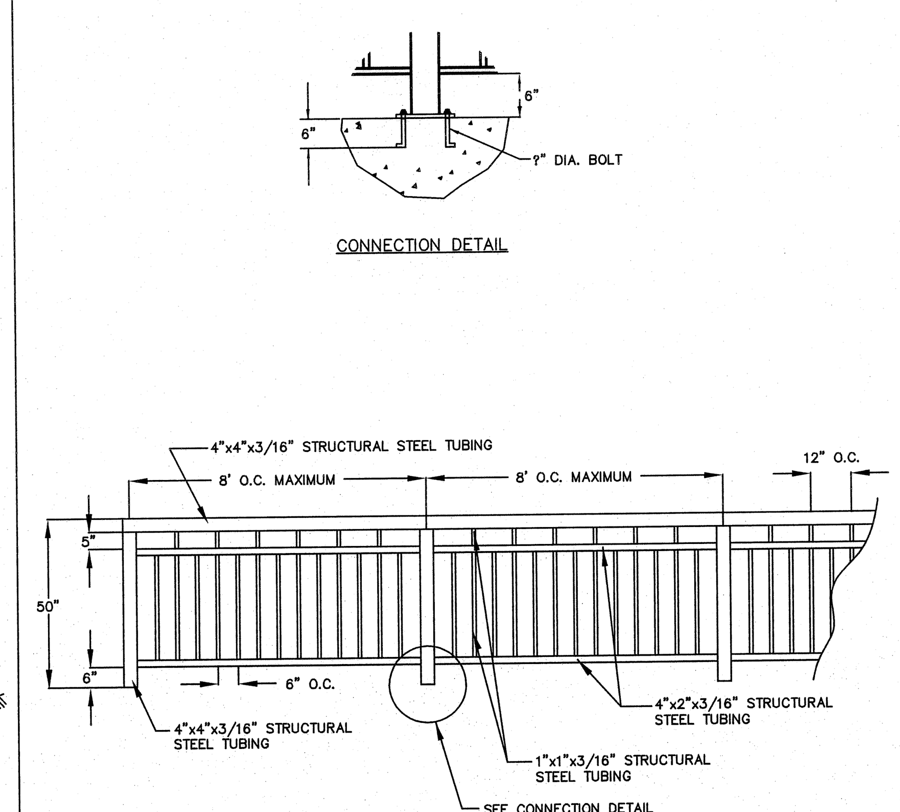

TYPICAL PEDESTRIAN GUARDRAIL

CITY OF BRYAN — DATE: JAN. 2009 — B/CS UNIFIED STANDARD DETAIL — DETAIL NO. SW1-01 — CITY OF COLLEGE STATION

1. ALL SLOPES ARE MAXIMUM ALLOWABLE. THE LEAST POSSIBLE SLOPE THAT WILL STILL DRAIN PROPERLY SHOULD BE USED. ADJUST CURB RAMP LENGTH OR GRADE OF APPROACH SIDEWALKS AS DIRECTED.
2. LANDINGS SHALL BE A 5' X 5' MINIMUM WITH A MAXIMUM 2% SLOPE IN ANY DIRECTION.
3. MANEUVERING SPACE AT THE BOTTOM OF CURB RAMPS SHALL BE A MINIMUM OF 4' X 4' WHOLLY CONTAINED WITHIN THE CROSSWALK AND WHOLLY OUTSIDE THE PARALLEL VEHICULAR TRAVEL PATH.
4. MAXIMUM ALLOWABLE CROSS SLOPE ON SIDEWALK AND CURB RAMP IS 2%.
5. CURB RAMPS WITH RETURNED CURBS MAY BE USED ONLY WHERE PEDESTRIANS WOULD NOT NORMALLY WALK ACROSS THE RAMP, EITHER BECAUSE THE ADJACENT SURFACE IS PLANTING OR OTHER NON-WALKING SURFACE OR BECAUSE THE SIDE APPROACH IS SUBSTANTIALLY OBSTRUCTED. OTHERWISE, PROVIDE FLARED SIDES.
6. ADDITIONAL INFORMATION ON CURB RAMP LOCATION, DESIGN, LIGHT RELECTIVE VALUE AND TEXTURE MAY BE FOUND IN THE CURRENT EDITION OF THE TEXAS ACCESSIBILITY STANDARDS (TAS) AND 16 TAC 68.102.
7. TO SERVE AS A PEDESTRIAN REFUGE AREA, THE MEDIAN SHOULD BE A MINIMUM OF 5' WIDE. MEDIANS SHOULD BE DESIGNED TO PROVIDE ACCESSIBLE PASSAGE OVER OR THROUGH THEM.
8. CROSSWALK DIMENSIONS, CROSSWALK MARKINGS AND STOP BAR LOCATIONS SHALL BE AS SHOWN ELSEWHERE IN THE PLANS. AT INTERSECTIONS WHERE CROSSWALK MARKINGS ARE NOT REQUIRED, CURB RAMPS SHALL BE ALIGNED WITH THEORETICAL CROSSWALKS, OR AS DIRECTED BY THE ENGINEER.
9. EXISTING FEATURES THAT COMPLY WITH TAS MAY REMAIN IN PLACE UNLESS OTHERWISE SHOWN ON THE PLANS.
10. HANDRAILS ARE NOT REQUIRED ON CURB RAMPS. PROVIDE CURB RAMPS WHEREVER ON ACCESSIBLE ROUTE CROSSES (PENETRATES) A CURB.
11. SEPARATE CURB RAMP AND LANDINGS FROM ADJACENT SIDEWALK AND ANY OTHER ELEMENTS WITH PREMOLD OR BOARD JOINT OF 3/4" UNLESS OTHERWISE DIRECTED BY THE ENGINEER.
12. PROVIDE A SMOOTH TRANSITION WHERE THE CURB RAMPS CONNECT TO THE STREET.
13. FLARE SLOPE SHALL NOT EXCEED 10% MEASURED ALONG CURB LINE.

GENERAL NOTES FOR SIDEWALK CONSTRUCTION

CITY OF BRYAN — DATE: JAN. 2009 — B/CS UNIFIED STANDARD DETAIL — DETAIL NO. SW2-GN — CITY OF COLLEGE STATION

NOTE:
HAY BALES ARE USED TO DETAIN AND/OR FILTER SEDIMENT-LADEN RUNOFF. THE PROTECTION ALLOWS SEDIMENT TO SETTLE PRIOR TO DISCHARGE INTO A STORM DRAIN INLET OR CATCH BASIN.

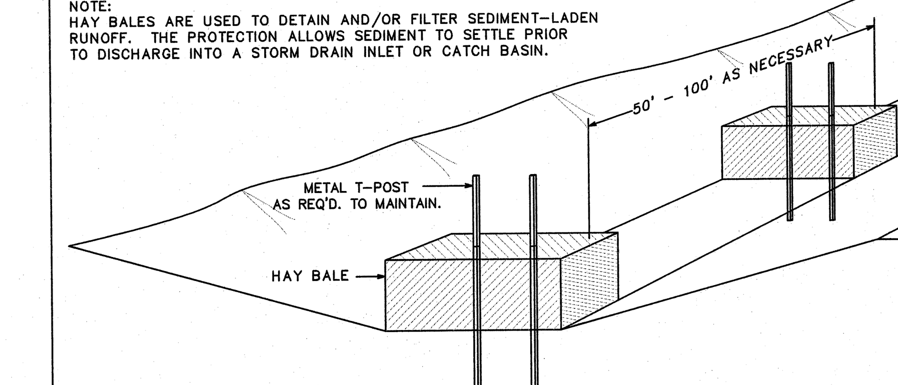

EROSION CONTROL ALONG DITCH

CITY OF BRYAN — DATE: JAN. 2009 — B/CS UNIFIED STANDARD DETAIL — DETAIL NO. SWPP1-01 — CITY OF COLLEGE STATION

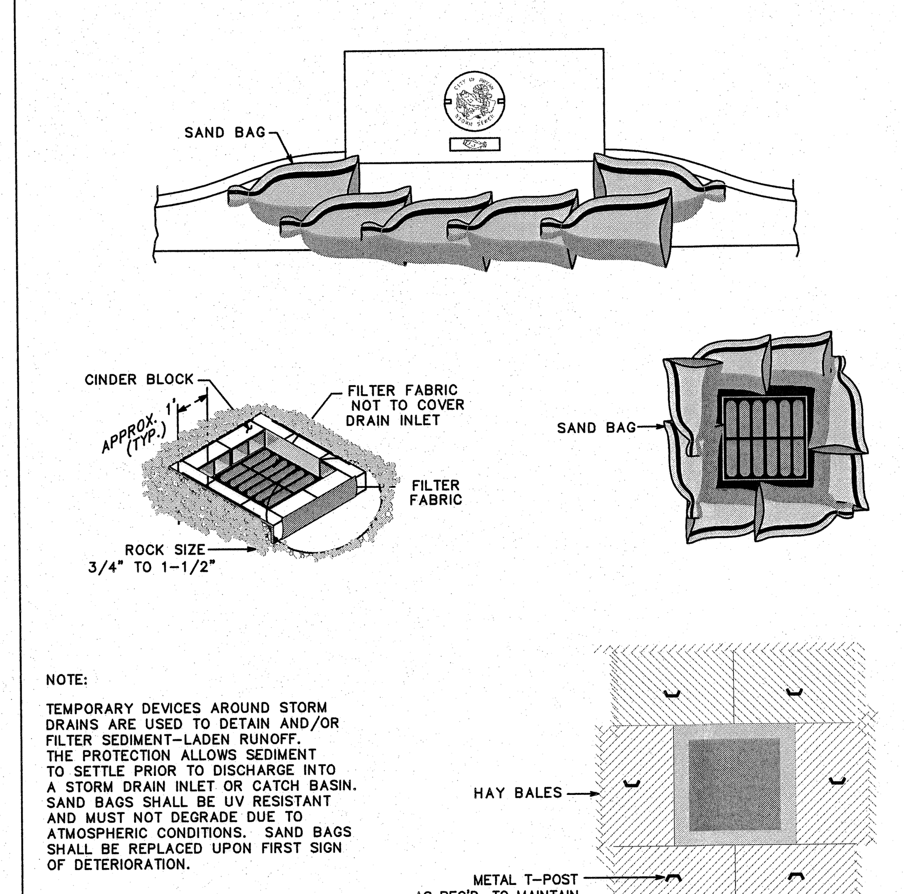

NOTE:
TEMPORARY DEVICES AROUND STORM DRAINS ARE USED TO DETAIN AND/OR FILTER SEDIMENT-LADEN RUNOFF. THE PROTECTION ALLOWS SEDIMENT TO SETTLE PRIOR TO DISCHARGE INTO A STORM DRAIN INLET OR CATCH BASIN. SAND BAGS SHALL BE UV RESISTANT AND MUST NOT DEGRADE DUE TO ATMOSPHERIC CONDITIONS. SAND BAGS SHALL BE REPLACED UPON FIRST SIGN OF DETERIORATION.

STORM DRAIN INLET PROTECTION

CITY OF BRYAN — DATE: JAN. 2009 — B/CS UNIFIED STANDARD DETAIL — DETAIL NO. SWPP1-00 — CITY OF COLLEGE STATION

NOTE:
DRESS WITH ADDITIONAL STONE AS NEEDED. STONE IS TO BE MAINTAINED SO AS TO PREVENT CONSTRUCTION TRAFFIC FROM TRACKING MUD ONTO ADJACENT PUBLIC STREETS.

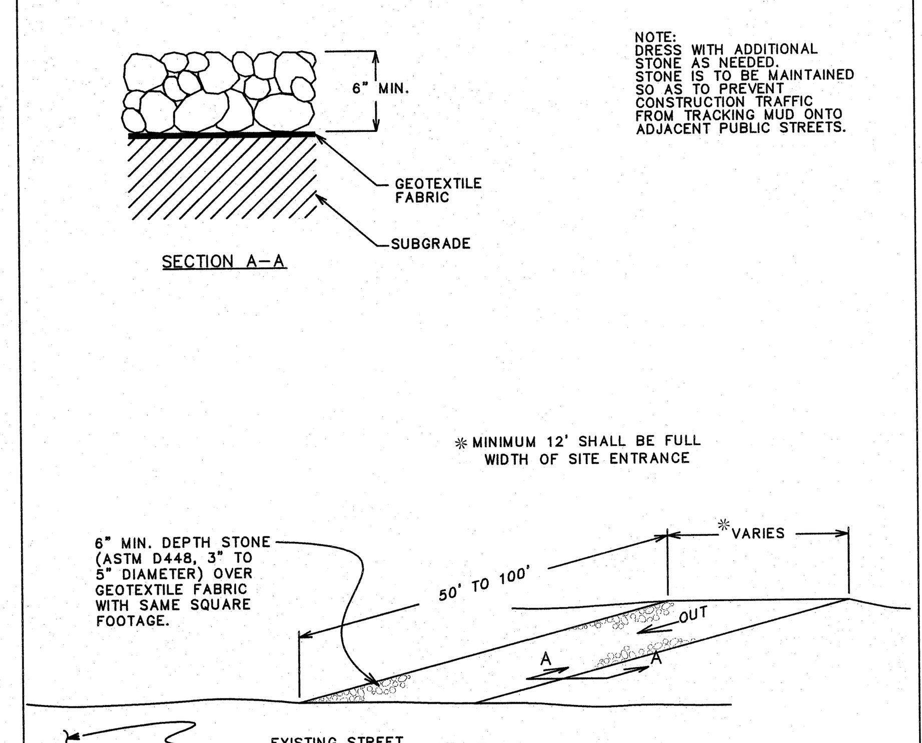

CONSTRUCTION EXIT SLIT CONTROL

CITY OF BRYAN — DATE: JAN. 2009 — B/CS UNIFIED STANDARD DETAIL — DETAIL NO. SWPP1-02 — CITY OF COLLEGE STATION

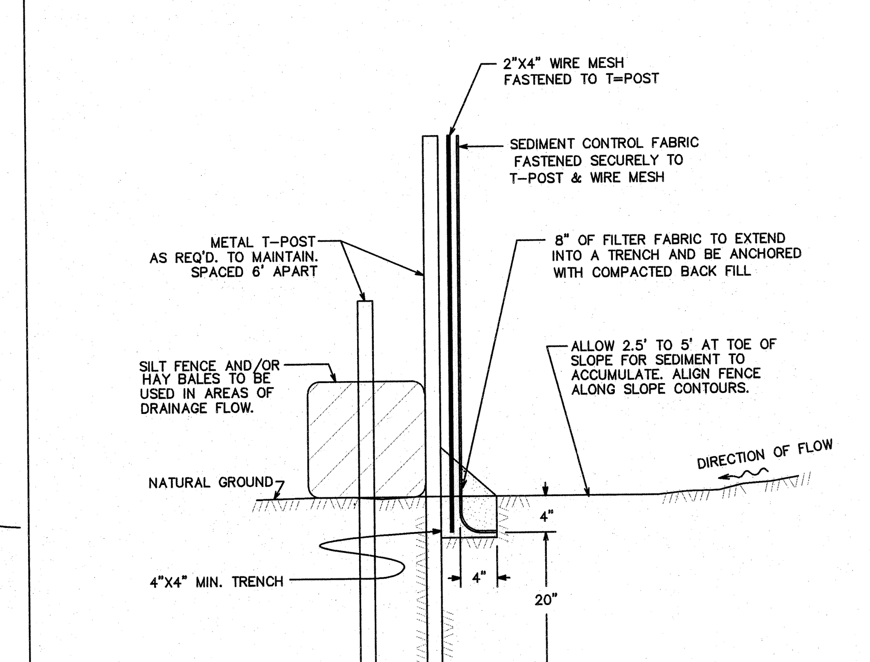

SILT FENCE ASSEMBLY

CITY OF BRYAN — DATE: JAN. 2009 — B/CS UNIFIED STANDARD DETAIL — DETAIL NO. SWPP1-03 — CITY OF COLLEGE STATION

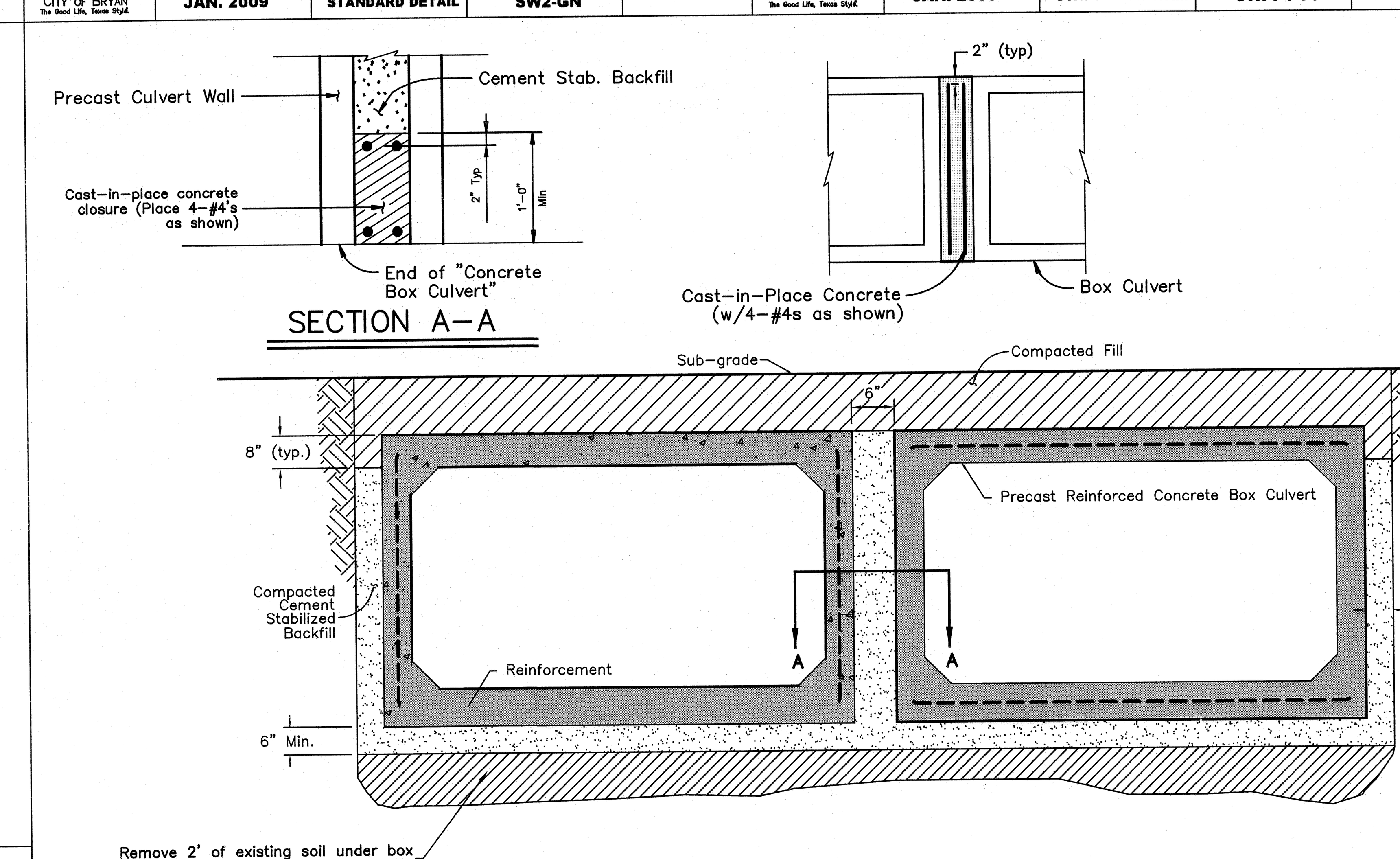

TYPICAL PRECAST BOX CULVERT EMBEDMENT DETAILS

STATE OF TEXAS — 12/16/2009 — JEFFERY L. ROBERTSON — 94745 — LICENSED PROFESSIONAL ENGINEER

ISSUED FOR BIDDING AND CONSTRUCTION.

DATE: DEC 2009
DRAWN BY: DRL
DESIGNED BY: SCF
CHECKED BY: JLR
10010013-005-19.dwg

REVISIONS
1 12/16/09-JLR-Revised per City Comments.

McCLURE & BROWNE ENGINEERING/SURVEYING, INC.
1008 Woodcreek Drive, Suite 103
College Station, Texas 77845
(979) 693-3838

MISCELLANEOUS DETAILS
THORNBERRY DRIVE

SHEET NO. 19 OF 19 SHEETS

DISCLAIMER
The use of this standard is governed by the "Texas Engineering Practice Act". No warranty of any kind is made by TxDOT for any purpose whatsoever. TxDOT assumes no responsibility for the conversion of this standard to other formats or for incorrect results or damages resulting from its use.

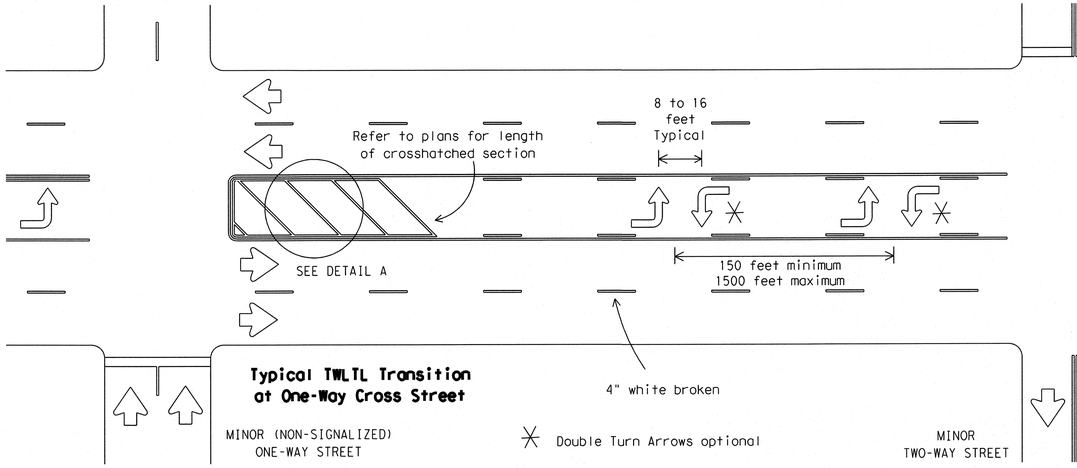

Typical TWLTL Transition at One-Way Cross Street

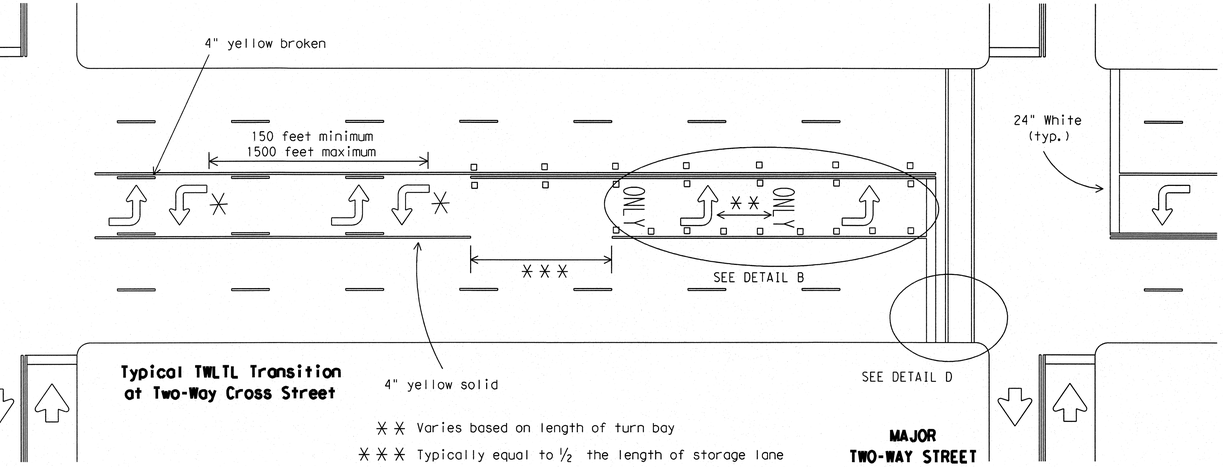

Typical TWLTL Transition at Two-Way Cross Street

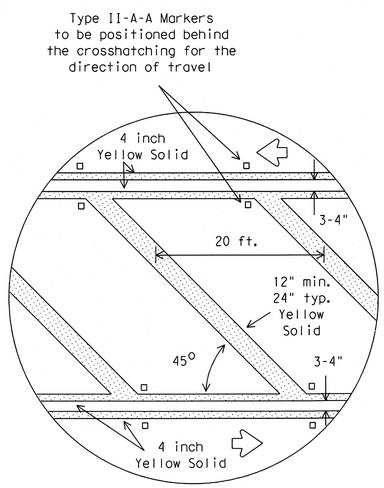

DETAIL A

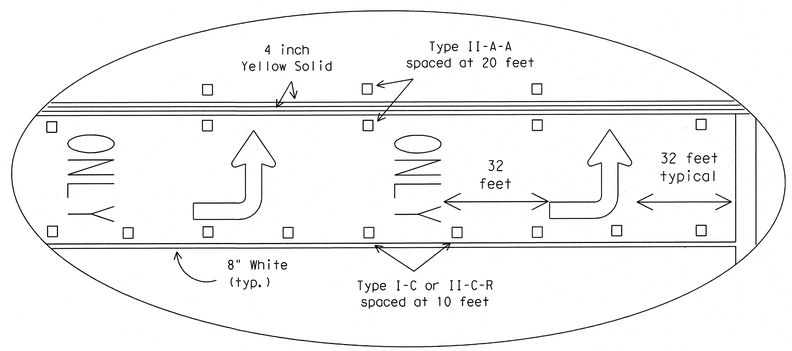

DETAIL B

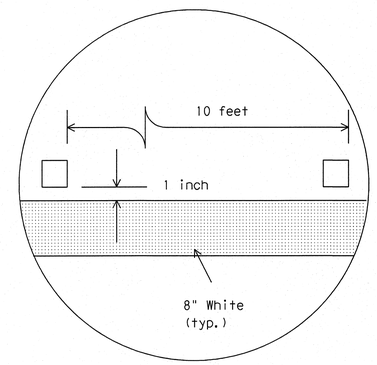

DETAIL C

Raised pavement marker Type I-C with undivided highways, flush medians and two way left turn lanes. Raised pavement marker Type II-C-R with divided highways and raised medians.

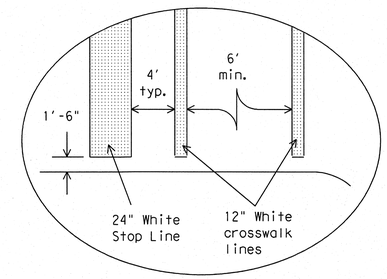

DETAIL D

Final placement of Stop Bar and Crosswalk shall be approved by the Engineer in the field.

GENERAL NOTES

Refer elsewhere in plans for additional RPM placement and details.

Details for words and arrows as shown on other sheets.

All pavement marking materials shall meet the required Departmental Material Specifications as specified by the plans.

For a left turn bay, two sets of words and arrows shall be used if the length of the bay is equal to or greater than 180 feet. The bottom of the first ONLY shall be placed at the beginning of the turn bay lane line as shown above.

Other crosswalk paterns as shown in the "Texas Manual on Uniform Traffic Control Devices" may be used.

SPECIFICATION REFERENCE TABLE

MATERIAL SPECIFICATIONS	
PAVEMENT MARKERS (REFLECT.)	DMS-4200
EPOXY	DMS-6100
BITUMINOUS ADHESIVE FOR PAVE. MKS.	DMS-6130

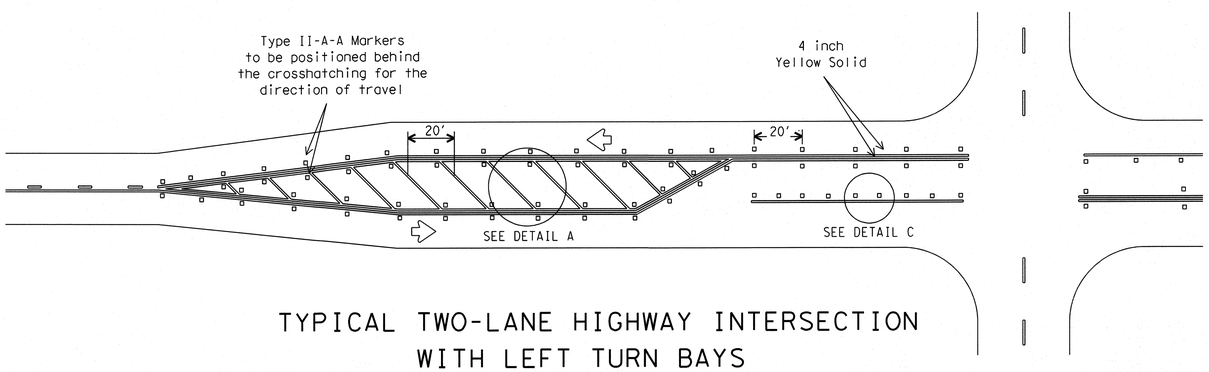

TYPICAL TWO-LANE HIGHWAY INTERSECTION WITH LEFT TURN BAYS

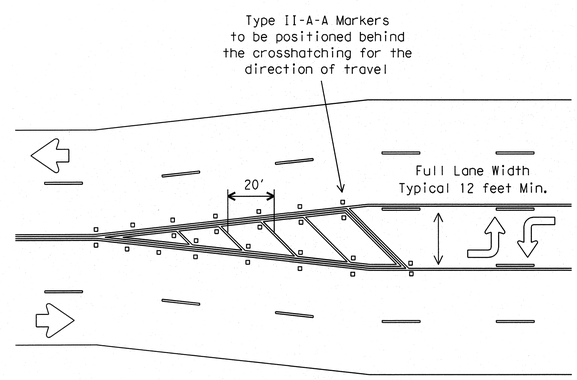

TYPICAL TRANSITION FOR TWLTL AND DIVIDED HIGHWAY

STANDARD PLANS
Texas Department of Transportation
Traffic Operations Division

PAVEMENT MARKINGS FOR TWO-WAY LEFT TURN LANES DIVIDED HIGHWAYS AND RURAL LEFT TURN BAYS

PM(4)-03

©TxDOT April 1998	DN: BAS	CK: GRB	DW: FDN	CK: CAL		NEG NO.:
REVISIONS 5-00 8-00 3-03	STATE DISTRICT	FEDERAL REGION 6	FEDERAL AID PROJECT			SHEET
	COUNTY		CONTROL	SECTION	JOB	HIGHWAY

LEVELS DISPLAYED
1 2 3 4 5 6 7 8 9 10 11 12 13 14 15 16
1 11 01 02 12 22 32 42 52 62 72 82 92 03 13 23
3 33 43 53 63 73 83 93 04 14 24 34 44 54 64 74 84
49 59 65 15 25 35 45 55 65 75 85 95 06 16 26 36

ACC:

DISCLAIMER
The use of this standard is governed by the "Texas Engineering Practice Act". No warranty of any kind is made by TxDOT for any purpose whatsoever. TxDOT assumes no responsibility for the conversion of this standard to other formats or for incorrect results or damages resulting from its use.

SIGN SUPPORT DESCRIPTIVE CODES

(Descriptive Codes correspond to project estimate and quantities sheets)

SM RD SGN ASSM TY XXXXX(X)XX(X-XXXX)

Post Type

FRP = Fiberglass Reinforced Plastic Pipe (see SMD(FRP))
TWT = Thin-Walled Tubing (see SMD(TWT))
10BWG = 10 BWG Tubing (see SMD(SLIP-1) to (SLIP-3))
S80 = Schedule 80 Pipe (see SMD(SLIP-1) to (SLIP-3))

Number of Posts (1 or 2)

Anchor Type

UA = Universal Anchor - Concreted (see SMD(FRP) and (TWT))
UB = Universal Anchor - Bolted down (see SMD(FRP) and (TWT))
WS = Wedge Anchor Steel - (see SMD(TWT))
WP = Wedge Anchor Plastic (see SMD(TWT))
SA = Slipbase - Concreted (see SMD(SLIP-1) to (SLIP-3))
SB = Slipbase - Bolted Down (see SMD(SLIP-1) to (SLIP-3))

Sign Mounting Designation

P = Prefab. "Plain" (see SMD(SLIP-1) to (SLIP-3), (TWT), (FRP))
T = Prefab. "T" (see SMD(SLIP-1) to (SLIP-3), (TWT))
U = Prefab. "U" (see SMD(SLIP-1) to (SLIP-3))
IF REQUIRED
1EXT or 2EXT = Number of Extensions (see SMD(SLIP-1) to (SLIP-3), (TWT))
BM = Extruded Wind Beam (see SMD(SLIP-1) to (SLIP-3))
WC = 1.12 #/ft Wing Channel (see SMD(SLIP-1) to (SLIP-3))
EXAL = Extruded Aluminum Sign Panels (see SMD(SLIP-3))

REQUIRED CLEARANCE FOR BREAKAWAY SUPPORT

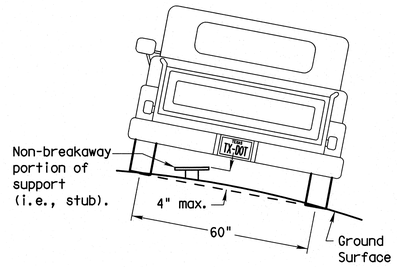

To avoid vehicle undercarriage snagging, any substantial remains of a breakaway support, when it is broken away, should not project more than 4 inches above a 60-inch chord (i.e., typical space between wheel paths).

SIGN LOCATION

PAVED SHOULDERS

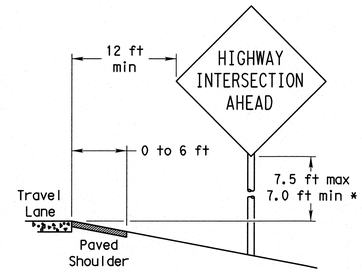

LESS THAN 6 FT. WIDE

When the shoulder is 6 ft. or less in width, the sign must be placed at least 12 ft. from the edge of the travel lane.

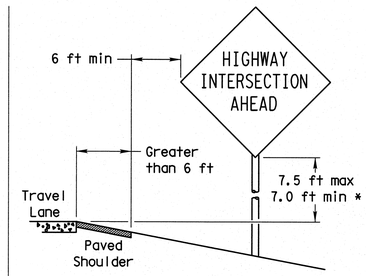

GREATER THAN 6 FT. WIDE

When the shoulder is greater than 6 ft in width, the sign must be placed at least 6 ft. from the edge of the shoulder.

T-INTERSECTION

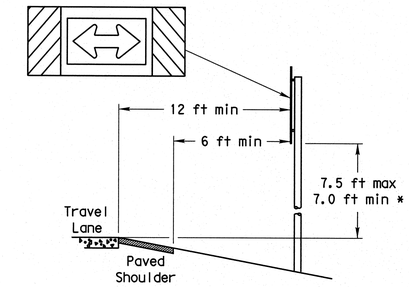

When this sign is needed at the end of a two-lane, two way roadway, the right edge of the sign should be in line with the centerline of the roadway. Place as close to ROW as practical.

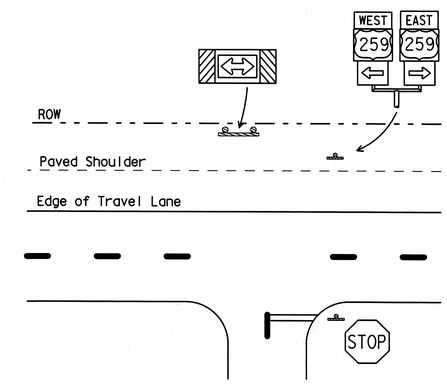

BEHIND BARRIER

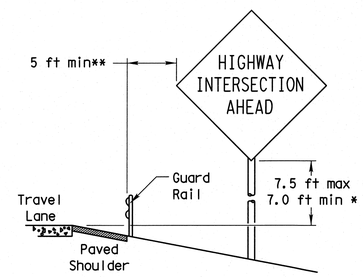

BEHIND GUARDRAIL

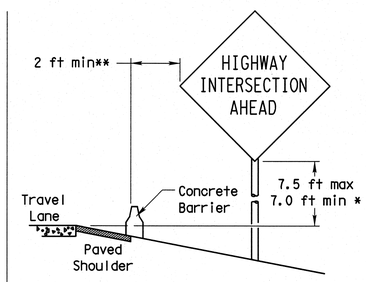

BEHIND CONCRETE BARRIER

**Sign clearance based on distance required for proper guard rail or concrete barrier performance.

* Signs shall be mounted using the following condition that results in the greatest sign elevation:

(1) a minimum of 7 to a maximum of 7.5 feet above the edge of the travel lane or

(2) a minimum of 7 to a maximum of 7.5 feet above the grade at the base of the support when sign is installed on the backslope.

The maximum values may be increased when directed by the Engineer.

See the Traffic Operations Division website for detailed drawings of sign clamps, Triangular Slipbase System components and Wedge Anchor System components.

The website address is:
http://www.txdot.gov/publications/traffic.htm

No more than 2 sign posts should be located within a 7 ft. circle.

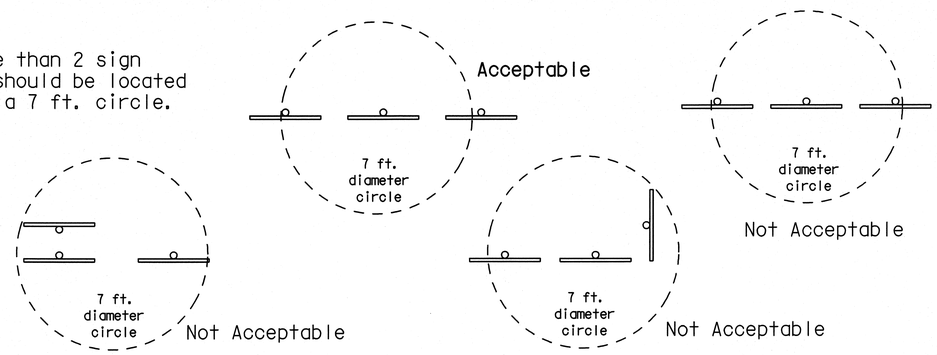

TYPICAL SIGN ATTACHMENT DETAIL

Single Signs

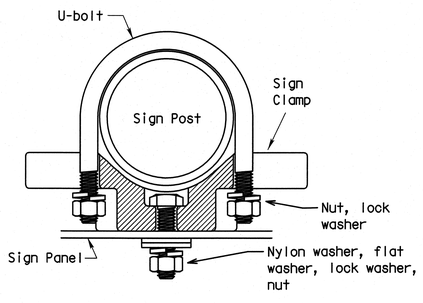

Bolts used to mount sign panels to the clamp are 5/16-18 UNC galvanized square head with nut, nylon washer, flat washer and lock washer. The bolt length is 1 inch for aluminum.

When two sign clamps are used to mount signs back-to-back, use a 5/16-18 UNC galvanized hex head per ASTM A307 with nut and helical-spring lock washer. The approximate bolt lengths for various post sizes and sign clamp types are given in the table at right. The bolt length may need to be adjusted depending upon field conditions.

Sign clamps may be either the specific size clamp or the universal clamp.

Back-to-Back Signs

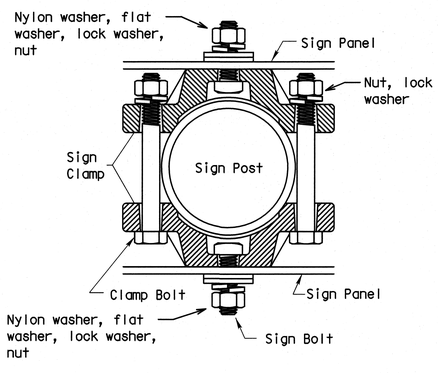

Pipe Diameter	Approximate Bolt Length	
	Specific Clamp	Universal Clamp
2" nominal	3"	3 or 3 1/2"
2 1/2" nominal	3 or 3 1/2"	3 1/2 or 4"
3" nominal	3 1/2 or 4"	4 1/2"

SIGNS WITH PLAQUES

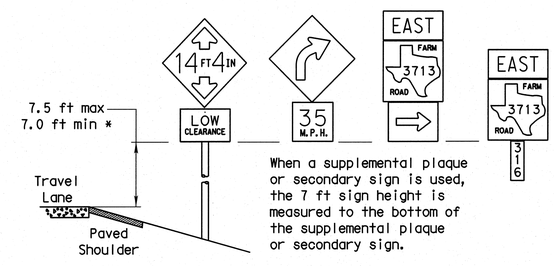

When a supplemental plaque or secondary sign is used, the 7 ft sign height is measured to the bottom of the supplemental plaque or secondary sign.

CURB & GUTTER OR RAISED ISLAND

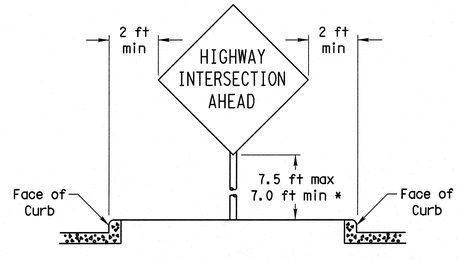

RESTRICTED RIGHT-OF-WAY

(When 6 ft min. is not possible.)

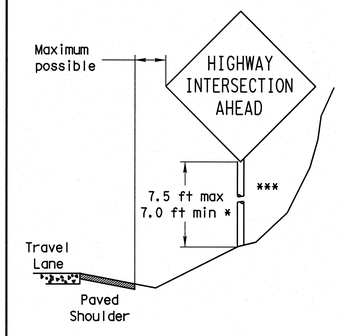

Right-of-way restrictions may be created by rocks, water, vegetation, forest, buildings, a narrow island, or other factors.

In situations where a lateral restriction prevents the minimum horizontal clearance from the edge of the travel lane, signs should be placed as far from the travel lane as practical.

*** Post may be shorter if protected by guardrail or if Engineer determines the post could not be hit due to extreme slope.

STANDARD PLANS
TEXAS DEPARTMENT OF TRANSPORTATION
Traffic Operations Division

SIGN MOUNTING DETAILS SMALL ROADSIDE SIGNS GENERAL NOTES & DETAILS

SMD(GEN)-08

©TxDOT July 2002	DN: TxDOT	CK: TxDOT	DW: TxDOT	CK: TxDOT	
REVISIONS 9-08	STATE DISTRICT	FEDERAL REGION 6	FEDERAL AID PROJECT		SHEET
	COUNTY		CONTROL	SECTION	JOB	HIGHWAY

LEVELS DISPLAYED
1 2 3 4 5 6 7 8 9 10 11 12 13 14 15 16
17 18 19 20 21 22 23 24 25 26 27 28 29 30 31 32
33 34 35 36 37 38 39 40 41 42 43 44 45 46 47 48
49 50 51 52 53 54 55 56 57 58 59 60 61 62 63
ACC:

TABLE OF DIMENSIONS & REINFORCING STEEL
(Wings for One Structure End)

Dimensions					Variable Reinforcing				Estimated ④ Quantities per ft of wing (2~Wings)		Estimated Quantities per ft of Toewall (1~Toewall)	
					Bars J1		Bars J2					
Maximum Wingwall Height Hw	W	X	Y	Z	Size	Spa	Size	Spa	Reinf (Lb/Ft)	Conc (CY/Ft)	Reinf (Lb/Ft)	Conc (CY/Ft)
2'-6"	2'-10"	10"	1'- 0"	7"	#4	1'-0"	#4	1'-0"	43.13	0.406	6.85	0.071
2'-9"	2'-10"	10"	1'- 0"	7"	#4	1'-0"	#4	1'-0"	43.80	0.424	6.85	0.071
3'-0"	2'-10"	10"	1'- 0"	7"	#4	1'-0"	#4	1'-0"	44.47	0.444	6.85	0.071
3'-3"	2'-10"	10"	1'- 0"	7"	#4	1'-0"	#4	1'-0"	47.81	0.462	6.85	0.071
3'-6"	2'-10"	10"	1'- 0"	7"	#4	1'-0"	#4	1'-0"	48.48	0.480	6.85	0.071
4'-0"	3'- 2"	1'- 2"	1'- 0"	7"	#4	1'-0"	#4	1'-0"	50.26	0.532	6.85	0.071
4'-6"	3'- 2"	1'- 2"	1'- 0"	7"	#4	1'-0"	#4	1'-0"	54.27	0.568	6.85	0.071
5'-0"	3'- 9"	1'- 7"	1'- 2"	7"	#4	1'-0"	#4	1'-0"	57.94	0.632	6.96	0.075
5'-6"	3'- 9"	1'- 7"	1'- 2"	7"	#4	1'-0"	#4	1'-0"	61.95	0.668	6.96	0.075
6'-0"	4'- 4"	2'- 0"	1'- 4"	7"	#5	1'-0"	#5	1'-0"	75.16	0.730	7.07	0.078
6'-6"	4'- 4"	2'- 0"	1'- 4"	7"	#5	1'-0"	#5	1'-0"	79.54	0.768	7.07	0.078
7'-0"	5'- 0"	2'- 3"	1'- 9"	8"	#5	1'-0"	#5	1'-0"	86.65	0.864	8.07	0.093
7'-6"	5'- 0"	2'- 3"	1'- 9"	8"	#5	1'-0"	#5	1'-0"	91.03	0.902	8.07	0.093
8'-0"	5'- 6"	2'- 8"	1'-10"	8"	#5	6"	#5	6"	133.54	0.962	8.13	0.095
8'-6"	5'- 6"	2'- 8"	1'-10"	8"	#5	6"	#5	6"	138.96	1.000	8.13	0.095
9'-6"	6'- 0"	2'-10"	2'- 2"	9"	#5	6"	#5	6"	151.43	1.136	8.41	0.110
10'-6"	6'- 5"	3'- 0"	2'- 5"	9"	#6	6"	#5	6"	190.76	1.234	8.57	0.117
11'-6"	7'- 2"	3'- 6"	2'- 8"	11"	#6	6"	#6	6"	224.62	1.438	9.52	0.140
12'-6"	7'- 8"	3'- 9"	2'-11"	1'- 0"	#7	6"	#6	6"	277.90	1.592	9.74	0.157
13'-6"	8'- 2"	4'- 0"	3'- 2"	1'- 2"	#8	6"	#6	6"	343.21	1.804	10.02	0.186
14'-6"	8'-10"	4'- 5"	3'- 5"	1'- 4"	#9	6"	#6	6"	427.43	2.046	10.30	0.218
15'-6"	9'- 6"	4'-10"	3'- 8"	1'- 6"	#9	6"	#7	6"	484.01	2.302	11.24	0.253
16'-0"	9'-11"	5'- 0"	3'-11"	1'- 7"	#9	6"	#7	6"	500.21	2.448	11.47	0.279

TABLE OF WINGWALL REINFORCING (2~Wings)

Bar	Size	No.	Spa
D1	#6	~	1'-0"
D2	#6	~	1'-0"
E1	#4	~	1'-0"
F	#4	~	1'-0"
G	#6	~	1'-0"
M1	#4	4	~
P	#4	~	1'-0"
V	#4	~	1'-0"

TABLE OF TOEWALL REINFORCING

Bar	Size	No	Spa
J3	#4	~	1'-0"
M2	#4	2	~
E2	#4	~	1'-0"

WING DIMENSION CALCULATIONS:

Formulas: (All values are in Feet)

Hw = H + T + C

Lw = (Hw) (SL) ÷ Cosine (V)

For Cast-in-place culverts:

Ltw = [(N) (S) + (N + 1) (U)] ÷ (Cosine V)

For Precast culverts:

Ltw = [(N) (2 U + S) + (N - 1) (0.5')] ÷ (Cosine V)

Total Wingwall Area (Two Wings ~ S.F.) = (2) (Hw) (Lw)

Hw = Height of Wingwall
Lw = Length of Wingwall
Ltw = Culvert Toewall Length
N = Number of Culvert Spans
SL:1 = Channel Slope ratio. (Horizontal: 1 Vertical, Usual value is 2:1)
V = Culvert Skew

See applicable box culvert standard for S, H, T and U values.

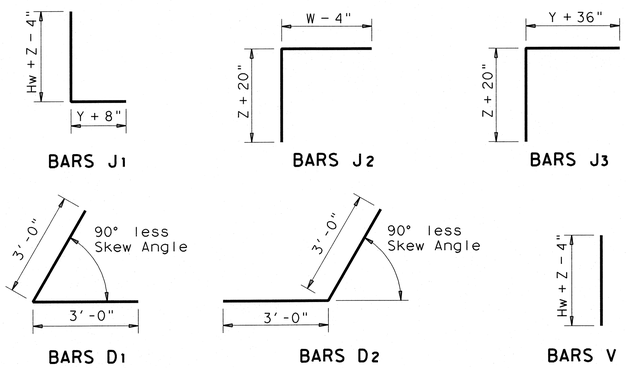

1. Skew Angle = 0°
2. At discharge end, chamfer may be ¾".
3. For 15° Skew ~ 1"
   For 30° Skew ~ 2"
   For 45° Skew ~ 3"
4. Quantities shown are for two wings. To determine total quantities for two wings, multiply the tabulated values by Lw.
5. Provide weepholes for Hw = 5'-0" and greater. Fill around weepholes with coarse gravel.
6. Extend Bars E1 1'-6" minimum into the bottom slab of the culvert.
7. Lap Bars M1 1'-6" minimum with Bars M2.
8. Bars G shall be equally spaced at 8" maximum, placed as shown. There shall be at least 4 Bars G per wing.
9. 0" min to 5'-0" max. For T6 or C6 Rail, see T6-CM standard for additional details. For all other rail types, refer to the RAC standard. For curbs without rail and greater than 1'-0" high, see ECD standard for additional details. Estimated curb heights are shown elsewhere in the plans.
10. For vehicle safety, the following requirements must be met:
    - For structures without bridge rail, curbs shall project no more than 3" above finished grade.
    - For structures with bridge rail, curbs shall be flush with finished grade.

    Curb heights shall be reduced, if necessary, to meet the above requirements. No changes will be made in quantities and no additional compensation will be allowed for this work.
11. 1'-0" typical. 2'-0" typical when RAC standard is referenced elsewhere in the plans.

GENERAL NOTES:

Designed according to current AASHTO Standard and Interim Specifications.

All reinforcing steel shall be Grade 60.

All concrete shall be Class "C" and shall have a minimum compressive strength of 3600 psi.

All reinforcing bars shall be adjusted to provide a minimum of 1 ¼" clear cover.

When structure is founded on solid rock, depth of toewalls for culverts and wingwalls may be reduced or eliminated as directed by the Engineer.

See BCS sheet for additional dimensions and information.

The quantities for concrete and reinforcing steel resulting from the formulas given on this sheet are for Contractor's information only.

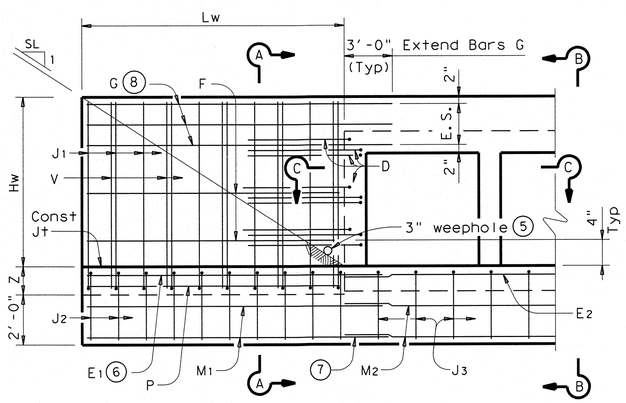

PARTIAL ELEVATION

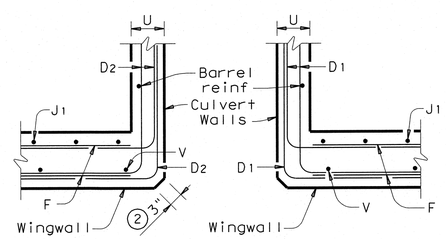

SECTION C-C

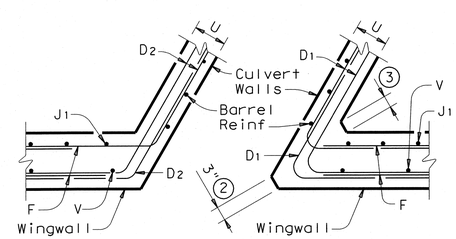

SECTION C-C

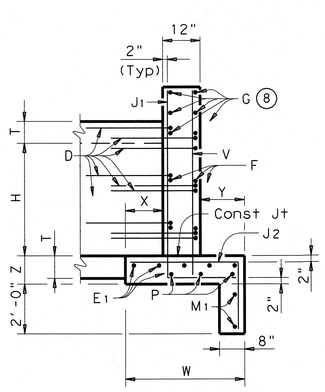

SECTION A-A

(Showing Wing Reinf)

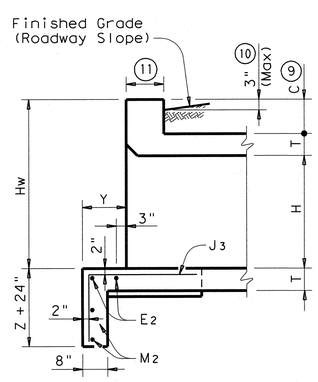

SECTION B-B

(Showing Toewall Reinf)

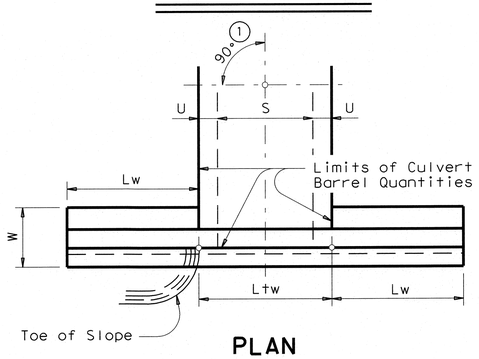

PLAN

DETAILS FOR NON-SKEWED BOX CULVERTS

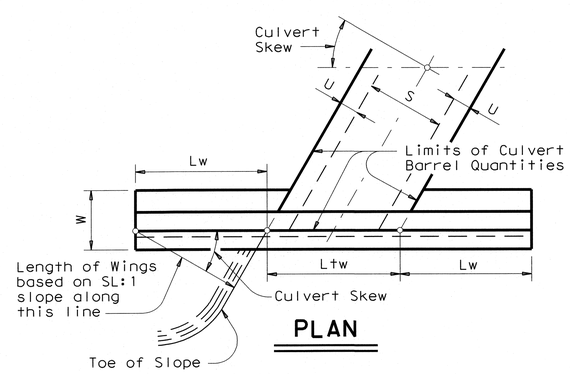

PLAN

DETAILS FOR SKEWED BOX CULVERTS

(Showing 30° Skew)

Texas Department of Transportation
Bridge Division

CONCRETE WINGWALLS
WITH PARALLEL WINGS FOR SKEWED AND NON-SKEWED BOX CULVERTS

PW

FILE: pwstde01.dgn	DN: GAF	CK: CAT	DW: TxDOT	CK: GAF
©TxDOT May 2005	DISTRICT	FEDERAL AID PROJECT		SHEET
REVISIONS 08-07: Size & No. of Bars D. Size & Lgth of Bars G.	COUNTY		CONTROL SECT JOB	HIGHWAY

DISCLAIMER:
The use of this standard is governed by the "Texas Engineering Practice Act". No warranty of any kind is made by TxDOT for any purpose whatsoever. TxDOT assumes no responsibility for the conversion of this standard to other formats or for incorrect results or damages resulting from its use.

ACC:
LEVELS DISPLAYED
1

TABLE OF DIMENSIONS & REINFORCING STEEL
(Wings for One Structure End)

Dimensions					Variable Reinforcing				Estimated (3) Quantities per ft of wing length (2~Wings)	
Maximum Wingwall Height Hw	W	X	Y	Z	Bars J1		Bars J2			
					Size	Spa	Size	Spa	Reinf (Lb/Ft)	Conc (CY/Ft)
2'-6"	2'- 5"	1'- 0"	9"	7"	#4	1'-0"	#4	1'-0"	33.73	0.248
3'-0"	2'- 5"	1'- 0"	9"	7"	#4	1'-0"	#4	1'-0"	37.07	0.261
3'-6"	2'- 5"	1'- 0"	9"	7"	#4	1'-0"	#4	1'-0"	37.74	0.273
4'-0"	2'- 5"	1'- 0"	9"	7"	#4	1'-0"	#4	1'-0"	38.41	0.285
4'-6"	3'- 2"	1'- 6"	1'- 0"	7"	#4	1'-0"	#4	1'-0"	41.75	0.330
5'-0"	3'- 2"	1'- 6"	1'- 0"	7"	#4	1'-0"	#4	1'-0"	45.09	0.343
5'-6"	3'- 2"	1'- 6"	1'- 0"	7"	#4	1'-0"	#4	1'-0"	45.75	0.355
6'-0"	3'- 2"	1'- 6"	1'- 0"	7"	#4	1'-0"	#4	1'-0"	46.42	0.367
7'-0"	3'- 8"	1'- 9"	1'- 3"	7"	#4	1'-0"	#4	1'-0"	52.77	0.414
8'-0"	4'- 2"	2'- 0"	1'- 6"	8"	#5	1'-0"	#4	1'-0"	60.19	0.486
9'-0"	4'- 8"	2'- 3"	1'- 9"	8"	#4	6"	#4	6"	81.49	0.535
10'-0"	5'- 2"	2'- 6"	2'- 0"	8"	#5	6"	#4	6"	97.25	0.584
11'-0"	5'- 8"	2'- 9"	2'- 3"	8"	#6	6"	#5	6"	133.65	0.634
12'-0"	6'- 2"	3'- 0"	2'- 6"	9"	#7	6"	#5	6"	162.29	0.721
13'-0"	6'- 8"	3'- 3"	2'- 9"	11"	#7	6"	#5	6"	178.80	0.856
14'-0"	7'- 2"	3'- 6"	3'- 0"	1'- 0"	#8	6"	#5	6"	216.78	0.959
15'-0"	7'- 8"	4'- 0"	3'- 0"	1'- 1"	#9	6"	#6	6"	283.06	1.068
16'-0"	8'- 2"	4'- 6"	3'- 0"	1'- 3"	#9	6"	#6	6"	297.02	1.234

TABLE OF WINGWALL REINFORCING (2~Wings)

Bar	Size	No.	Spa
D	#5	~	1'-0"
E	#4	~	1'-0"
F	#4	~	1'-0"
G	#6	4	~
M	#4	4	~
P	#4	~	1'-0"
R	#5	6	~
V	#4	~	1'-0"

TABLE OF ESTIMATED CULVERT TOEWALL QUANTITIES

Bar	Size	No.	Spa
L	#4	~	1'-6"
Q	#4	1	~
Reinf (Lb/Ft)			2.45
Conc (CY/Ft)			0.037

WING DIMENSION CALCULATIONS:

Formulas: (All values are in Feet)

Hw = H + T + C - 0.250'
A = (Hw - 0.333') (SL)
B = (A) Tangent (30°)
Lw = (A) ÷ Cosine (30°)

For Cast-in-place culverts:

Ltw = (N) (S) + (N + 1) (U)

For Precast culverts:

Ltw = (N) (2U + S) + (N - 1) (0.500')

Total Wingwall Area (Two Wings ~ S.F.) = (Hw + 0.333') (Lw)

Hw = Height of Wingwall
SL:1 = Side Slope Ratio (Horizontal:1 Vertical)
Lw = Length of Wingwall
Ltw = Culvert Toewall Length
N = Number of Culvert Spans

See applicable box culvert standard for H, S, T, and U values.

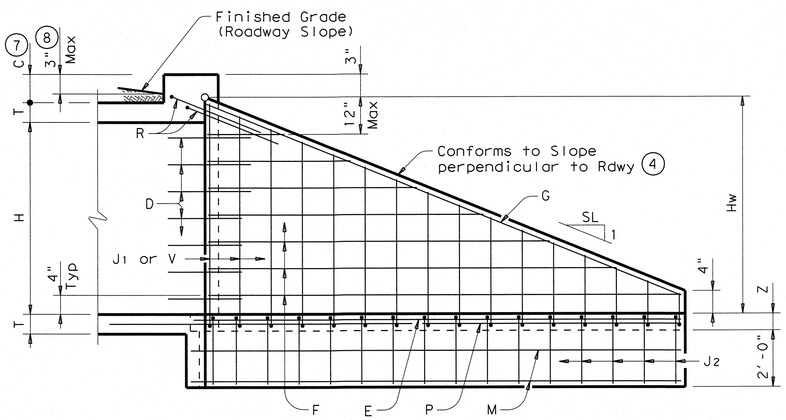

INSIDE ELEVATION
(Showing reinforcing. Culvert and Culvert Toewall reinforcing not shown for clarity.)

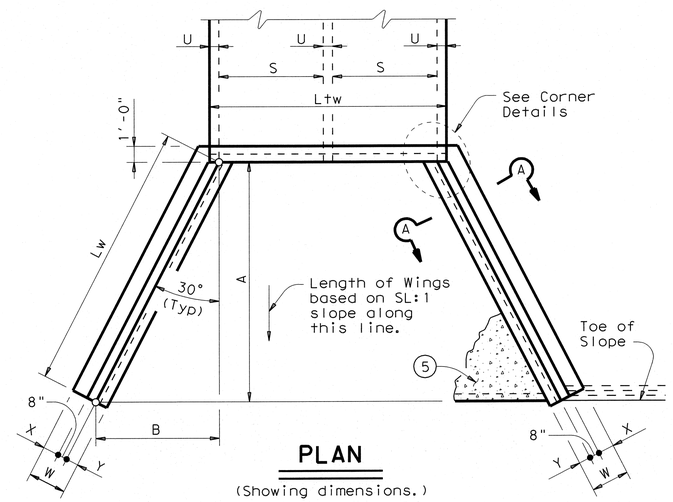

PLAN
(Showing dimensions.)

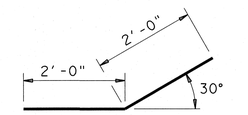

BARS D

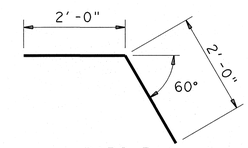

BARS R

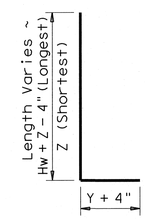

BARS J1

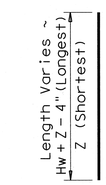

BARS V

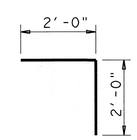

BARS L

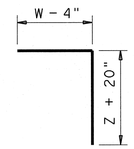

BARS J2

(1) Extend Bars P 3'-0" minimum into bottom slab of Box Culvert.

(2) Adjust to fit as necessary to maintain 1 1/4" clear cover and 4" minimum between bars.

(3) Quantities shown are based on an average wing height for two wings (one structure end). To determine total quantities for two wings multiply the tabulated values by Lw.

(4) Recommended values of Slope are: 2:1, 3:1, 4:1, & 6:1.

(5) When shown elsewhere on the plans, a 5" deep concrete riprap shall be constructed. Unless otherwise shown on the plans or directed by the Engineer, the riprap shall have a 6" wide by 1'-6" deep reinforced concrete toewall along all edges adjacent to natural ground; the toewall shall be reinforced by extending typical riprap reinforcing into the toewall; construction joints or grooved joints, oriented in the direction of flow, shall extend across the full distance of the riprap, at intervals of approximately 20'. When such riprap is provided, the culvert toewall shown in SECTION B-B will not be required. Payment for riprap shall be as required by Item 432, "Riprap".

(6) At Contractor's option, Culvert Toewall may be ended flush with Wingwall Toewall. Adjust reinforcing from that shown as necessary.

(7) 0" min to 5'-0" max. For T6 or C6 Rail, see T6-CM standard for additional details. For all other rail types, refer to the RAC standard. For curbs without rail and greater than 1'-0" high, see ECD standard for additional details. Estimated curb heights are shown elsewhere in the plans.

(8) For vehicle safety, curb heights and wall heights shall be reduced, if necessary, to provide a maximum 3" projection above finished grade. No changes will be made in quantities and no additional compensation will be allowed for this work.

GENERAL NOTES:

Designed according to current AASHTO Standard and Interim Specifications.

All reinforcing steel shall be Grade 60.

All concrete shall be Class "C" and shall have a minimum compressive strength of 3600 psi.

All reinforcing bars shall be adjusted to provide a minimum of 1 1/4" clear cover.

When structure is founded on solid rock, depth of toewalls for culverts and wingwalls may be reduced or eliminated as directed by the Engineer.

See BCS sheet for additional dimensions and information.

The quantities for concrete and reinforcing steel resulting from the formulas given on this sheet are for Contractor's information only.

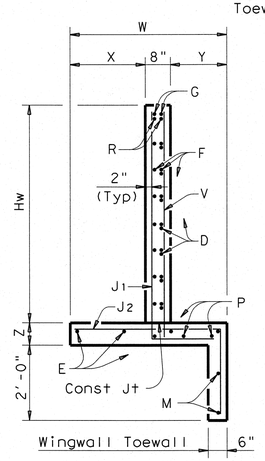

SECTION A-A

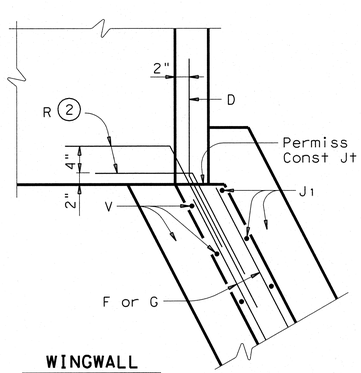

WINGWALL

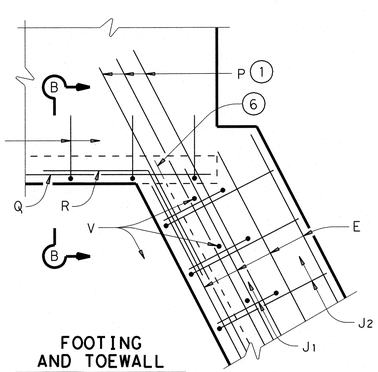

FOOTING AND TOEWALL

CORNER DETAILS
(Culvert and Culvert Toewall reinforcing not shown for clarity.)

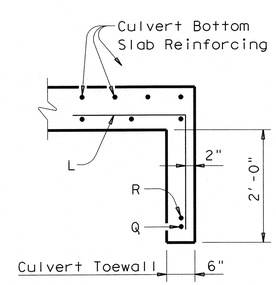

SECTION B-B (5)

Texas Department of Transportation
Bridge Division

CONCRETE WINGWALLS WITH FLARED WINGS FOR 0° SKEW BOX CULVERTS

FW-0

FILE: fw-0stde.dgn	DN: GAF	CK: CAT	DW: TxDOT	CK: GAF
©TxDOT May 2005	DISTRICT	FEDERAL AID PROJECT		SHEET
REVISIONS	COUNTY		CONTROL SECT JOB	HIGHWAY

DISCLAIMER:
The use of this standard is governed by the "Texas Engineering Practice Act". No warranty of any kind is made by TxDOT for any purpose whatsoever. TxDOT assumes no responsibility for the conversion of this standard to other formats or for incorrect results or damages resulting from its use.

COMMENTS:

LEVELS DISPLAYED
1

TABLE OF DIMENSIONS & REINFORCING STEEL
(Wings for One Structure End)

Dimensions					Variable Reinforcing				Estimated Quantities (3) per ft of wing length (2~Wings)	
					Bars J1		Bars J2			
Maximum Wingwall Height Hw	W	X	Y	Z	Size	Spa	Size	Spa	Reinf (Lb/Ft)	Conc (CY/Ft)
2'-6"	2'- 5"	1'- 0"	9"	7"	#4	1'-0"	#4	1'-0"	33.73	0.248
3'-0"	2'- 5"	1'- 0"	9"	7"	#4	1'-0"	#4	1'-0"	37.07	0.261
3'-6"	2'- 5"	1'- 0"	9"	7"	#4	1'-0"	#4	1'-0"	37.74	0.273
4'-0"	2'- 5"	1'- 0"	9"	7"	#4	1'-0"	#4	1'-0"	38.41	0.285
4'-6"	3'- 2"	1'- 6"	1'- 0"	7"	#4	1'-0"	#4	1'-0"	41.75	0.330
5'-0"	3'- 2"	1'- 6"	1'- 0"	7"	#4	1'-0"	#4	1'-0"	45.09	0.343
5'-6"	3'- 2"	1'- 6"	1'- 0"	7"	#4	1'-0"	#4	1'-0"	45.75	0.355
6'-0"	3'- 2"	1'- 6"	1'- 0"	7"	#4	1'-0"	#4	1'-0"	46.42	0.367
7'-0"	3'- 8"	1'- 9"	1'- 3"	7"	#4	1'-0"	#4	1'-0"	52.77	0.414
8'-0"	4'- 2"	2'- 0"	1'- 6"	8"	#5	1'-0"	#4	1'-0"	60.19	0.486
9'-0"	4'- 8"	2'- 3"	1'- 9"	8"	#4	6"	#4	6"	81.49	0.535
10'-0"	5'- 2"	2'- 6"	2'- 0"	8"	#5	6"	#4	6"	97.25	0.584
11'-0"	5'- 8"	2'- 9"	2'- 3"	8"	#6	6"	#5	6"	133.65	0.634
12'-0"	6'- 2"	3'- 0"	2'- 6"	9"	#7	6"	#5	6"	162.29	0.721
13'-0"	6'- 8"	3'- 3"	2'- 9"	11"	#7	6"	#5	6"	178.80	0.856
14'-0"	7'- 2"	3'- 6"	3'- 0"	1'- 0"	#8	6"	#5	6"	216.78	0.959
15'-0"	7'- 8"	4'- 0"	3'- 0"	1'- 1"	#9	6"	#6	6"	283.06	1.068
16'-0"	8'- 2"	4'- 6"	3'- 0"	1'- 3"	#9	6"	#6	6"	297.02	1.234

TABLE OF WINGWALL REINFORCING
(2~Wings)

Bar	Size	No.	Spa
D	#5	~	1'-0"
E	#4	~	1'-0"
F	#4	~	1'-0"
G	#6	4	~
M	#4	4	~
P	#4	~	1'-0"
R	#5	6	~
V	#4	~	1'-0"

TABLE OF ESTIMATED CULVERT TOEWALL QUANTITIES

Bar	Size	No.	Spa
L	#4	~	1'-6"
Q	#4	1	~
Reinf (Lb/Ft)			2.45
Conc (CY/Ft)			0.037

WING DIMENSION CALCULATIONS:

Formulas: (All values are in Feet)

Hw = H + T + C - 0.250'

Lw = (Hw - 0.333') (SL)

For Cast-in-place culverts:

Ltw = (N) (S) + (N + 1) (U)

For Precast culverts:

Ltw = (N) (2U + S) + (N - 1) (0.5')

Total Wingwall Area (Two Wings ~ S.F.) = (Hw + 0.333') (Lw)

Hw = Height of Wingwall
SL:1 = Side Slope Ratio (Horizontal:1 Vertical)
Lw = Length of Wingwall
Ltw = Culvert Toewall Length
N = Number of Culvert Spans

See applicable box culvert standard for H, S, T, and U values.

(1) Extend Bars P 3'-0" minimum into bottom slab of Box Culvert.

(2) Adjust to fit as necessary to maintain 1 1/4" clear cover and 4" minimum between bars.

(3) Quantities shown are based on an average wing height for two wings (one structure end). To determine total quantities for two wings multiply the tabulated values by Lw.

(4) Recommended values of Slope are: 2:1, 3:1, 4:1, & 6:1.

(5) When shown elsewhere on the plans, a 5" deep concrete riprap shall be constructed. Unless otherwise shown on the plans or directed by the Engineer, the riprap shall have a 6" wide by 1'-6" deep reinforced concrete toewall along all edges adjacent to natural ground; the toewall shall be reinforced by extending typical riprap reinforcing into the toewall; construction joints or grooved joints, oriented in the direction of flow, shall extend across the full distance of the riprap, at intervals of approximately 20'. When such riprap is provided, the culvert toewall shown in SECTION B-B will not be required. Payment for riprap shall be as required by Item 432, "Riprap".

(6) At Contractor's option, Culvert Toewall may be ended flush with Wingwall Toewall. Adjust reinforcing from that shown as necessary.

(7) 0" min to 5'-0" max. For T6 or C6 Rail, see T6-CM standard for additional details. For all other rail types, refer to the RAC standard. For curbs without rail and greater than 1'-0" high, see ECD standard for additional details. Estimated curb heights are shown elsewhere in the plans.

(8) For vehicle safety, curb heights and wall heights shall be reduced, if necessary, to provide a maximum 3" projection above finished grade. No changes will be made in quantities and no additional compensation will be allowed for this work.

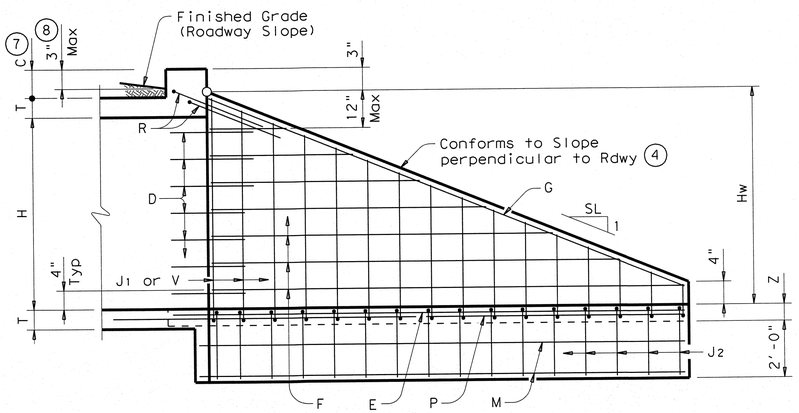

INSIDE ELEVATION

(Showing reinforcing. Culvert and Culvert Toewall reinforcing not shown for clarity.)

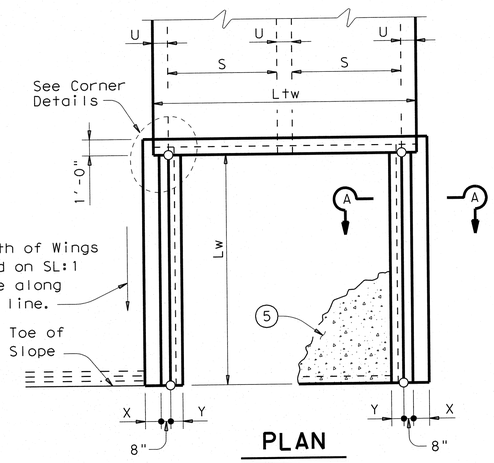

PLAN

(Showing Dimensions)

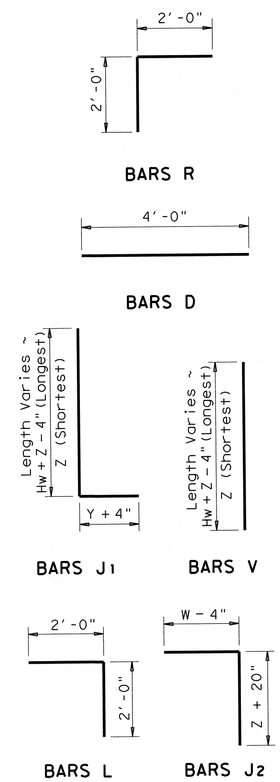

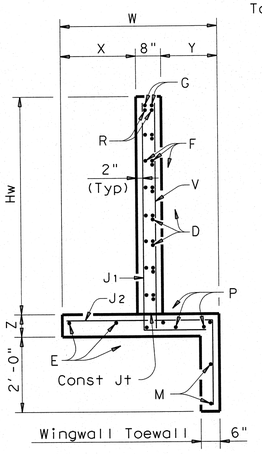

SECTION A-A

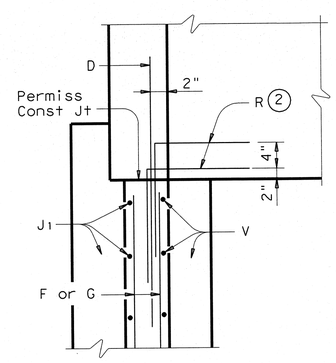

WINGWALL

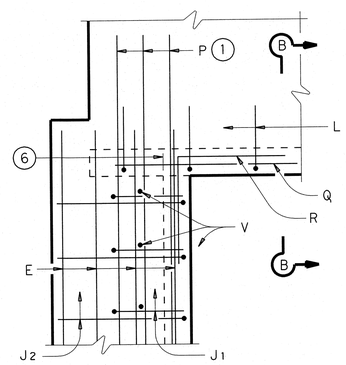

FOOTING AND TOEWALL

CORNER DETAILS

(Culvert and Culvert Toewall reinforcing not shown for clarity.)

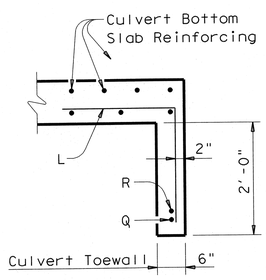

SECTION B-B (5)

GENERAL NOTES:

Designed according to current AASHTO Standard and Interim Specifications.

All reinforcing steel shall be Grade 60.

All concrete shall be Class "C" and shall have a minimum compressive strength of 3600 psi.

All reinforcing bars shall be adjusted to provide a minimum of 1 1/4" clear cover.

When structure is founded on solid rock, depth of toewalls for culverts and wingwalls may be reduced or eliminated as directed by the Engineer.

See BCS sheet for additional dimensions and information.

The quantities for concrete and reinforcing steel resulting from the formulas given on this sheet are for Contractor's information only.

DISCLAIMER:
The use of this standard is governed by the "Texas Engineering Practice Act". No warranty of any kind is made by TxDOT for any purpose whatsoever. TxDOT assumes no responsibility for the conversion of this standard to other formats or for incorrect results or damages resulting from its use.

COMMENTS:

LEVELS DISPLAYED

Texas Department of Transportation
Bridge Division

CONCRETE WINGWALLS WITH STRAIGHT WINGS FOR 0° SKEW BOX CULVERTS

SW-0

FILE: sw-0stde.dgn	DN: GAF	CK: CAT	DW: TxDOT	CK: GAF
© TxDOT May 2005	DISTRICT	FEDERAL AID PROJECT		SHEET
REVISIONS				
	COUNTY	CONTROL	SECT	JOB	HIGHWAY

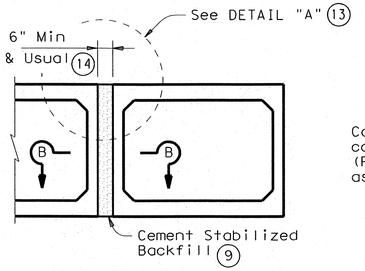

MULTIPLE UNIT PLACEMENT

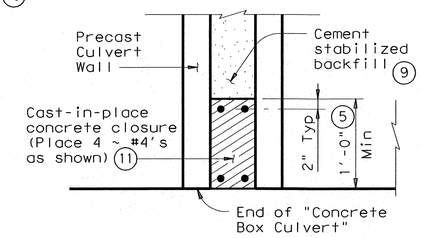

SECTION B-B

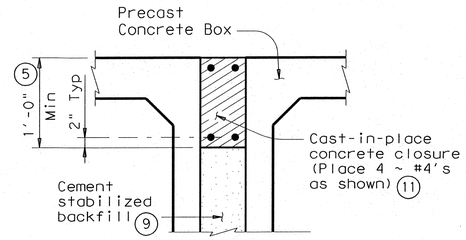

DETAIL "A" (13)

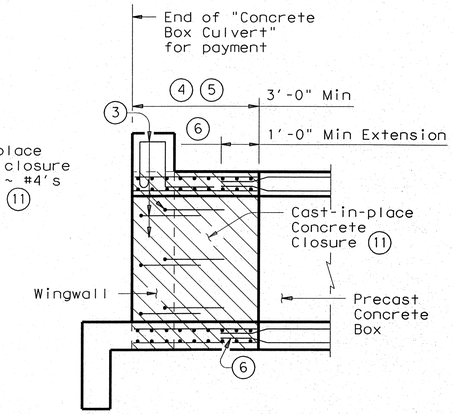

WINGWALL CONNECTION

(Also applies to Safety End Treatment)

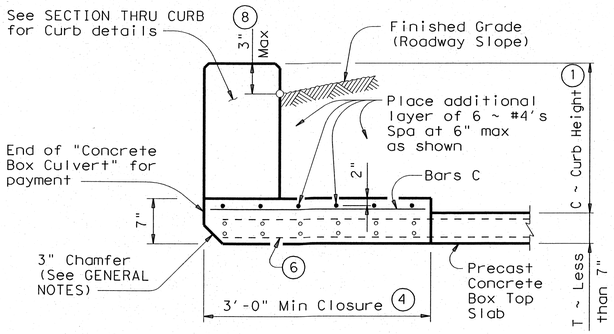

SECTION THRU TOP SLABS LESS THAN 7"

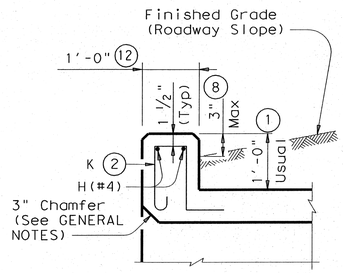

SECTION THRU CURB

(10) QUANTITIES PER FOOT OF CURB	
Reinforcing Steel	4.18 Lb
Concrete	0.037 CY

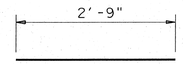

BARS C ~ #4
(Spa = 1'-0" Max)

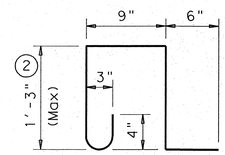

BARS K ~ #4
(Spa = 1'-0" Max)
(Length = 4'-3")

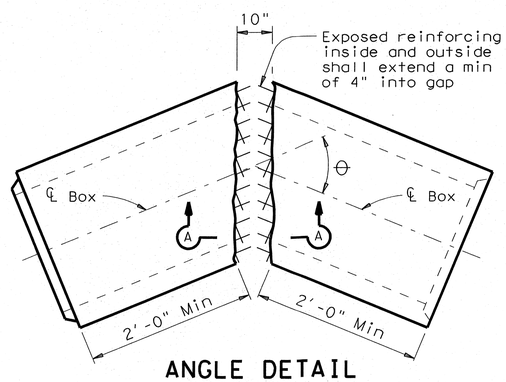

ANGLE DETAIL

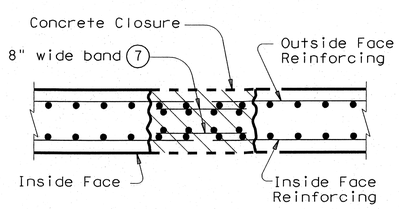

SECTION A-A

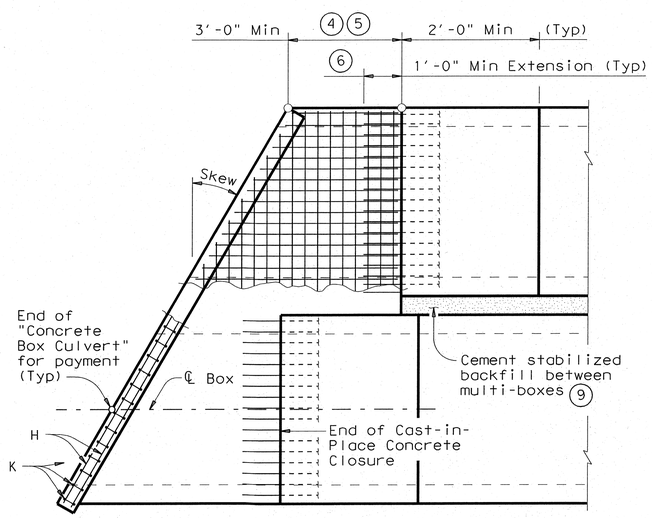

PLAN OF SKEWED ENDS

(Showing multi-box placement)

(1) 0" min to 5'-0" max. Estimated curb heights are shown elsewhere in the plans. For structures without railing and curbs taller than 1'-0", refer to ECD standard. For structures with T6 bridge rail, refer to T6-CM standard. For structures with bridge rail, other than T6, refer to RAC standard.

(2) For curbs less than 1'-0" high, tilt Bars K or reduce bar height as necessary to maintain cover. For curbs less than 3" high, Bars K may be omitted.

(3) Curb, Wingwall or Safety End Treatment reinforcing shall extend into concrete closure. Any reinforcing that does not fit into the closure shall be bent or trimmed as necessary.

(4) Cast-in-place concrete closure shall be 3'-0" min. Boxes shall be cast short or broken back in the field. All reinforcing in the closure shall be the same size and spacing as in the precast box section. Except where shown otherwise, the cast-in-place closure shall be flush with the inside and outside faces of the precast box section.

(5) For multiple unit placements the length of the closure for the interior walls may be adjusted as necessary. The length of the top slab, bottom slab, and exterior wall closure shall not be less than 3'-0". See Section B-B detail when interior walls are cast full length.

(6) Precast box reinforcing shall extend a minimum of 1'-0" into concrete closure (Typ).

(7) Bands of reinforcing matching the inside and outside face reinforcing shall be placed in the gaps of the top and bottom slabs. A band matching the outside face reinforcing of the wall shall be placed in the gaps of the walls (placed in the outside face only). The bands shall be tack welded to the exposed reinforcing at each point of contact.

(8) For vehicle safety, the following requirements must be met:
- For structures without bridge rail, curbs shall project no more than 3" above finished grade.
- For structures with bridge rail, curbs shall be flush with finished grade.

Curb heights shall be reduced, if necessary, to meet the above requirements. No changes will be made in quantities and no additional compensation will be allowed for this work.

(9) Cement Stabilized Backfill between boxes is considered part of the Box Culvert for payment.

(10) All curb concrete and reinforcing is considered part of the Box Culvert for payment.

(11) Any additional concrete and reinforcing required for the closures shall be considered as subsidiary to the Concrete Box Culvert.

(12) 1'-0" typical. 2'-0" when RAC standard is referred to elsewhere in the plans.

(13) For multiple unit placement with overlay, with 1 to 2 course surface treatment, or with the top slab as the final riding surface, provide wall closure as shown in DETAIL "A".

(14) This dimension may be increased with approval of the Engineer to allow the precast boxes to be tunneled or jacked in accordance with Item 476, "Jacking, Boring, or Tunneling Pipe or Box". No payment will be made for any additional material in the gap between adjacent boxes.

GENERAL NOTES:

Designed according to current AASHTO Standard and Interim Specifications.

All closure concrete shall be Class "C" with a minimum compressive strength of 3600 psi and shall be placed according to the Item, "Concrete Structures".

Any additional concrete required for the closures shall be considered as subsidiary to the Concrete Box Culvert.

Refer to the Single Box Culverts Precast standard for details not shown.

The bottom edge of the top slab closure shall be chamfered 3 inches at the entrance.

HS20 LOADING

DISCLAIMER:
The use of this standard is governed by the "Texas Engineering Practice Act". No warranty of any kind is made by TxDOT for any purpose whatsoever. TxDOT assumes no responsibility for the conversion of this standard to other formats or for incorrect results or damages resulting from its use.

ACC:

LEVELS DISPLAYED

1

Texas Department of Transportation
Bridge Division

BOX CULVERTS PRECAST MISCELLANEOUS DETAILS

SCP-MD

FILE: scpmdste.dgn	DN: GAF	CK: LMW	DW: BWH/TxDOT	CK: GAF
© TxDOT May 2005	DISTRICT	FEDERAL AID PROJECT		SHEET
REVISIONS				
08-07: Bars H size.	COUNTY	CONTROL	SECT	JOB	HIGHWAY

DISCLAIMER:
The use of this standard is governed by the "Texas Engineering Practice Act". No warranty of any kind is made by TxDOT for any purpose whatsoever. TxDOT assumes no responsibility for the conversion of this standard to other formats or for incorrect results or damages resulting from its use.

BOX DATA

SECTION DIMENSIONS S (ft)	H (ft)	T_T (in)	T_B (in)	T_S (in)	Fill Height (ft)	M (Min) (in)	REINFORCING (in²/ft) ② A_{S1}	A_{S2}	A_{S3}	A_{S4}	A_{S5}	A_{S6}	A_{S7}	A_{S8}	① Lift Weight (Tons)
7	4	8	8	8	<2	-	0.26	0.49	0.21	0.19	0.19	0.19	0.19	0.19	10.4
7	4	8	8	8	2<3	47	0.24	0.33	0.22	0.19	-	-	-	-	10.4
7	4	8	8	8	3-5	43	0.19	0.19	0.19	0.19	-	-	-	-	10.4
7	4	8	8	8	10	43	0.19	0.25	0.25	0.19	-	-	-	-	10.4
7	4	8	8	8	15	41	0.26	0.34	0.35	0.19	-	-	-	-	10.4
7	4	8	8	8	20	41	0.33	0.44	0.45	0.19	-	-	-	-	10.4
7	4	8	8	8	25	41	0.40	0.54	0.55	0.19	-	-	-	-	10.4
7	4	8	8	8	30	41	0.47	0.64	0.65	0.19	-	-	-	-	10.4
7	4	8	8	8	35	41	0.55	0.75	0.75	0.19	-	-	-	-	10.4
7	5	8	8	8	<2	-	0.23	0.52	0.24	0.19	0.21	0.19	0.19	0.19	11.2
7	5	8	8	8	2<3	59	0.22	0.36	0.25	0.19	-	-	-	-	11.2
7	5	8	8	8	3-5	43	0.19	0.20	0.20	0.19	-	-	-	-	11.2
7	5	8	8	8	10	43	0.19	0.27	0.28	0.19	-	-	-	-	11.2
7	5	8	8	8	15	41	0.23	0.37	0.38	0.19	-	-	-	-	11.2
7	5	8	8	8	20	41	0.29	0.48	0.49	0.19	-	-	-	-	11.2
7	5	8	8	8	25	41	0.35	0.58	0.59	0.19	-	-	-	-	11.2
7	5	8	8	8	30	41	0.41	0.69	0.70	0.19	-	-	-	-	11.2
7	5	8	8	8	35	41	0.47	0.80	0.81	0.19	-	-	-	-	11.2
7	6	8	8	8	<2	-	0.21	0.54	0.26	0.19	0.22	0.19	0.19	0.19	12.0
7	6	8	8	8	2<3	59	0.20	0.39	0.27	0.19	-	-	-	-	12.0
7	6	8	8	8	3-5	47	0.19	0.22	0.22	0.19	-	-	-	-	12.0
7	6	8	8	8	10	43	0.19	0.28	0.30	0.19	-	-	-	-	12.0
7	6	8	8	8	15	41	0.20	0.39	0.40	0.19	-	-	-	-	12.0
7	6	8	8	8	20	41	0.26	0.50	0.51	0.19	-	-	-	-	12.0
7	6	8	8	8	25	41	0.31	0.61	0.62	0.19	-	-	-	-	12.0
7	6	8	8	8	30	41	0.36	0.72	0.73	0.19	-	-	-	-	12.0
7	6	8	8	8	35	41	0.42	0.83	0.85	0.19	-	-	-	-	12.0
7	7	8	8	8	<2	-	0.19	0.56	0.27	0.19	0.22	0.19	0.19	0.19	12.8
7	7	8	8	8	2<3	59	0.19	0.41	0.29	0.19	-	-	-	-	12.8
7	7	8	8	8	3-5	59	0.19	0.23	0.23	0.19	-	-	-	-	12.8
7	7	8	8	8	10	47	0.19	0.29	0.31	0.19	-	-	-	-	12.8
7	7	8	8	8	15	43	0.19	0.40	0.42	0.19	-	-	-	-	12.8
7	7	8	8	8	20	41	0.24	0.51	0.53	0.19	-	-	-	-	12.8
7	7	8	8	8	25	41	0.28	0.62	0.64	0.19	-	-	-	-	12.8
7	7	8	8	8	30	41	0.33	0.73	0.75	0.19	-	-	-	-	12.8
7	7	8	8	8	35	41	0.38	0.84	0.87	0.19	-	-	-	-	12.8
7	3	8	8	8	<2	-	0.28	0.36	0.24	0.19	0.21	0.19	0.19	0.19	9.6
7	3	8	8	8	30	58	0.53	0.49	0.50	0.19	-	-	-	-	9.6

⑤

① For Box Length = 8'-0"

② A_{S1} thru A_{S4}, A_{S7} and A_{S8} are minimum required areas of reinforcement per linear foot of box length. A_{S6} and A_{S5} are minimum required areas of reinforcement per linear foot of box width.

⑤ These designs were created by TxDOT and are not shown in the ASTM Specifications.

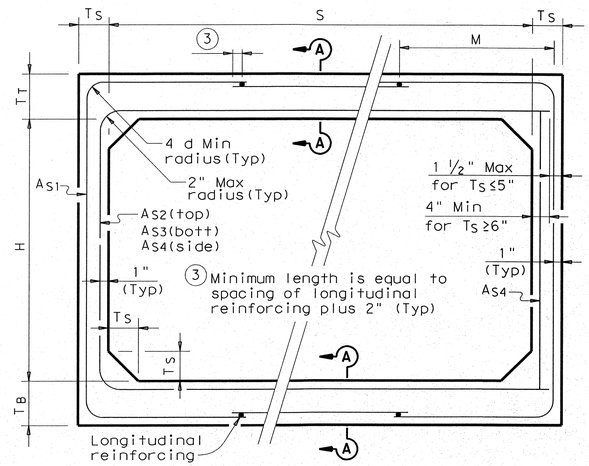

CORNER OPTION "A" CORNER OPTION "B"

FILL HEIGHT 2 FT AND GREATER

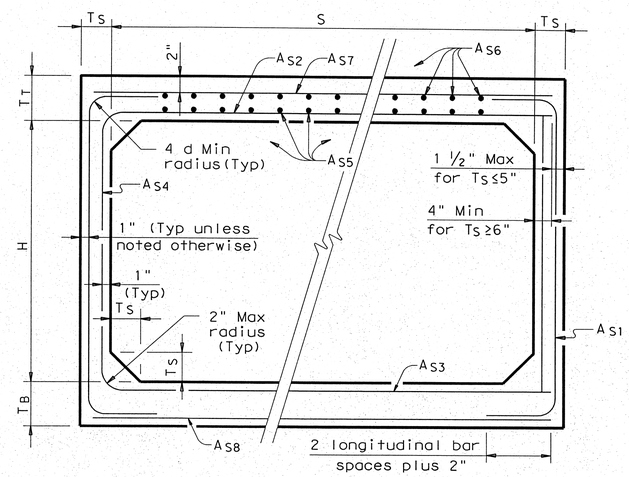

CORNER OPTION "A" CORNER OPTION "B"

FILL HEIGHT LESS THAN 2 FT

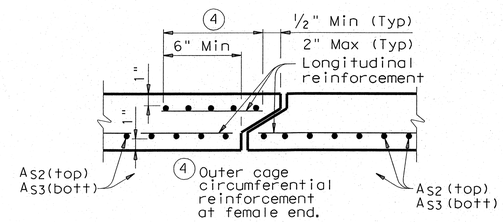

SECTION A-A

(TOP AND BOTTOM SLAB JOINT REINFORCEMENT)

GENERAL NOTES:

Designs shown conform to ASTM C1433.

Refer to ASTM C1433 for information or details not shown.

All concrete shall be Class "H" Concrete with a minimum compressive strength of 5,000 psi.

See SCP-MD standard sheet for miscellaneous details and notes not shown.

In lieu of furnishing the designs shown on this sheet, the contractor may furnish an alternate design that is equal to or exceeds the box design for the design fill height in the table. Shop plans for alternate designs shall be submitted in accordance with Item "Precast Concrete Structures".

HS20 LOADING

Texas Department of Transportation
Bridge Division

SINGLE BOX CULVERTS PRECAST

7'-0" SPAN

SCP-7

FILE: scp07ste.dgn	DN: GAF	CK: LMW	DW: BWH/TxDOT	CK: GAF
© TxDOT May 2005	DISTRICT	FEDERAL AID PROJECT		SHEET
REVISIONS 06-06 ~ Revised reinforcing. 08-07 ~ General notes.	COUNTY		CONTROL / SECT / JOB	HIGHWAY

LEVELS DISPLAYED 1 ACC:

BOX DATA

SECTION DIMENSIONS S (ft)	H (ft)	T_T (in)	T_B (in)	T_S (in)	Fill Height (ft)	M (Min) (in)	REINFORCING (in^2/ft) ② A_{S1}	A_{S2}	A_{S3}	A_{S4}	A_{S5}	A_{S6}	A_{S7}	A_{S8}	① Lift Weight (Tons)
8	4	8	8	8	<2	-	0.31	0.53	0.23	0.19	0.20	0.19	0.19	0.19	11.2
8	4	8	8	8	2<3	50	0.30	0.39	0.25	0.19	-	-	-	-	11.2
8	4	8	8	8	3-5	45	0.20	0.22	0.22	0.19	-	-	-	-	11.2
8	4	8	8	8	10	45	0.27	0.31	0.32	0.19	-	-	-	-	11.2
8	4	8	8	8	15	41	0.37	0.43	0.44	0.19	-	-	-	-	11.2
8	4	8	8	8	20	41	0.47	0.56	0.57	0.19	-	-	-	-	11.2
8	4	8	8	8	25	41	0.58	0.68	0.69	0.19	-	-	-	-	11.2
8	5	8	8	8	<2	-	0.28	0.57	0.25	0.19	0.21	0.19	0.19	0.19	12.0
8	5	8	8	8	2<3	50	0.27	0.42	0.28	0.19	-	-	-	-	12.0
8	5	8	8	8	3-5	50	0.19	0.24	0.24	0.19	-	-	-	-	12.0
8	5	8	8	8	10	45	0.24	0.33	0.35	0.19	-	-	-	-	12.0
8	5	8	8	8	15	41	0.33	0.46	0.48	0.19	-	-	-	-	12.0
8	5	8	8	8	20	41	0.42	0.60	0.61	0.19	-	-	-	-	12.0
8	5	8	8	8	25	41	0.51	0.73	0.75	0.19	-	-	-	-	12.0
8	6	8	8	8	<2	-	0.26	0.59	0.28	0.19	0.22	0.19	0.19	0.19	12.8
8	6	8	8	8	2<3	55	0.25	0.45	0.30	0.19	-	-	-	-	12.8
8	6	8	8	8	3-5	50	0.19	0.26	0.26	0.19	-	-	-	-	12.8
8	6	8	8	8	10	45	0.22	0.35	0.37	0.19	-	-	-	-	12.8
8	6	8	8	8	15	41	0.30	0.49	0.51	0.19	-	-	-	-	12.8
8	6	8	8	8	20	41	0.38	0.63	0.65	0.19	-	-	-	-	12.8
8	6	8	8	8	25	41	0.46	0.77	0.79	0.19	-	-	-	-	12.8
8	7	8	8	8	<2	-	0.24	0.62	0.30	0.19	0.23	0.19	0.19	0.19	13.6
8	7	8	8	8	2<3	65	0.23	0.47	0.33	0.19	-	-	-	-	13.6
8	7	8	8	8	3-5	55	0.19	0.27	0.28	0.19	-	-	-	-	13.6
8	7	8	8	8	10	45	0.20	0.37	0.39	0.19	-	-	-	-	13.6
8	7	8	8	8	15	41	0.28	0.51	0.53	0.19	-	-	-	-	13.6
8	7	8	8	8	20	41	0.35	0.65	0.68	0.19	-	-	-	-	13.6
8	7	8	8	8	25	41	0.42	0.80	0.82	0.19	-	-	-	-	13.6
8	8	8	8	8	<2	-	0.22	0.64	0.32	0.19	0.24	0.19	0.19	0.19	14.4
8	8	8	8	8	2<3	65	0.22	0.49	0.35	0.19	-	-	-	-	14.4
8	8	8	8	8	3-5	65	0.19	0.29	0.30	0.19	-	-	-	-	14.4
8	8	8	8	8	10	50	0.19	0.38	0.41	0.19	-	-	-	-	14.4
8	8	8	8	8	15	45	0.26	0.52	0.55	0.19	-	-	-	-	14.4
8	8	8	8	8	20	45	0.33	0.66	0.70	0.19	-	-	-	-	14.4
8	8	8	8	8	25	41	0.40	0.81	0.84	0.19	-	-	-	-	14.4

① For Box Length = 8'-0"

② A_{S1} thru A_{S4}, A_{S7} and A_{S8} are minimum required areas of reinforcement per linear foot of box length. A_{S6} and A_{S5} are minimum required areas of reinforcement per linear foot of box width.

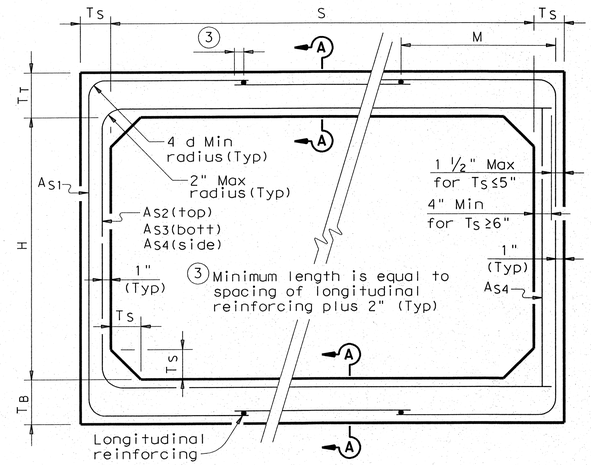

CORNER OPTION "A" CORNER OPTION "B"

FILL HEIGHT 2 FT AND GREATER

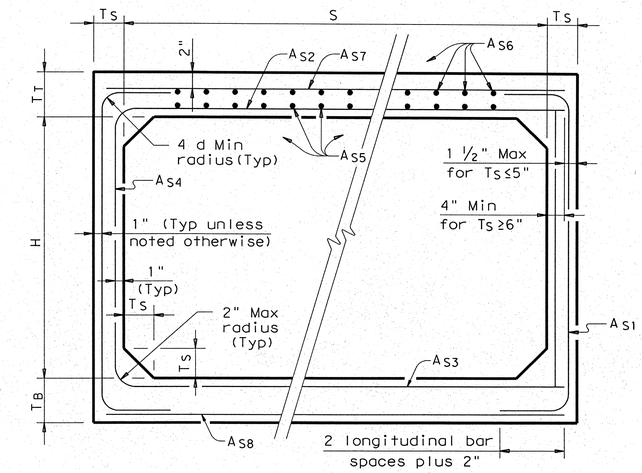

CORNER OPTION "A" CORNER OPTION "B"

FILL HEIGHT LESS THAN 2 FT

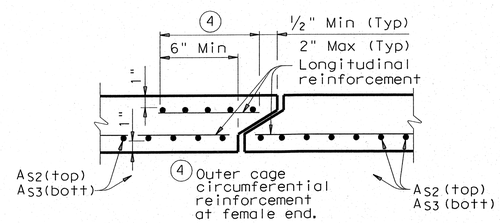

SECTION A-A

(TOP AND BOTTOM SLAB JOINT REINFORCEMENT)

GENERAL NOTES:

Designs shown conform to ASTM C1433. Refer to ASTM C1433 for information or details not shown.

All concrete shall be Class "H" Concrete with a minimum compressive strength of 5,000 psi.

See SCP-MD standard sheet for miscellaneous details and notes not shown.

In lieu of furnishing the designs shown on this sheet, the contractor may furnish an alternate design that is equal to or exceeds the box design for the design fill height in the table. Shop plans for alternate designs shall be submitted in accordance with Item "Precast Concrete Structures".

HS20 LOADING

Texas Department of Transportation
Bridge Division

SINGLE BOX CULVERTS PRECAST

8'-0" SPAN

SCP-8

FILE: scp08ste.dgn	DN: GAF	CK: LMW	DW: BWH/TxDOT	CK: GAF
© TxDOT May 2005	DISTRICT	FEDERAL AID PROJECT		SHEET
REVISIONS 06-06 - Revised reinforcing. 08-07 - General notes.	COUNTY		CONTROL SECT JOB	HIGHWAY

DISCLAIMER:
The use of this standard is governed by the "Texas Engineering Practice Act". No warranty of any kind is made by TxDOT for any purpose whatsoever. TxDOT assumes no responsibility for the conversion of this standard to other formats or for incorrect results or damages resulting from its use.

ACC:

LEVELS DISPLAYED